KRUGER

Spring Vibration Isolator



General Specification

Unless otherwise noted on the equipment schedule, all mechanical equipment (fans) shall be mounted on vibration isolators to prevent the transmission of vibration and mechanical transmitted sound to the building structure. Vibration isolators shall be selected in accordance with the weight distribution so as to produce reasonably uniform deflection.

Kruger Spring Vibration Isolator is design of free-standing, laterally stable without any house, single steel spring specially design to use with Kruger fan series.

Consist of spring mounting caps assembled with level adjustment bolts and locking screws, steel spring and molded non-skid neoprene base is available with 25 mm deflection type (SBA Series) and 50 mm deflection type (SBB Series).

Application

Kruger spring vibration isolator is recommended for use to isolating floor mounting sources of noise and vibration located near critically quiet area. They are typically used to reduce the transmission of noise and vibration from low speed mechanical equipments (fans) into a building structure.

Typical Installation

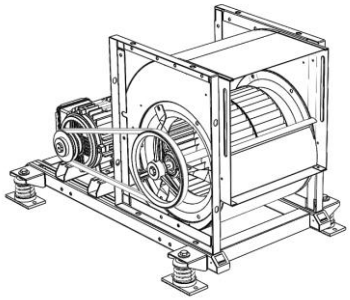

Centrifugal fan

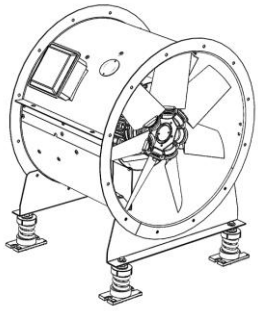

Axial fan

Deflection

Deflection is the change in a flexible element's unloaded to loaded height.

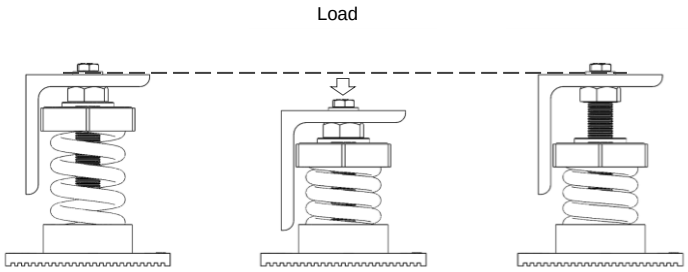

KRUGER

25mm Deflection Type

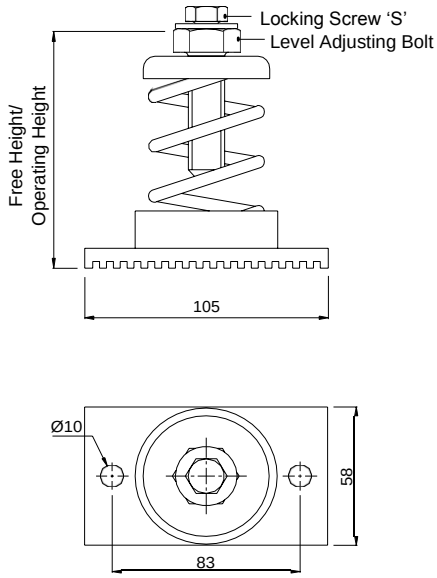

Model	Rated Load		Spring Rate (kg/mm)	Dimension (mm)		
	(kg)	(lbs)		Free Height/ Opt. Height	Spring O.D.	S
SBA-A03	3	6.6	0.116	95	Ø 51	M10 x 25
SBA-A04	4	8.8	0.166	95	Ø 51	M10 x 25
SBA-A05	5	11.0	0.199	95	Ø 51	M10 x 25
SBA-A06	6	13.2	0.237	95	Ø 51	M10 x 25
SBA-A08	8	17.6	0.320	95	Ø 51	M10 x 25
SBA-A10	10	22.0	0.407	95	Ø 51	M10 x 25
SBA-A13	13	28.6	0.526	95	Ø 51	M10 x 25
SBA-A16	16	35.2	0.645	95	Ø 51	M10 x 25
SBA-A20	20	44.0	0.773	95	Ø 51	M10 x 25
SBA-A25	25	55.0	1.03	95	Ø 51	M10 x 25
SBA-A32	32	70.4	1.30	95	Ø 51	M10 x 25
SBA-A40	40	88.0	1.65	95	Ø 51	M10 x 25
SBA-A50	50	110	2.03	95	Ø 51	M10 x 25
SBA-A63	63	138.6	2.63	95	Ø 51	M10 x 25
SBA-A80	80	176	3.21	95	Ø 51	M10 x 25
SBA-A100	100	220	3.87	95	Ø 51	M10 x 25
SBA-A125	125	275	5.21	95	Ø 51	M10 x 25
SBA-A160	160	352	6.79	95	Ø 51	M10 x 25
SBA-A200	200	440	8.69	95	Ø 51	M10 x 25

25mm Deflection Type

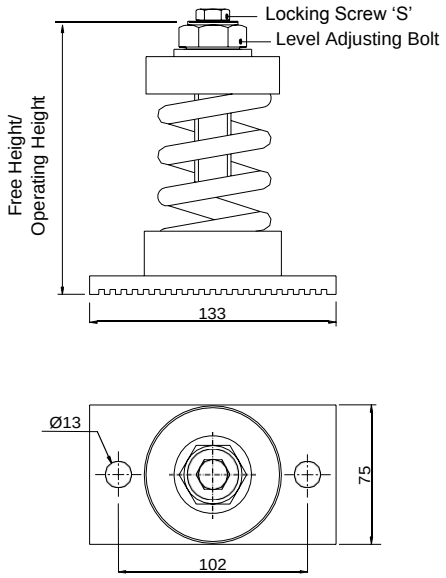

Model	Rated Load		Spring Rate (kg/mm)	Dimension (mm)		
	(kg)	(lbs)		Free Height/ Opt. Height	Spring O.D.	S
SBA-B13	13	28.6	0.527	145	Ø 60.3	M10 x 25
SBA-B16	16	35.2	0.643	145	Ø 60.3	M10 x 25
SBA-B20	20	44.0	0.769	145	Ø 60.3	M10 x 25
SBA-B25	25	55.0	1.00	145	Ø 60.3	M10 x 25
SBA-B32	32	70.4	1.27	145	Ø 60.3	M10 x 25
SBA-B40	40	88.0	1.53	145	Ø 60.3	M10 x 25
SBA-B50	50	110	2.04	145	Ø 60.3	M10 x 25
SBA-B63	63	138.6	2.62	145	Ø 60.3	M10 x 25
SBA-B80	80	176	3.39	145	Ø 60.3	M10 x 25
SBA-B100	100	220	4.03	145	Ø 60.3	M10 x 25
SBA-B125	125	275	5.25	145	Ø 60.3	M10 x 25
SBA-B160	160	352	7.05	145	Ø 60.3	M10 x 25
SBA-B200	200	440	8.57	145	Ø 60.3	M10 x 25
SBA-B250	250	550	10.8	145	Ø 60.3	M10 x 25
SBA-B315	315	693	13.2	145	Ø 60.3	M10 x 25
SBA-B400	400	880	17.9	145	Ø 60.3	M10 x 25
SBA-B500	500	1100	21.5	145	Ø 60.3	M10 x 25
SBA-B630	630	1386	26.9	145	Ø 60.3	M10 x 25

KRUGER

50mm Deflection Type

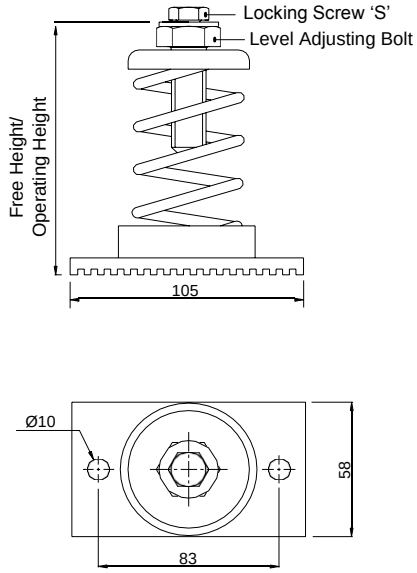

Model	Rated Load		Spring Rate (kg/mm)	Dimension (mm)		
	(kg)	(lbs)		Free Height/ Opt. Height	Spring O.D.	S
SBB-A06	6	13.2	0.113	120	Ø 51	M10 x 25
SBB-A08	8	17.6	0.157	120	Ø 51	M10 x 25
SBB-A10	10	22.0	0.192	120	Ø 51	M10 x 25
SBB-A13	13	28.6	0.269	120	Ø 51	M10 x 25
SBB-A16	16	35.2	0.304	120	Ø 51	M10 x 25
SBB-A20	20	44.0	0.401	120	Ø 51	M10 x 25
SBB-A25	25	55	0.496	120	Ø 51	M10 x 25
SBB-A32	32	70.4	0.654	120	Ø 51	M10 x 25
SBB-A40	40	88	0.809	120	Ø 51	M10 x 25
SBB-A50	50	110	1.03	120	Ø 51	M10 x 25
SBB-A63	63	138.6	1.30	120	Ø 51	M10 x 25
SBB-A80	80	176	1.63	120	Ø 51	M10 x 25
SBB-A100	100	220	2.07	120	Ø 51	M10 x 25

50mm Deflection Type

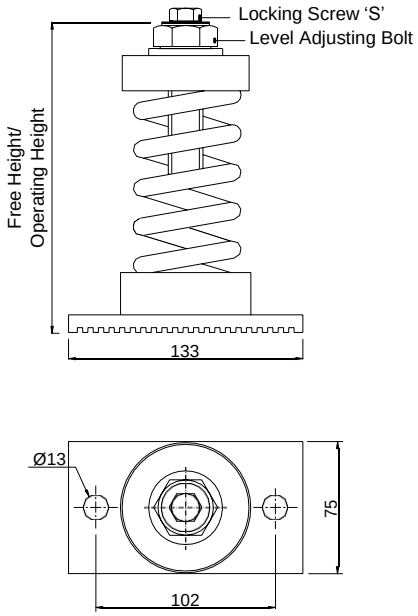

Model	Rated Load		Spring Rate (kg/mm)	Dimension (mm)		
	(kg)	(lbs)		Free Height/ Opt. Height	Spring O.D.	S
SBB-B32	32	70.4	0.658	155	Ø 60.3	M10 x 25
SBB-B40	40	88	0.825	155	Ø 60.3	M10 x 25
SBB-B50	50	110.0	1.07	155	Ø 60.3	M10 x 25
SBB-B63	63	138.6	1.34	155	Ø 60.3	M10 x 25
SBB-B80	80	176	1.64	155	Ø 60.3	M10 x 25
SBB-B100	100	220.0	2.03	155	Ø 60.3	M10 x 25
SBB-B125	125	275	2.74	155	Ø 60.3	M10 x 25
SBB-B160	160	352	3.42	155	Ø 60.3	M10 x 25
SBB-B200	200	440	4.27	155	Ø 60.3	M10 x 25
SBB-B250	250	550	5.18	155	Ø 60.3	M10 x 25
SBB-B315	315	693	6.28	155	Ø 60.3	M10 x 25
SBB-B400	400	880	9.27	155	Ø 60.3	M10 x 25
SBB-B500	500	1100	10.5	155	Ø 60.3	M10 x 25
SBB-B630	630	1386	12.8	155	Ø 60.3	M10 x 25

The company is always improving and developing its products, therefore the company reserves the right of making changes to the illustrated products. Certified dimension can be provided upon request.

LEA059.E0 January 2018
Edition 4
Printed in January 2018

KRUGER VENTILATION INDUSTRIES ASIA CO LTD
- 30/159 Moo 1, Sinsakorn Industrial Estate, Chetsadawithi road, Khok Kham, Mueng, Samutsakorn 74000, Thailand
- Tel +662 1054298 - Fax+662 0248256-9
- www.krugerfan.com

A member of Soler&Palau Ventilation Group