KRUGER

Spring Vibration Isolator

(Hanger type)



General Specification

Spring hangers with rubber element are required for suspended mechanical equipment to isolate vibration, absorb noise and accommodate expansion & contraction without excessive stress or misalignment in support system.

Selection of Hanger shall be in accordance with weight and force distribution so as to result in reasonably uniform deflection.

Kruger Spring Vibration Isolator – hanger type is available for 25mm, 50mm deflect with load range from 3 kg to 630 kg. Consist of a free-standing, laterally stable steel spring, load transfer mounting caps with neoprene base. And neoprene element in series assembled in a steel frame.

Application

Kruger Spring Vibration Isolator – hanger type is specially designed for used to isolate suspended source of both audible and inaudible noise and vibration. They are typically used to reduce the transmission of noise and vibration from low speed mechanical equipments (fans) into a building structure.

Typical Installation

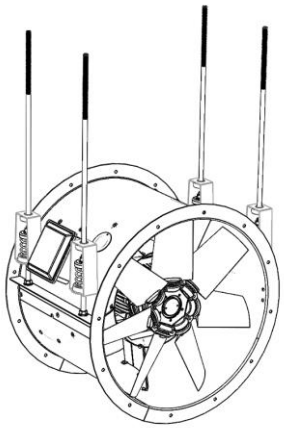

Axial fan

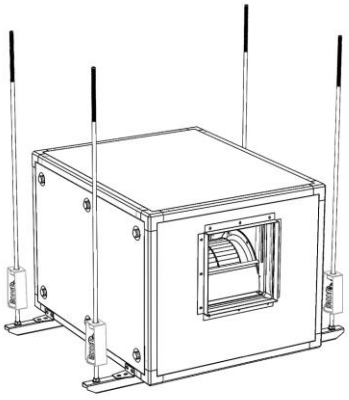

In-line fan

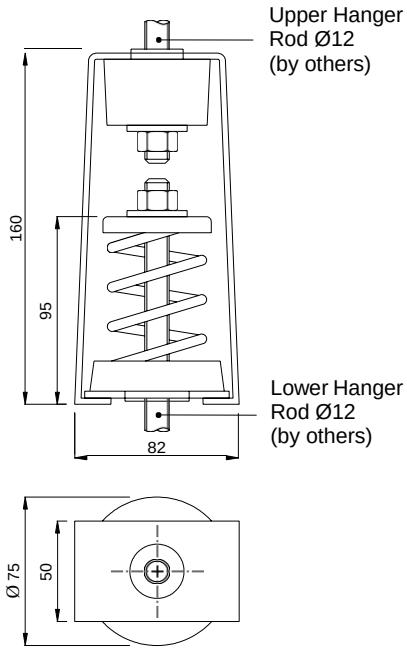

25mm Deflection Type

Model	Rated Load		Spring Rate (kg/mm)	Spring O.D.
	(kg)	(lbs)		
SHA-A03	3	6.6	0.116	Ø 51
SHA-A04	4	8.8	0.166	Ø 51
SHA-A05	5	11.0	0.199	Ø 51
SHA-A06	6	13.2	0.237	Ø 51
SHA-A08	8	17.6	0.320	Ø 51
SHA-A10	10	22.0	0.407	Ø 51
SHA-A13	13	28.6	0.526	Ø 51
SHA-A16	16	35.2	0.645	Ø 51
SHA-A20	20	44.0	0.773	Ø 51
SHA-A25	25	55.0	1.03	Ø 51
SHA-A32	32	70.4	1.30	Ø 51
SHA-A40	40	88.0	1.65	Ø 51
SHA-A50	50	110	2.03	Ø 51
SHA-A63	63	138.6	2.63	Ø 51
SHA-A80	80	176	3.21	Ø 51
SHA-A100	100	220	3.87	Ø 51
SHA-A125	125	275	5.21	Ø 51
SHA-A160	160	352	6.79	Ø 51
SHA-A200	200	440	8.69	Ø 51

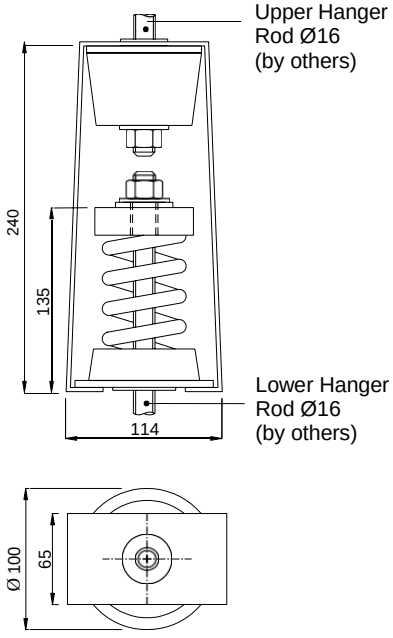

25mm Deflection Type

Model	Rated Load		Spring Rate (kg/mm)	Spring O.D.
	(kg)	(lbs)		
SHA-B13	13	28.6	0.527	Ø 60.3
SHA-B16	16	35.2	0.643	Ø 60.3
SHA-B20	20	44.0	0.769	Ø 60.3
SHA-B25	25	55.0	1.00	Ø 60.3
SHA-B32	32	70.4	1.27	Ø 60.3
SHA-B40	40	88.0	1.53	Ø 60.3
SHA-B50	50	110	2.04	Ø 60.3
SHA-B63	63	138.6	2.62	Ø 60.3
SHA-B80	80	176	3.39	Ø 60.3
SHA-B100	100	220	4.03	Ø 60.3
SHA-B125	125	275	5.25	Ø 60.3
SHA-B160	160	352	7.05	Ø 60.3
SHA-B200	200	440	8.57	Ø 60.3
SHA-B250	250	550	10.8	Ø 60.3
SHA-B315	315	693	13.2	Ø 60.3
SHA-B400	400	880	17.9	Ø 60.3
SHA-B500	500	1100	21.5	Ø 60.3
SHA-B630	630	1386	26.9	Ø 60.3

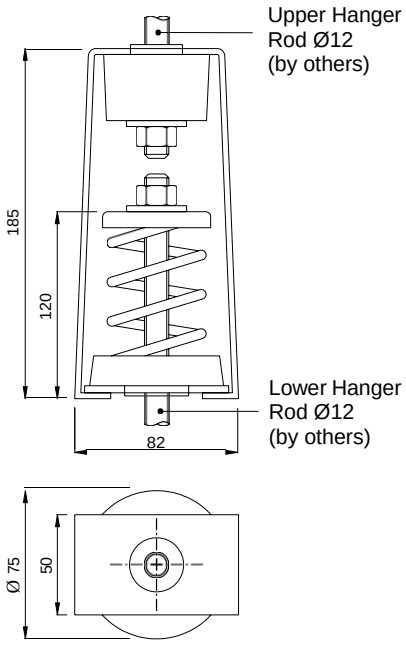

50mm Deflection Type

Model	Rated Load		Spring Rate (kg/mm)	Spring O.D.
	(kg)	(lbs)		
SHB-A06	6	13.2	0.113	Ø 51
SHB-A08	8	17.6	0.157	Ø 51
SHB-A10	10	22.0	0.192	Ø 51
SHB-A13	13	28.6	0.269	Ø 51
SHB-A16	16	35.2	0.304	Ø 51
SHB-A20	20	44.0	0.401	Ø 51
SHB-A25	25	55	0.496	Ø 51
SHB-A32	32	70.4	0.654	Ø 51
SHB-A40	40	88	0.809	Ø 51
SHB-A50	50	110	1.03	Ø 51
SHB-A63	63	138.6	1.30	Ø 51
SHB-A80	80	176	1.63	Ø 51
SHB-A100	100	220	2.07	Ø 51

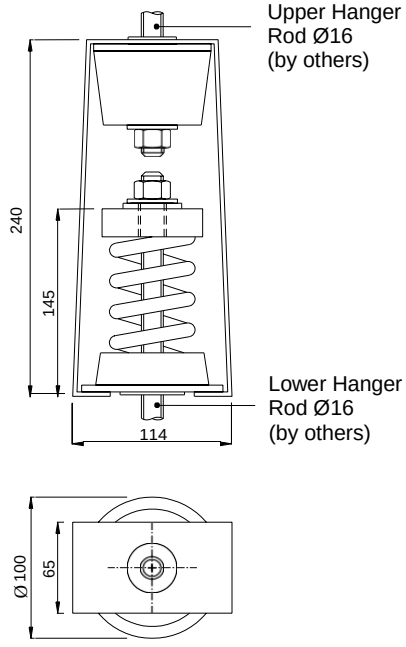

50mm Deflection Type

Model	Rated Load		Spring Rate (kg/mm)	Spring O.D.
	(kg)	(lbs)		
SHB-B32	32	70.4	0.658	Ø 60.3
SHB-B40	40	88	0.825	Ø 60.3
SHB-B50	50	110.0	1.07	Ø 60.3
SHB-B63	63	138.6	1.34	Ø 60.3
SHB-B80	80	176	1.64	Ø 60.3
SHB-B100	100	220.0	2.03	Ø 60.3
SHB-B125	125	275	2.74	Ø 60.3
SHB-B160	160	352	3.42	Ø 60.3
SHB-B200	200	440	4.27	Ø 60.3
SHB-B250	250	550	5.18	Ø 60.3
SHB-B315	315	693	6.28	Ø 60.3
SHB-B400	400	880	9.27	Ø 60.3
SHB-B500	500	1100	10.5	Ø 60.3
SHB-B630	630	1386	12.8	Ø 60.3

LEA069.E0 August 2018
Edition 5
Printed in August 2018

KRUGER VENTILATION INDUSTRIES ASIA CO LTD
- 30/159 Moo 1, Sinsakorn Industrial Estate, Chetsadawithi road,
Khok Kham, Mueng, Samutsakorn 74000, Thailand
- Tel +662 1054298 - Fax+662 0248256-9
- www.krugerfan.com

A member of Soler&Palau Ventilation Group