HASCON
ELECTRIC MOTOR

LOW VOLTAGE
HIGH EFFICIENCY MOTORS IE2 IE3



e-catalog

General specification

Standards and regulation 4
Conditions of installation 4
Insulation and temperature rise 5
Tolerances 5
Mechanical design 6
Mounting arrangements 7
Lubrication and maintenance of bearings 9
Lubricating nipples 9
Electrical design 10
Three-phase squirrel-cage motors driven by frequency inverters 12
Cast Iron Motors 13
Maximum Permissible axial loads without radial load 14
Anit-condensation heating 16

Technical data

IE3 General Performance 17
Dimensions foot mount B3 20
Dimensions foot flange mount B35 22
Dimensions foot flange mount B5 and V1 24
Mounting dimensions 35512 26
Top terminal box 27
Bearing & Lubrication 28
IE2 General Performance 29
Dimensions foot mount B3 32
Dimensions foot flange mount B35 34
Dimensions foot flange mount B5 and V1 36
Mounting dimensions 35512 38
Top terminal box 39
Bearing & Lubrication 40

Notes

Revisions

All technical data, outputs, dimensions and weights, stated in this catalogue, are subject to change without notice. Illustrations do not purport to show constructional details.

Standards and regulation

The motors comply with the relevant standards and regulations, especially:

Electrical

IEC - Standard	EN - Standard	Content
IEC 60034 - 1	EN 60034 - 1	Rating and performance
IEC 60034 - 8	EN 60034 - 8	Terminal markings and direction of rotation
IEC 60034 - 12	EN 60034 - 12	Starting performance
IEC 60034 - 30	EN 60034 - 30	Efficiency classes of single - speed, three-phase, cage - induction motors (IE-Code)
IEC 60038	EN 60038	Standard voltages

Mechanical

IEC - Standard	EN - Standard	Content
IEC 60072	EN 50347	Dimensions and outputs
IEC 60034 - 5	EN 60034 - 5	Degrees of protection
IEC 60034 - 6	EN 60034 - 6	Methods of cooling
IEC 60034 - 7	EN 60034 - 7	Type of construction
IEC 60034 - 9	EN 60034 - 9	Noise limits
IEC 60034 - 14	EN 60034 - 14	Vibrations

Conditions of installation

The motors are designed for operation at altitudes ≤1000 m above sea-level and at coolant temperature of up to 40° C.
Exceptions are indicated on the rating plate.
The motors comply with protection degree IP 55 according IEC 60034-5 (higher protection degrees on request).
Motors with standard design for horizontal mounting arrangements are suitable for indoor and protected outdoor installation, climate group Moderate (temperature of coolant -20° C to +40° C).
In case of unprotected outdoor installation or aggravating climatic conditions (moisture category wet, climate group Worldwide, extremely dusty site conditions, aggressive industrial atmosphere, danger of storm rain and coastal climate, danger of attack by termites, etc.), as well as vertical mounting, special measures are required, such as:

- Protective cowl (for vertical mounting with shaft – down)
- For vertical mounting with shaft – up flange drainage and additional bearing seal, if necessary
- Special painting
- Treatment of winding with moisture protection varnish
- Anti-codensation heating (anti-condensation heating of winding, if necessary)
- Condensation drain holes

The special measures to be applied have to be agreed with us once the conditions of installation have been clarified.

Insulation and temperature rise

The insulation of the motors complies with temperature class F according EN 60034-1. The table beside defines the temperature rise (ΔT^*) and maximum temperatures at the hottest points of the winding (T_{max}) according to the temperature classes of the EN 60034-1 standard.

Class	ΔT^*	T_{max}
B	80 K	125 °C
F	105 K	155 °C
H	125 K	180 °C

Tolerances

For industrial motors according to EN 60034-1, certain tolerances must be allowed on guaranteed values, taking into consideration the tolerances for the manufacture of such motors and the variances of the used materials. The standard specification sheet includes the following remarks:

- Guarantee of all or any of the values according to the table is not obligatory. Guaranteed values that are subject to tolerance have to be mentioned in offers explicit. The allowed tolerances must be in accordance with the table.
- Where a tolerance is stated in only one direction, the value is not limited in the other direction.

Values for	Tolerance
Efficiency (η) (in case of indirect determination)	-0,15 x (1- η) at $P_N \leq 50$ kW -0,1 x (1- η) at $P_N > 50$ kW
Power factor ($\cos\varphi$)	$-\frac{1-\cos\phi}{6}$, minimum 0.02, maximum 0.07
Slip (s) (at rated load and at working temperature)	±20 % of the guaranteed slip at $P_N \geq 1$ kW ±30 % of the guaranteed slip at $P_N < 1$ kW
Starting current (I_S) (in case of the intended starting circuit)	+20 % of the guaranteed starting current no lower limit
Starting torque (T_S)	-15 % and +25 % of the guaranteed starting torque (+25 % may be exceeded by agreement)
Pull-up torque (T_P)	-15 % of the guaranteed value
Breakdown torque (T_B)	-10 % of the guaranteed value (after allowing for this tolerance, TB /TN at least 1,6)
Moment of inertia (I)	±10 % of the guaranteed value

Mechanical tolerances

Accordind to IEC 72-1,the tolerances on mechanical dimensions of electric motors given besige are permitted.

Note: The holes at the shaft end correspond with DIN 332

Parameter	Code	Area	Tolerance
Frame size	H	up to 250 > 250	0.5 mm 1 mm
Diameter of shaft end	D-DA	from 11 to 28 mm from 38 to 48 mm from 55 to 100 mm	j6 k6 m6
Hub key width	F-FA		h9
Flange centring	N	up to 132 > 132	j6 h8

Mechanical design

Protection degrees

Protection degress for electrical machines and designated in accordance with IEC 60034-5 by the letters IP and two characteristic numerals.

First numeral:
Protection against contact and ingress of foreign bodies

IP	Description
0	No special protection
1	Protection against solid foreign bodies larger than 50mm (Example: inadvertent contact with the hand)
2	Protection against solid foreign bodies larger than 12 mm (Example: inadvertent contact with the fingers)
3	Protection against solid foreign bodies larger than 2.5 mm (Example: Wires, tools)
4	Protection against solid foreign bodies larger than 1mm (Example: Wires, bands)
5	Protection against dust (harmful deposits of dust)
6	Total protection against dust (is not described for electrical machines according IEC 34-5)

Second numeral:
Protection against ingress of water

IP	Description
0	No special protection
1	Protection against vertically falling water drops (condensation)
2	Protection against dropping water when inclined by up to 15°
3	Protection against spray water up to 60° from vertical
4	Protection against shower water from any direction
5	Protection against water projected by a nozzle and from any direction
6	Protection against heavy seas or water projected in powerful jets
7	Protection when submerged between 0,15 and 1 m
8	Protection when continuosly submerged in water at conditions agreed between the manufacturer and the user

Mounting arrangements

Mounting arrangements for rotating electrical machines are designated according to IEC 60034-7, Code I (in bracketsCode II). Our motors are available according to the table depending on design and frame size.

Foot mounting	Flange mounting	Motors without end sheild
IM B3 (IM 1001) 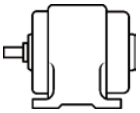	IM B5 (IM 3001) 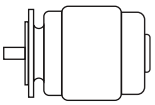 Mounting flange type A according DIN 42 948 at drive end	IM B9 (IM 9101) 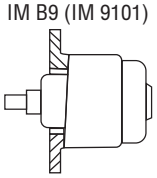 Without end shield and without roller bearing on drive end
IM B6 (IM 1051) * 	IM V1 (IM 3011) 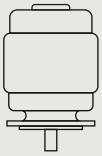 Mounting flange type A according DIN 42 948 at drive end	IM V8 (IM 9111) 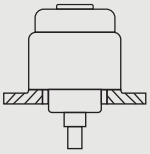 Without end shield and without roller bearing on drive end
IM B7 (IM 1061) * 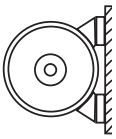	IM V3 (IM 3031)  Mounting flange type A according DIN 42 948 at drive end	IM V9 (IM 9131) 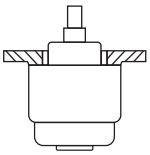 Without end shield and without roller bearing on drive end
IM B8 (IM 1071) * 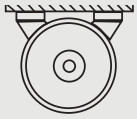	IM B35 (IM 2001) 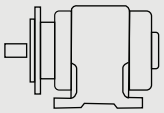 Mounting flange type A according DIN 42 948 at drive end	IM B15 (IM 1201) 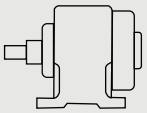 Without end shield and without roller bearing on drive end
IM V5 (IM 1011) * 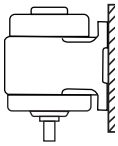	IM B14 (IM 3601) 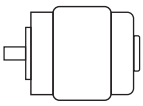 Mounting flange type C according DIN 42 948 at drive end	
IM V6 (IM 1031) * 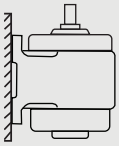	IM V18 (IM 3611) 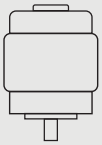 Mounting flange type C according DIN 42 948 at drive end	
IM B34 (IM 2101) 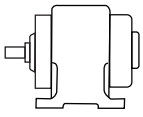 Mounting flange type C according DIN 42 948 at drive end	IM V19 (IM 3631) 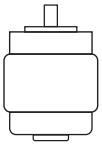 Mounting flange type C according DIN 42 948 at drive end	

* From frame size 225 on request

Terminal boxes

The location of the terminal box in standard design is on top (view to drive end); on the right or on the left is also possible.
For motors with mounting arrangements IM B6, IM B7, IM B8, IM V5, IM V6 the location of the terminal box is related to an IM B3 mounting.
The position of the entry openings can be adapted to the existing connection possibilities for most motors by turning the terminal box by 90°. Please enquire if special accessories should be used (temperature sensors, anti-condensation heating, etc.).
For motors in standard design, the screwed stuffing boxes do not belong to our scope of delivery.

Belt drive

The data refer only to the normal shaft end at the drive end of IM B3 motors with one speed.

Calculation of radial shaft load:

$$F_R = \frac{19120 \cdot P \cdot k}{D_1 \cdot n} [N]$$

F_R = radial shaft load in N
P = power in kW
n = speed in min^{-1}
D_1 = pulley diameter in m
k = belt tension factor

The belt tension factor depends on the type of belt and is assumed to be approximately:

3…4	for normal flat belt without idle pulley
2…2,5	for normal flat belt with idle pulley
2,2…2,5	for V-belt

Please enquire exact data from the belt manufacturer.

Vibration behaviour

The vibration severity of electric motors is determined in EN 60034-14 Mechanical vibration of certain machines with shaft heights 56 and higher – Measurement, evaluation and limits of vibration severity.
The rotors of the motors are dynamically balanced with half key fitted according to DIN ISO 8821. Other balancing is available by agreement only.
Our standard motors observe or fall below vibration category A. Motors with ball bearing can be supplied in vibration category B at extra cost.

Maximum operating speed

Motors in basic design are mechanically suitable for the maximum operating speeds given beside.

Rame size	2 - pole	4…8 - pole
63…112	5200	3600
132…180	4600	3000
200	4500	3000
225	4500	3000
250	3900	3000
280	3600	3000
315 S/M	3600	2600
315 L	3600	2600
355 S	3600	2600
355 M	3600	2600
355 L	3600	2600

Lubrication and maintenance of bearings

The bearings of standard motors up to frame size 132 (EH1) have permanent lubrication. Bearing grease K3N according DIN 51 825 is used (e.g. KLÜER ASONIC GHY72, ESSO UNIREX N3 or similar).

Maintenance-free operating time of motors with permanent lubrication at ambient temperature of 40°C and 50 Hz mains operation:

- 2- and 4/2-pole motors 10,000 h
- 4 and more pole motors 20,000 h, but 4 years at most

From frame size 160 the motors are equipped with lubricator and grease.
First lubrication is made with grease K3N according DIN 51 825 (lithium-based, behaviour in the presence of water accoring DIN 51 807 part 1: level 0 or 1).
For motors with lubricator, the regreasing interval and required quantity of grease is indicated on the rating plate.
For regreasing please observe the operating instructions.
In case of unfavourable conditions (e.g. high ambient temperature, dusty conditions, corrosive atmosphere, operation by frequency inverter), regreasing should be carried out more frequently.

Lubricating nipples

Flat type lubricating nipple M10x1 according DIN 3404.

Electrical design

Rated voltage

For the rated voltage of the motors a voltage tolerance of ±10 % applies. According to IEC 60038 the mains voltages may have a tolerance of ±10 %.
When the motors are operated at the limits of the voltage tolerance, the permissible overtemperature of the stator winding may be exceeded by 10 K.

Rated frequency

Motors with windings for 50 Hz can be also operated on 60 Hz mains, when the mains voltage increases proportionally to the frequency.The relative values for starting and breakaway torque remain nearly unchanged and slightly increase for the starting current.The rated speed increases by the factor 1,2 and the rated power by factor 1,15. Should a motor designed for 50 Hz be operated at 60 Hz without the voltage being increased, the rated power of the motor cannot be increased. Under these operating conditions, the rated speed increases by factor 1,2. The relative values for starting and breakaway torque are reduced by factor 0,82 and the starting current by factor 0,9.

Rated current

The rated currents listed in the selection tables apply to an operating voltage of 400 V. The conversion to other operating voltages, with power and frequency remaining unchanged, is to be made as follows:

Rated voltage (V)	230	380	400	440	500	660	690
Conversion factor X I_N	1,74	1,05	1,0	0,91	0,80	0,61	0,58

Rated torque

$$\text{Rated torque in Nm} = 9550 \cdot \frac{\text{Shaft power in kW}}{\text{Rated speed in rpm}}$$

Power

The power stated in the table applies for constant load at continuous operation according duty class S1 of EN 60034-1, based on a coolant temperature of 40°C and installation at altitudes up to 1000 m above sea level.

For severe operating conditions, e.g. high switching rate, long run-up time or electric braking, a thermal reserve is necessary, which may require a higher temperature class or the use of a motor with higher rating. In these cases we recommend further enquiring and specification of the operating conditions.

Overload capability

At operating temperature three-phase motors are capable of withstanding an overload for 2 minutes (≤frame size 112: 15 seconds) with 1,5 times of the rated current at rated voltage. This overload capability complies with EN 60034-1 and will not result in excessive temperature rise.

When temperature class F is utilized, motors can be operated continuously with an overload of 12 %. This does not apply to motors which are already utilized according to thermal class F in their standard design.

Connection diagrams

Star connection

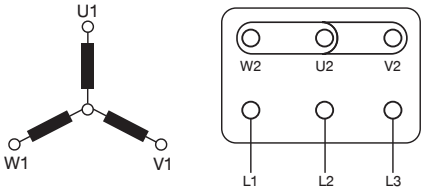

Star connection is obtained by connecting terminals W2, U2, V2 to each other and terminals U1, V1, W1 to the mains.

Phase current and phase voltage are: $I_{ph} = I_N$; $V_{ph} = V_N / \sqrt{3}$

I_N is the rated current and V_N the rated voltage at star connection.

Delta connection

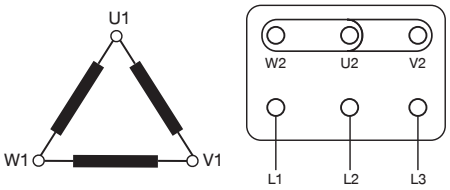

Delta connection is obtained by connecting the end of a phase to the beginning of the next phase.

Phase current and phase voltage are: $I_{ph} = I_N / 3$; $V_{ph} = V_n$

I_N and V_N are rated current and rated voltage at delta connection.

Star-delta connection

Star-delta connection permits a reduction of the starting current, ensuring however that the resulting starting torque obtained is higher than the load torque. Thereby it should be oberved that the torque of an asynchronous motor is directly proportional to the square of the voltage. Motors whose rated voltage with delta connection corresponds to the mains voltage, can be started with the star-delta method.

All motors can be supplied with windings designed for star-delta starting (for example: 400 V△ / 690 V Y).

Three-phase squirrel-cage motors driven by frequency inverters

The motors in standard design are suitable for operation on static frequency inverters, taking into account the following remarks:

- Maximum inverter output voltage 500 V at peak voltages $\hat{U} \leq 1460$ V and dv/dt ≤ 13 kV/ms. For higher inverter output voltages or higher stress a special insulation is required.
- At square characteristic of the load torque, motors can be operated with their rated torque (exceptions are marked in the selection tables).
- In case of constant torque, the rated torque must be reduced for self-ventilated motors due to reduced supply of cooling air. Depending on the speed range, the use of an external fan is recommendable.
- For motors from frame size 280 we recommend an insulated bearing at the non-drive end.

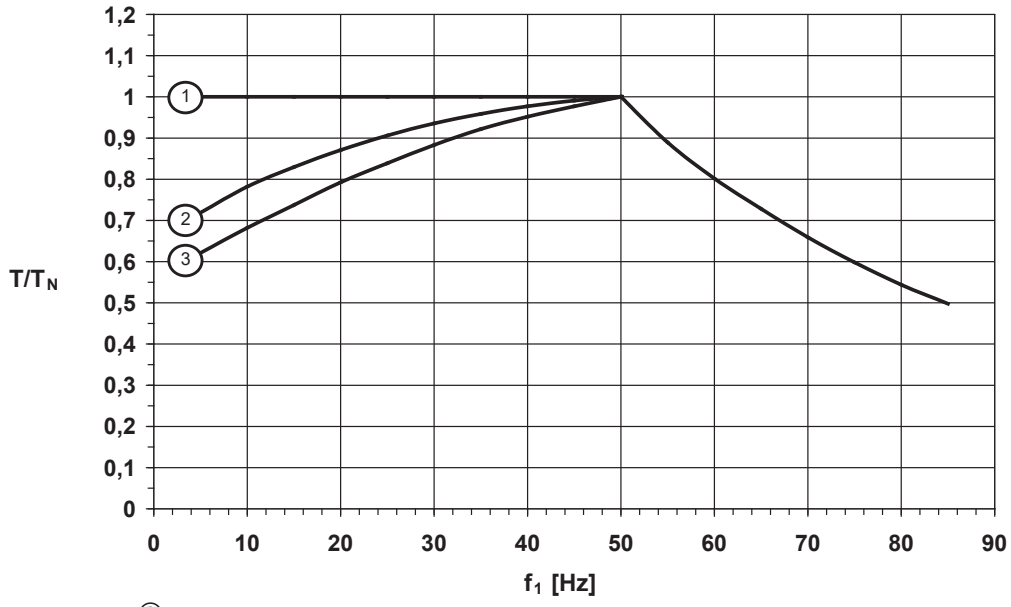

① Forced ventilation

② Self-ventilation, motors 2P

③ Self-ventilation, motors 4-8P

Voltage capability

The insulating system of the motors is suitable for inverter output voltages ≤ 500 V. Higher voltages are availble on request.

Noises

Depending on the operating point, the type of inverter and the set pulse frequency, inverter-fed motors produce between 1 and 15dB(A) higher noise values than at mains operation.

Motors that are operated with a frequency over 50 Hz have more air noise. In this case we recommend the use of an externalfan

Vibration severity

When operating at high speeds (according to frequency > 60 Hz) a reduced vibration severity “B” according to EN 60034 part 14 may be required, measured at a mains frequency of 50 Hz or 60 Hz and sinusoidal mains voltage.

Cast Iron Motors

Range of motors in cast iron frame, standard-like with lubricator, PTC thermistor temperature sensor in the stator winding, additional external protective conductor connection, available on short term in 2, 4, 6 and 8-pole design up to frame size 355.

Overview cast iron motors

Frame size	Rated power [kw]			
	2-pole	4-pole	6-pole	8-pole
63	0,18	0,12	—	—
63	0,25	0,18	—	—
71	0,37	0,25	0,18	—
71	0,55	0,37	0,25	—
80	0,75	0,55	0,37	0,18
80	1,1	0,75	0,55	0,25
90S	1,5	1,1	0,75	0,37
90L	2,2	1,5	1,1	0,55
100L	3,0	2,2	1,5	0,75
100L	—	3,0	—	1,1
112M	4,0	4,0	2,2	1,5
132S	5,5	—	—	—
132S	7,5	5,5	3,0	2,2
132M	—	—	4,0	—
132M	—	7,5	5,5	3,0
160M	11	—	—	4,0
160M	15	11	7,5	5,5
160L	18,5	15	11	7,5
180M	22	18,5	—	—
180L	—	22	15	11
200L	30	—	18,5	—
200L	37	30	22	15
225S	—	37	—	18,5
225M	45	45	30	22
250M	55	55	37	30
280S	75	75	45	37
280M	90	90	55	45
315S	110	110	75	55
315M	132	132	90	75
315L	160	160	110	90
315L	200	200	132	110
355M	250	250	160	132
355M	—	—	200	160
355L	315	315	250	200

Gerneral data

- Voltage/Connection — up to 3.0 kW: 220 V Δ / 380 V Y
from 4.0 kW: 380 V Δ / 660 V Y
- Mounting arrangements — IM 1001 (B3), IM 3001 (B5), IM 3601 (B14) feet can be mounted on flange-mounted motors
- Thermistor — 3 PTC built-in standard from frame 160 and above

Maximum permissible axial loads without radial load

Values are valid for 50 Hz. For 60 Hz. Operation the values have to be reduced by 10%. (If additional radial forces affect, enquiry is necessary depending on the direction of force)

Horizontal shaft

Frame size	Axial load thrust [kN]				Axial load tension [kN]			
	3000 min^{-1}	1500 min^{-1}	1000 min^{-1}	750 min^{-1}	3000 min^{-1}	1500 min^{-1}	1000 min^{-1}	750 min^{-1}
63	0,25	0,28	-	-	0,25	0,28	-	-
71	0,27	0,35	0,44	-	0,27	0,35	0,44	-
80	0,38	0,47	0,59	0,62	0,38	0,47	0,59	0,62
90	0,44	0,55	0,62	0,64	0,44	0,55	0,62	0,64
100	0,61	0,75	0,88	0,89	0,61	0,75	0,88	0,89
112	1,22	1,44	1,65	1,78	1,22	1,44	1,65	1,78
132	1,50	1,78	1,82	1,92	1,50	1,78	1,82	1,92
160	1,65	2,10	2,45	2,65	1,65	2,10	2,45	2,65
180	2,10	2,60	2,90	3,17	2,10	2,60	2,90	3,17
200	2,40	3,12	3,48	3,95	2,40	3,12	3,48	3,95
225	2,72	3,48	3,89	4,33	2,72	3,48	3,89	4,33
250	3,10	3,90	4,45	4,98	3,10	3,90	4,45	4,98
280	5,30	6,30	6,70	7,10	3,10	4,40	4,30	5,02
315	5,90	7,10	7,60	8,10	3,80	5,10	5,80	3,60
355	6,10	9,80	10,50	12,50	1,85	3,90	4,70	6,00

Vertical shaft downwards

Frame size	Axial load upwars [kN]				Axial load downwards [kN]			
	3000 min^{-1}	1500 min^{-1}	1000 min^{-1}	750 min^{-1}	3000 min^{-1}	1500 min^{-1}	1000 min^{-1}	750 min^{-1}
63	0,26	0,30	-	-	0,23	0,26	-	-
71	0,29	0,37	0,46	-	0,25	0,32	0,42	-
80	0,40	0,49	0,62	0,65	0,36	0,45	0,56	0,59
90	0,47	0,60	0,68	0,70	0,41	0,51	0,46	0,58
100	0,67	0,84	0,97	0,97	0,57	0,71	0,82	0,84
112	1,30	1,52	1,74	1,88	1,17	1,37	1,58	1,71
132	1,62	1,97	2,00	2,10	1,43	1,61	1,66	1,76
160	1,95	2,47	2,80	3,05	1,35	1,72	2,05	2,21
180	2,45	3,20	3,51	3,78	1,72	2,00	2,28	2,55
200	2,94	3,85	4,35	4,81	1,84	2,39	2,61	3,09
225	3,42	4,37	5,04	5,33	2,02	2,59	2,82	3,33
250	3,94	5,00	5,57	6,38	2,26	2,80	3,32	3,58
280	6,50	7,80	7,90	9,10	2,10	3,00	2,90	3,52
315	8,00	10,70	11,80	12,50	2,00	3,15	3,50	4,40
355	14,00	18,30	20,70	21,50	0,80	2,50	3,50	3,60

Permissible radial loads

without additional axial load (ball bearing)

max. permissible radial loads in the table are valid for

X = 1/2 shaft length

Frame size	F_R in N for number of poles			
	2	4	6	8
63	300	300	-	-
71	400	400	400	-
80	610	650	750	820
90S/L	660	710	810	890
100L	920	990	1130	1240
112M	1330	1430	1640	1800

F_R = Pemissible radial load in kN (without additional axial load)

X = Distance between working point of force and shaft shoulder (e.g. half pulley width)

For calculation of the radial forces see Belt drive on page 8.

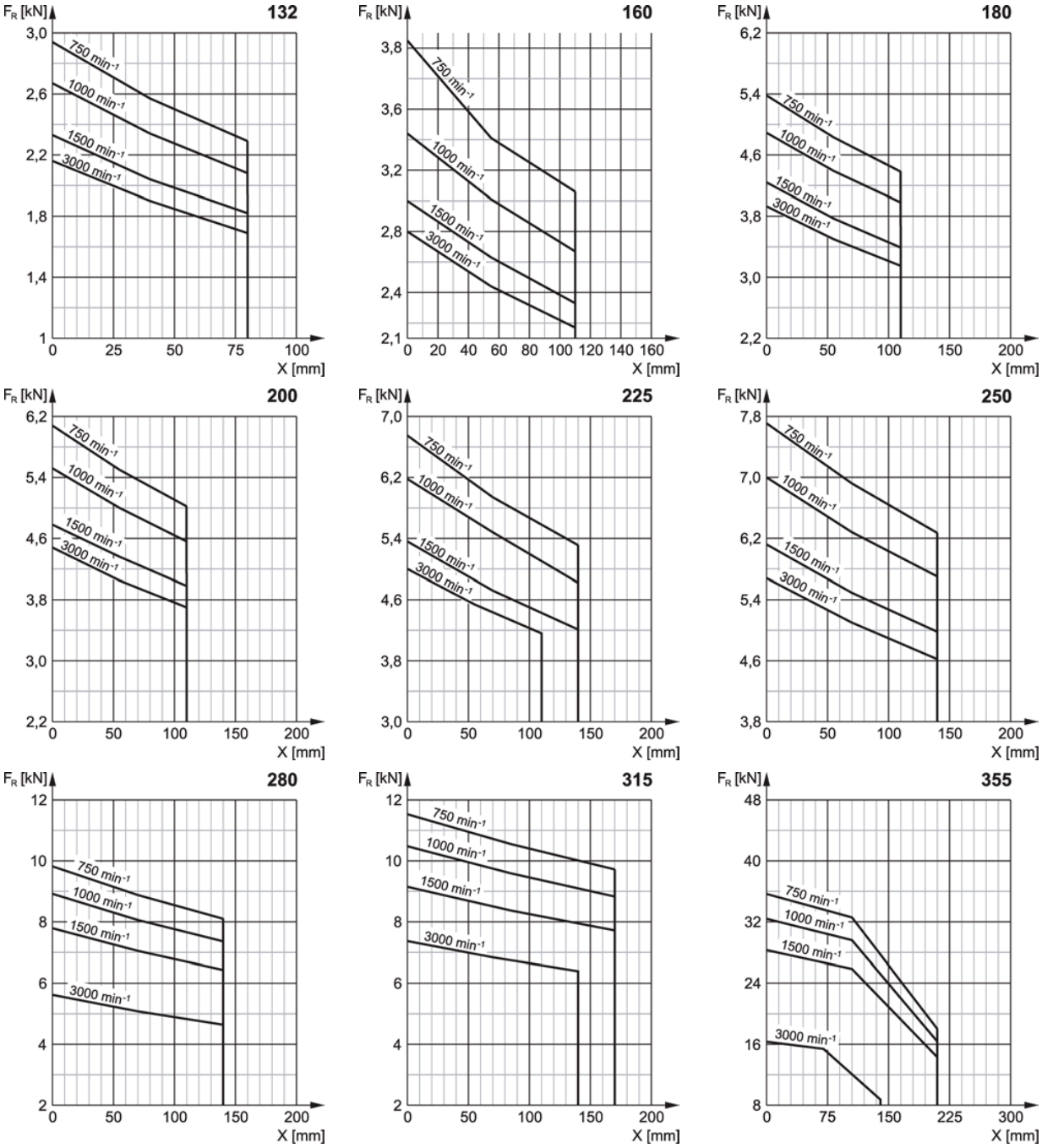

Anti – condensation heating

Motors which are exposed to a risk of humidity during standstill due to severe temperature variations can be equipped with anti-condensation heating (space heaters) for an extra charge, if requested.

The supply voltage and the heating power of the strip heaters can be taken from the table beside.

Frame size	Supply voltage [V]	Heating elements [W]
132…200	220	2 × 40
225…250	220	2 × 50
280…315	220	2 × 65
355	220	2 × 100

IE3 General Performance

2 pole–3000 rpm synchronous speed 50Hz

Motors type	Rated output KW	Rated speed rpm	1FL 380V A	1FL 400V A	1FL 415V A	1FL 525V A	EFF %	Power factor cos ϕ	Rated torque N.m	TST/TFL	TM/TFL	IST/IFL	M of 1 kgm^2	Noise level LW dB(A)	Net weight kg
HE3-801-2	0.75	2855	1.7	1.6	1.6	1.2	80.7	0.82	2.5	2.3	2.3	7.0	0.001	62	19
HE3-802-2	1.1	2855	2.4	2.3	2.2	1.8	82.7	0.83	3.7	2.2	2.3	7.3	0.002	62	22
HE3-90S-2	1.5	2875	3.2	3.1	3.0	2.3	84.2	0.84	5.0	2.2	2.3	7.6	0.002	67	30
HE3-90L-2	2.2	2875	4.6	4.3	4.2	3.3	85.9	0.85	7.3	2.2	2.3	7.6	0.003	67	36
HE3-100L-2	3	2880	6.0	5.7	5.5	4.4	87.1	0.87	9.9	2.2	2.3	7.8	0.006	74	45
HE3-112M-2	4	2900	7.8	7.4	7.2	5.7	88.1	0.88	13.2	2.2	2.3	8.3	0.009	77	58
HE3-132S1-2	5.5	2900	10.6	10.1	9.7	7.7	89.2	0.88	18.1	2.0	2.3	8.3	0.024	79	75
HE3-132S2-2	7.5	2900	14.4	13.7	13.2	10.4	90.1	0.88	24.7	2.0	2.3	7.9	0.029	79	84
HE3-160M1-2	11	2940	20.6	19.6	18.9	14.9	91.2	0.89	35.7	2.0	2.3	8.1	0.067	81	147
HE3-160M2-2	15	2940	27.9	26.5	25.5	20.2	91.9	0.89	48.7	2.0	2.3	8.1	0.080	81	166
HE3-160L-2	18.5	2940	34.2	32.5	31.3	24.7	92.4	0.89	60.1	2.0	2.3	8.2	0.097	81	183
HE3-180M-2	22	2955	40.5	38.5	37.1	29.3	92.7	0.89	71.1	2.0	2.3	8.2	0.137	83	235
HE3-200L1-2	30	2965	54.9	52.1	50.3	39.7	93.3	0.89	96.6	2.0	2.3	7.6	0.227	84	298
HE3-200L2-2	37	2965	67.4	64.0	61.7	48.8	93.7	0.89	119.2	2.0	2.3	7.6	0.269	84	325
HE3-225M-2	45	2970	80.8	76.8	74.0	58.5	94.0	0.90	144.7	2.0	2.3	7.7	0.360	86	379
HE3-250M-2	55	2975	98.5	93.5	90.2	71.3	94.3	0.90	176.6	2.0	2.3	7.7	0.791	89	483
HE3-280S-2	75	2975	133.7	127.0	122.4	96.8	94.7	0.90	240.8	1.8	2.3	7.1	0.960	91	629
HE3-280M-2	90	2975	159.9	151.9	146.4	115.8	95.0	0.90	288.9	1.8	2.3	7.1	1.157	91	705
HE3-315S-2	110	2980	195.1	185.3	178.6	141.2	95.2	0.90	352.5	1.8	2.3	7.1	1.662	92	1040
HE3-315M-2	132	2980	233.6	221.9	213.9	169.1	95.4	0.90	423.0	1.8	2.3	7.1	1.874	92	1140
HE3-315L1-2	160	2980	279.4	265.5	255.9	202.3	95.6	0.91	512.8	1.8	2.3	7.2	2.146	92	1293
HE3-315L-2	185	2980	322.8	306.6	295.5	233.6	95.7	0.91	592.9	1.8	2.2	7.2	2.481	92	1326
HE3-315L2-2	200	2980	348.6	331.1	319.2	252.3	95.8	0.91	640.9	1.8	2.2	7.2	2.448	92	1358
HE3-355M1-2	220	2980	387.6	368.3	354.9	280.6	95.8	0.90	705.0	1.6	2.2	7.2	2.693	100	1694
HE3-355M2-2	250	2980	440.5	418.5	403.4	318.8	95.8	0.90	801.2	1.6	2.2	7.2	4.034	100	1802
HE3-355L1-2	280	2980	493.4	468.7	451.8	357.0	95.8	0.90	897.3	1.6	2.2	7.2	4.518	100	1920
HE3-355L2-2	315	2980	555.0	527.3	508.2	401.7	95.8	0.90	1009.5	1.6	2.2	7.2	4.645	100	2017
HE3-3551-2	355	2980	625.5	594.3	572.8	452.8	95.8	0.90	1137.6	1.6	2.2	7.2	5.242	104	2130
HE3-3552-2	375	2980	660.8	627.8	605.0	478.3	95.8	0.90	1201.7	1.6	2.2	7.2	5.536	104	2398

IE3 General Performance

4 pole-1500 rpm synchronous speed 50Hz

Motors type	Rated output KW	Rated speed rpm	1FL 380V A	1FL 400V A	1FL 415V A	1FL 525V A	EFF %	Power factor cos ϕ	Rated torque N.m	TST/TFL	TM/TFL	IST/IFL	M of 1 kgm^2	Noise level LW dB(A)	Net weight kg
HE3-802-4	0.75	1400	1.8	1.7	1.7	1.3	82.5	0.75	5.1	2.3	2.3	6.6	0.003	56	24
HE3-90S-4	1.1	1425	2.6	2.5	2.4	1.9	84.1	0.76	7.4	2.3	2.3	6.8	0.004	59	32
HE3-90L-4	1.5	1425	3.5	3.3	3.2	2.5	85.3	0.77	10.1	2.3	2.3	7.0	0.005	59	39
HE3-100L1-4	2.2	1440	4.8	4.5	4.4	3.4	86.7	0.81	14.6	2.3	2.3	7.6	0.012	64	49
HE3-100L2-4	3	1440	6.3	6.0	5.8	4.6	87.7	0.82	19.9	2.3	2.3	7.6	0.016	64	56
HE3-112M-4	4	1450	8.4	7.9	7.7	6.1	88.6	0.82	26.3	2.2	2.3	7.8	0.022	65	73
HE3-132S-4	5.5	1455	11.2	10.7	10.3	8.1	89.6	0.83	36.1	2.0	2.3	7.9	0.060	71	88
HE3-132M-4	7.5	1455	15.0	14.3	13.7	10.9	90.4	0.84	49.2	2.0	2.3	7.5	0.071	71	108
HE3-160M-4	11	1465	21.5	20.4	19.7	15.6	91.4	0.85	71.7	2.2	2.3	7.7	0.137	73	150
HE3-160L-4	15	1465	28.8	27.3	26.3	20.8	92.1	0.86	97.8	2.2	2.3	7.8	0.171	73	180
HE3-180M-4	18.5	1470	35.3	33.5	32.3	25.5	92.6	0.86	120.2	2.0	2.3	7.8	0.238	76	221
HE3-180L-4	22	1475	41.8	39.7	38.3	30.3	93.0	0.86	142.4	2.0	2.3	7.8	0.259	76	255
HE3-200L-4	30	1475	56.6	53.8	51.9	41.0	93.6	0.86	194.2	2.0	2.3	7.3	0.459	76	325
HE3-225S-4	37	1480	69.6	66.1	63.7	50.4	93.9	0.86	238.8	2.0	2.3	7.4	0.656	78	380
HE3-225M-4	45	1480	84.4	80.2	77.3	61.1	94.2	0.86	290.4	2.0	2.3	7.4	0.758	78	419
HE3-250M-4	55	1480	102.7	97.6	94.1	74.3	94.6	0.86	354.9	2.2	2.3	7.4	1.078	79	517
HE3-280S-4	75	1485	136.3	129.5	124.8	98.7	95.0	0.88	482.3	2.0	2.3	6.9	1.800	80	688
HE3-280M-4	90	1485	163.2	155.1	149.5	118.1	95.2	0.88	578.8	2.0	2.3	6.9	2.130	80	801
HE3-315S-4	110	1485	196.8	187.0	180.2	142.5	95.4	0.89	707.4	2.0	2.2	7.0	3.415	88	1049
HE3-315M-4	132	1485	235.7	223.9	215.8	170.6	95.6	0.89	848.9	2.0	2.2	7.0	3.807	88	1160
HE3-315L1-4	160	1485	285.1	270.9	261.1	206.4	95.8	0.89	1029.0	2.0	2.2	7.1	3.423	88	1269
HE3-315L-4	185	1485	329.3	312.9	301.6	238.4	95.9	0.89	1189.7	2.0	2.2	7.1	3.958	88	1483
HE3-315L2-4	200	1485	351.7	334.1	322.0	254.6	96.0	0.90	1286.2	2.0	2.2	7.1	5.262	88	1521
HE3-355M1-4	220	1490	386.9	367.5	354.3	280.0	96.0	0.90	1410.1	2.0	2.2	7.1	5.449	88	1650
HE3-355M2-4	250	1490	444.5	422.3	407.0	321.7	96.0	0.89	1602.3	2.0	2.2	7.1	6.192	95	1815
HE3-355L1-4	280	1490	498.0	473.0	456.0	360.4	96.0	0.89	1794.6	2.0	2.2	7.1	6.935	95	1870
HE3-355L2-4	315	1490	560.0	532.0	513.0	405.4	96.0	0.89	2018.9	2.0	2.2	7.1	7.273	95	1984
HE3-3551-4	355	1490	638.5	606.5	584.6	462.1	96.0	0.88	2275.3	1.7	2.2	7.0	8.196	102	2291
HE3-3552-4	375	1490	674.4	640.7	617.6	488.2	96.0	0.88	2403.5	1.7	2.2	7.0	8.658	102	2376

IE3 General Performance

6 pole–1000 rpm synchronous speed 50Hz

Motors type	Rated output KW	Rated speed rpm	1FL 380V A	1FL 400V A	1FL 415V A	1FL 525V A	EFF %	Power factor cos ϕ	Rated torque N.m	TST/TFL	TM/TFL	IST/IFL	M of 1 kgm^2	Noise level LW dB(A)	Net weight kg
HE3-90S-6	0.75	935	2.0	1.9	1.9	1.5	78.9	0.71	7.7	2.0	2.1	6.0	0.004	57	32
HE3-90L-6	1.1	940	2.8	2.7	2.6	2.0	81.0	0.73	11.2	2.0	2.1	6.0	0.006	57	40
HE3-100L-6	1.5	945	3.8	3.6	3.5	2.7	82.5	0.73	15.2	2.0	2.1	6.5	0.016	61	47
HE3-112M-6	2.2	950	5.4	5.1	4.9	3.9	84.3	0.74	22.1	2.0	2.1	6.6	0.039	65	63
HE3-132S-6	3	960	7.2	6.8	6.6	5.2	85.6	0.74	29.8	2.0	2.1	6.8	0.035	69	75
HE3-132M1-6	4	960	9.5	9.0	8.7	6.8	86.8	0.74	39.8	2.0	2.1	6.8	0.043	69	92
HE3-132M2-6	5.5	960	12.7	12.0	11.6	9.2	88.0	0.75	54.7	2.0	2.1	7.0	0.056	69	108
HE3-160M-6	7.5	970	16.2	15.4	14.8	11.7	89.1	0.79	73.8	2.0	2.1	7.0	0.140	73	144
HE3-160L-6	11	970	23.1	22.0	21.2	16.7	90.3	0.80	108.3	2.0	2.1	7.2	0.192	73	178
HE3-180L-6	15	975	30.9	29.3	28.2	22.3	91.2	0.81	146.9	2.0	2.1	7.3	0.319	73	227
HE3-200L1-6	18.5	975	37.8	36.0	34.7	27.4	91.7	0.81	181.2	2.0	2.1	7.3	0.446	73	294
HE3-200L2-6	22	975	44.8	42.5	41.0	32.4	92.2	0.85	215.5	2.0	2.1	7.4	0.557	73	316
HE3-225M-6	30	985	59.1	56.2	54.1	42.8	92.9	0.85	290.9	2.0	2.1	6.9	0.832	74	357
HE3-250M-6	37	985	71.7	68.1	65.7	51.9	93.3	0.85	358.7	2.0	2.1	7.1	1.447	76	496
HE3-280S-6	45	985	85.8	81.6	78.6	62.1	93.7	0.85	436.3	2.0	2.0	7.3	2.252	78	613
HE3-280M-6	55	985	103.3	98.1	94.6	74.7	94.1	0.86	533.2	2.0	2.0	7.3	2.726	78	693
HE3-315S-6	75	990	143.4	136.2	131.3	103.8	94.6	0.84	723.5	2.0	2.0	6.6	3.984	83	1049
HE3-315M-6	90	990	169.5	161.0	155.2	122.7	94.9	0.85	868.2	2.0	2.0	6.7	4.500	83	1215
HE3-315L1-6	110	990	206.8	196.4	189.3	149.7	95.1	0.85	1061.1	2.0	2.0	6.7	5.607	83	1302
HE3-315L2-6	132	990	244.5	232.2	223.8	176.9	95.4	0.86	1273.3	2.0	2.0	6.8	6.935	83	1455
HE3-355M1-6	160	990	295.7	280.9	270.7	214.0	95.6	0.86	1543.4	1.8	2.0	6.8	10.222	85	1709
HE3-355M-6	185	990	341.5	324.5	312.7	247.2	95.7	0.86	1784.6	1.8	2.0	6.8	10.630	85	1830
HE3-355M2-6	200	990	364.6	346.4	333.8	263.9	95.8	0.87	1929.3	1.8	2.0	6.8	11.031	85	1945
HE3-355L1-6	220	990	401.1	381.0	367.2	290.3	95.8	0.87	2122.2	1.8	2.0	6.8	11.072	85	2018
HE3-355L2-6	250	990	455.7	433.0	417.3	329.9	95.8	0.87	2411.6	1.8	2.0	6.8	11.897	85	2092
HE3-3551-6	280	990	510.4	484.9	467.4	369.5	95.8	0.87	2701.0	1.8	2.0	6.8	13.692	91	2100
HE3-3552-6	315	990	580.9	551.9	531.9	420.5	95.8	0.86	3038.6	1.8	2.0	6.8	14.990	91	2299

Dimensions foot mount B3

HE3–80 ~ 132

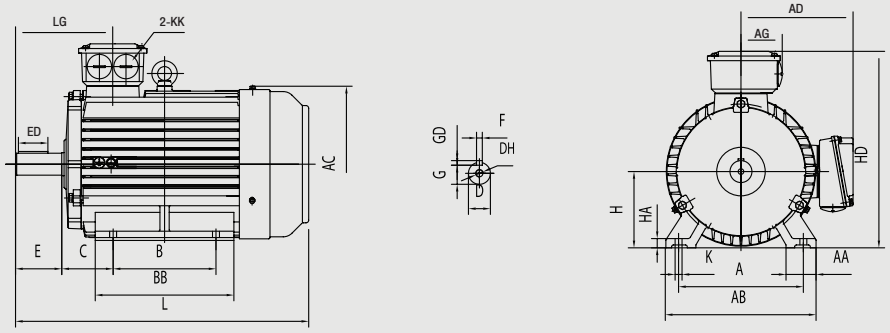

HE3–160 ~ 200

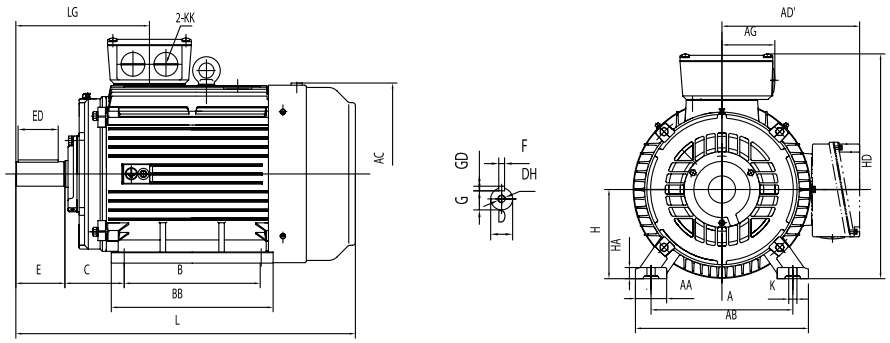

HE3–225–280

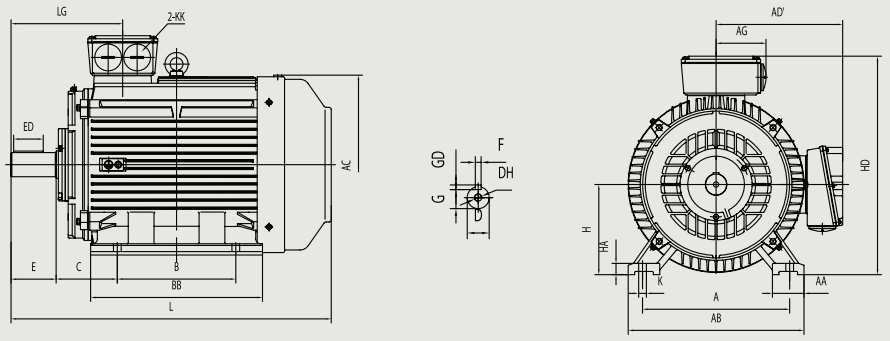

HE3–315 ~ 355

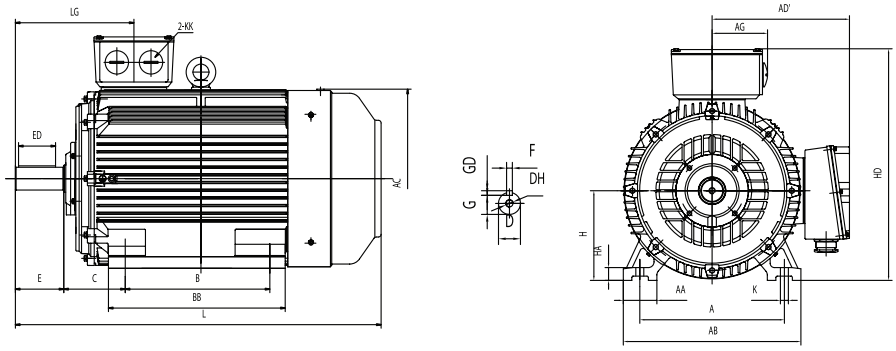

Dimensions foot mount B3

Frame	A	AA	AB	AC	AD'	B	BB	C	D	E	ED	F	G	GD	H	HA	HD	K	KK	L	LG
80	125	34	165	175	145	100	142	50	19	40	22	6	15.5	6	80	10	220	10	M24X1.5	305	112
90S	140	36	180	205	170	100	180	56	24	50	32	8	20	7	90	12.5	260	10	M24X1.5	360	126
90L	140	36	180	205	170	125	210	56	24	50	32	8	20	7	90	12.5	260	10	M24X1.5	390	126
100L	160	40	205	215	180	140	233	63	28	60	40	8	24	7	100	14	270	12	M24X1.5	435	153
112M	190	45	230	255	200	140	252	70	28	60	40	8	24	7	112	14	310	12	M30X2	440	144
132S	216	52	270	310	230	140	220	89	38	80	56	10	33	8	132	16	365	12	M30X2	510	167
132M	216	52	270	310	230	178	258	89	38	80	56	10	33	8	132	16	365	12	M30X2	550	167
160M	254	65	320	340	260	210	305	108	42	110	80	12	37	8	160	19	425	14.5	M36X2	730	270
160L	254	65	320	340	260	254	325	108	42	110	80	12	37	8	160	19	425	14.5	M36X2	760	270
180M	279	74	335	390	285	241	330	121	48	110	80	14	42.5	9	180	22	460	14.5	M36X2	770	277
180L	279	74	335	390	285	279	370	121	48	110	80	14	42.5	9	180	22	460	14.5	M36X2	800	277
200L	318	85	395	445	320	305	370	133	55	110	90	16	49	10	200	25	520	18.5	M48X2	860	298
225S(4-6P)	356	80	435	495	350	286	355	149	60	140	100	18	53	11	225	28	560	18.5	M48X2	830	340
225M(2P)	356	80	435	495	350	311	380	149	55	110	80	16	49	10	225	28	560	18.5	M48X2	830	310
225M(4-6P)	356	80	435	465	350	311	380	149	60	140	100	18	53	11	225	28	560	18.5	M48X2	860	340
250M(2P)	406	88	495	520	390	349	440	168	60	140	100	18	53	11	250	33	635	24	M64X2	990	360
250M(4-6P)	406	88	495	550	390	349	440	168	65	140	100	18	58	11	250	33	635	24	M64X2	990	360
280S(2P)	457	90	550	630	435	368	495	190	65	140	100	18	58	11	280	35	705	24	M64X2	990	350
280S(4-6P)	457	90	550	630	435	368	495	190	75	140	100	20	67.5	12	280	35	705	24	M64X2	990	350
280M(2P)	457	90	550	630	435	419	535	190	65	140	100	18	58	11	280	35	705	24	M64X2	1040	350
280M(4-6P)	457	90	550	630	435	419	535	190	75	140	100	20	67.5	12	280	35	705	24	M64X2	1040	350
315S(2P)	508	120	635	645	530	406	565	216	65	140	100	18	58	11	315	45	845	28	M64X2	1180	387
315M(2P)	508	120	635	645	530	457	675	216	65	140	100	18	58	11	315	45	845	28	M64X2	1210	387
315L(2P)	508	120	635	645	530	508	675	216	65	140	100	18	58	11	315	45	845	28	M64X2	1210	387
315S(4-6P)	508	120	635	645	530	406	515	216	80	170	130	22	71	14	315	45	845	28	M64X2	1290	417
315M(4-6P)	508	120	635	650	530	457	625	216	80	170	130	22	71	14	315	45	845	28	M64X2	1320	417
315L(4-6P)	508	120	635	650	530	508	625	216	80	170	130	22	71	14	315	45	845	28	M64X2	1320	417
355M(2P)	610	125	735	735	655	560	775	254	75	140	110	20	67.5	12	355	49	1000	28	M72X2	1500	420
355L(2P)	610	125	735	735	655	630	775	254	75	140	110	20	67.5	12	355	49	1000	28	M72X2	1500	420
355M(4-6P)	610	125	735	735	655	560	775	254	95	170	140	25	86	14	355	49	1000	28	M72X2	1530	450
355L(4-6P)	610	125	735	735	655	630	875	254	95	170	140	25	86	14	355	49	1000	28	M72X2	1630	450

Dimensions foot–flange mount B35

HE3–80 ~ 132

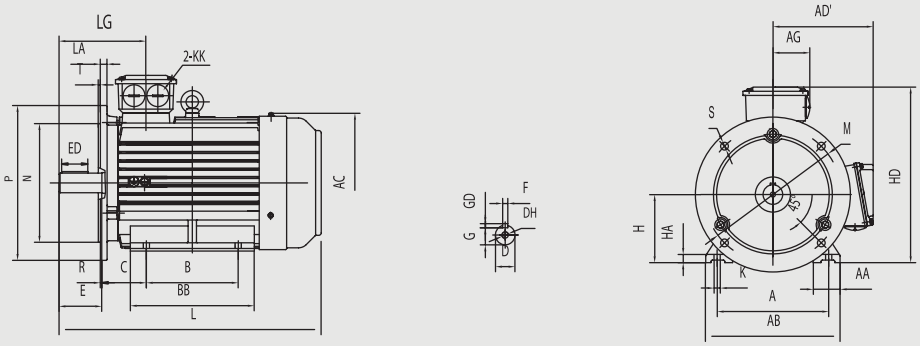

HE3–160 ~ 200

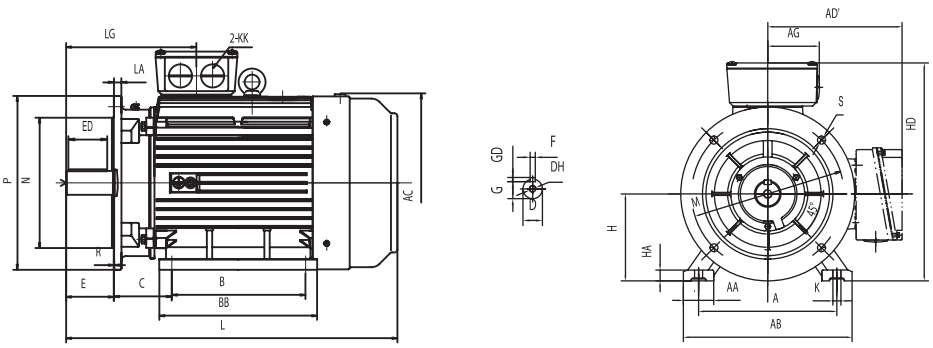

HE3–225 ~ 280

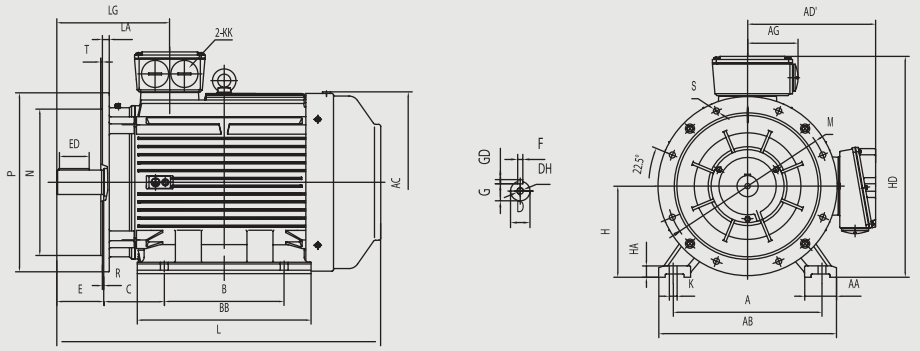

HE3–315 ~355

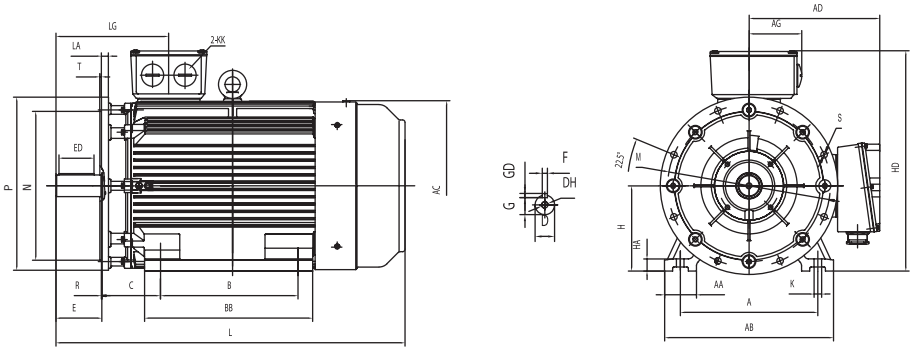

Dimensions foot–flange mount B35

Frame	A	AA	AB	AC	AD'	B	BB	C	D	E	ED	F	G	GD	H	HA	HD	K	L	LA	LG	M	N	P	S	T	KK
80	125	34	165	175	145	100	130	50	19	40	22	6	15.5	6	80	10	220	10	305	14	112	165	130	200	12	3.5	M24X1.5
90S	140	36	180	205	170	100	160	56	24	50	32	8	20	7	90	12.5	265	10	395	12	126	165	130	200	12	3.5	M24X1.5
90L	140	36	180	205	170	125	160	56	24	50	32	8	20	7	90	12.5	265	10	425	12	126	165	130	200	12	3.5	M24X1.5
100L	160	40	230	255	180	140	182	63	28	60	40	8	24	7	100	14	310	12	435	14	153	215	180	250	14.5	4	M24X1.5
112M	190	45	230	255	200	140	195	70	28	60	40	8	24	7	112	14	310	12	475	12	144	215	180	250	14.5	4	M30X2
132S	216	52	270	310	230	140	205	89	38	80	56	10	33	8	132	16	365	12	535	13	167	265	230	300	14.5	4	M30X2
132M	216	52	270	310	230	178	245	89	38	80	56	10	33	8	132	16	365	12	550	13	167	265	230	300	14.5	4	M30X2
160M	254	67	320	340	260	210	305	108	42	110	80	12	37	8	160	19	420	14.5	730	15	267.5	300	250	350	18.5	5	M36X2
160L	254	67	320	340	260	254	325	108	42	110	80	12	37	8	160	19	420	14.5	760	15	267.5	300	250	350	18.5	5	M36X2
180M	279	74	355	390	285	241	330	121	48	110	80	14	42.5	9	180	22	430	14.5	805	15	277	300	250	350	18.5	5	M36X2
180L	279	74	355	390	285	279	370	121	48	110	80	14	42.5	9	180	22	430	14.5	835	15	277	300	250	350	18.5	5	M36X2
200L	318	85	395	445	320	305	370	133	55	110	90	16	49	10	200	25	475	18.5	890	17	300	350	300	400	18.5	5	M48X2
225S(4-6P)	356	80	435	495	350	286	355	149	60	140	100	18	53	11	225	28	560	18.5	865	19	340	400	350	450	18.5	5	M48X2
225M(2P)	356	80	435	495	350	311	380	149	55	110	80	16	49	10	225	28	560	18.5	865	19	310	400	350	450	18.5	5	M48X2
225M(4-6P)	356	80	435	465	350	311	380	149	60	140	100	18	53	11	225	28	560	18.5	895	19	340	400	350	450	18.5	5	M48X2
250M(2P)	406	88	495	550	390	349	440	168	60	140	100	18	53	11	250	33	635	24	995	20	360	500	450	550	18.5	5	M64X2
250M(4-6P)	406	88	495	550	390	349	440	168	65	140	100	18	58	11	250	33	635	24	995	20	360	500	450	550	18.5	5	M64X2
280S(2P)	457	90	550	630	435	368	495	190	65	140	100	18	58	11	280	35	705	24	1030	22	350	500	450	550	18.5	5	M64X2
280S(4-6P)	457	90	550	630	435	368	495	190	75	140	100	20	67.5	12	280	35	705	24	1030	22	350	500	450	550	18.5	5	M64X2
280M(2P)	457	90	550	630	435	419	535	190	65	140	100	18	58	11	280	35	705	24	1080	22	350	500	450	550	18.5	5	M64X2
280M(4-6P)	457	90	550	630	435	419	535	190	75	140	100	20	67.5	12	280	35	705	24	1080	22	350	500	450	550	18.5	5	M64X2
315S(2P)	508	120	635	645	530	406	515	216	65	140	100	18	58	11	315	45	845	28	1180	24	387	600	550	660	24	6	M64X2
315M(2P)	508	120	635	645	530	457	625	216	65	140	100	18	58	11	315	45	845	28	1210	24	387	600	550	660	24	6	M64X2
315L(2P)	508	120	635	645	530	508	625	216	65	140	100	18	58	11	315	45	845	28	1210	24	387	600	550	660	24	6	M64X2
315S(4-6P)	508	120	635	645	530	406	515	216	80	170	130	22	71	14	315	45	845	28	1290	24	417	600	550	660	24	6	M64X2
315M(4-6P)	508	120	635	645	530	457	625	216	80	170	130	22	71	14	315	45	845	28	1320	24	417	600	550	660	24	6	M64X2
315L(4-6P)	508	120	635	645	530	508	625	216	80	170	130	22	71	14	315	45	845	28	1320	24	417	600	550	660	24	6	M64X2
355M(2P)	610	125	735	735	655	560	775	254	75	140	110	20	67.5	12	355	49	1000	28	1500	25	420	740	680	800	24	6	M72X2
355L(2P)	610	125	735	735	655	630	775	254	75	140	110	20	67.5	12	355	49	1000	28	1500	25	420	740	680	800	24	6	M72X2
355M(4-6P)	610	125	735	735	655	560	775	254	95	170	140	25	86	14	355	49	1000	28	1530	25	450	740	680	800	24	6	M72X2
355L(4-6P)	610	125	735	735	655	630	875	254	95	170	140	25	86	14	355	49	1000	28	1630	25	450	740	680	800	24	6	M72X2

The 'R' dimensions is zero.

Dimensions flange mount B5 and V1

HE3-80 ~ 132

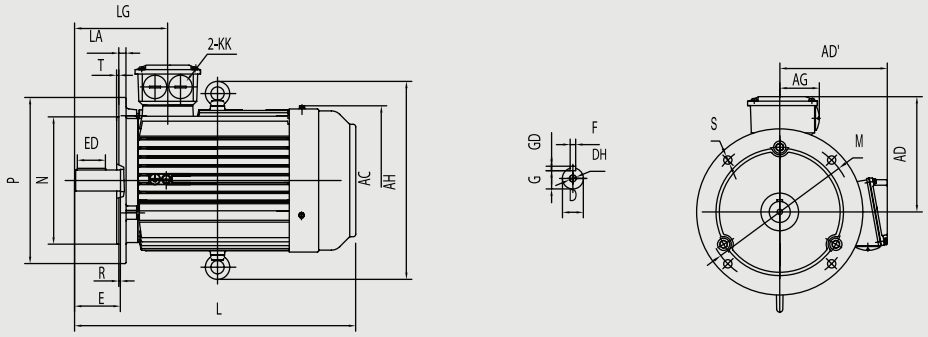

HE3-160 ~ 200

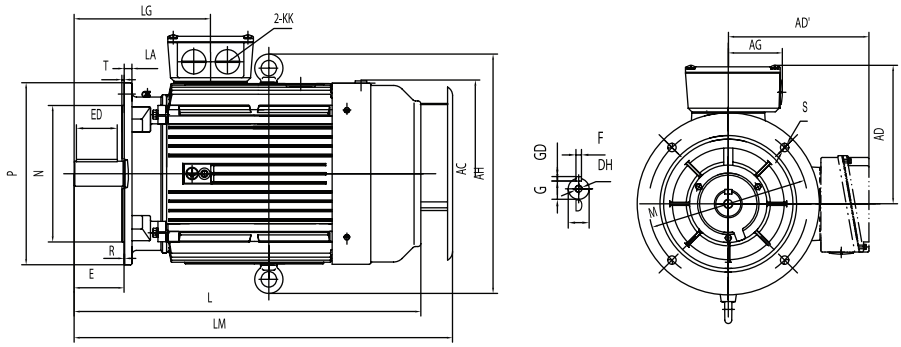

HE3-225 ~ 280

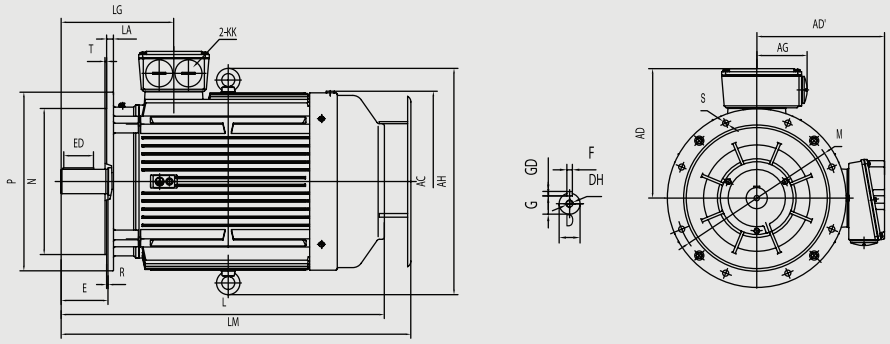

HE3-315 ~355V1

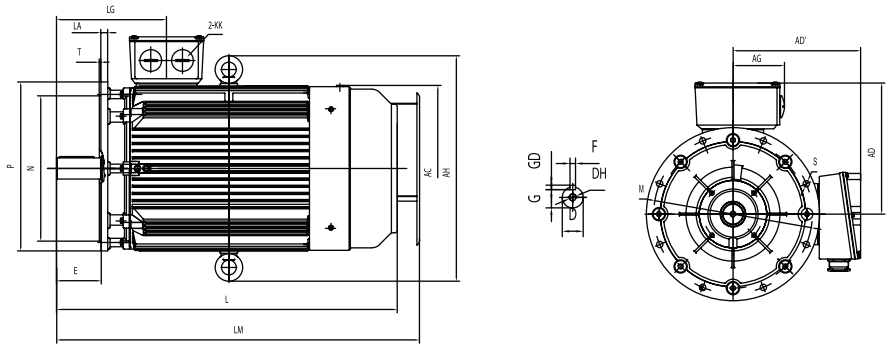

Dimensions flange mount B5 and V1

Frame	AC	D	AD	AD'	E	ED	F	G	GD	R	L	LA	LG	LM	M	N	P	S	T	KK
80	175	19	145	145	40	22	6	15.5	6	0	305	14	112	-	165	130	200	12	3.5	M24X1.5
90S	205	24	170	170	50	32	8	20	7	0	395	12	126	-	165	130	200	12	3.5	M24X1.5
90L	205	24	170	170	50	32	8	20	7	0	425	12	126	-	165	130	200	12	3.5	M24X1.5
100L	215	28	180	180	60	40	8	24	7	0	435	14	153	-	215	180	250	14.5	4	M24X1.5
112M	255	28	200	200	60	40	8	24	7	0	475	12	144	-	215	180	250	14.5	4	M30X2
132S	310	38	230	230	80	56	10	33	8	0	535	13	167	-	265	230	300	14.5	4	M30X2
132M	310	38	230	230	80	56	10	33	8	0	550	13	167	-	265	230	300	14.5	4	M30X2
160M	330	42	260	260	110	80	12	37	8	0	730	15	267.5	-	300	250	350	18.5	5	M36X2
160L	330	42	260	260	110	80	12	37	8	0	760	15	267.5	-	300	250	350	18.5	5	M36X2
180M	380	48	285	285	110	80	14	42.5	9	0	805	15	277	825	300	250	350	18.5	5	M36X2
180L	380	48	285	285	110	80	14	42.5	9	0	835	15	277	845	300	250	350	18.5	5	M36X2
200L	445	55	320	320	110	90	16	49	10	0	890	17	300	940	350	300	400	18.5	5	M48X2
225S(4-6P)	465	60	350	350	140	100	18	53	11	0	865	19	340	945	400	350	450	18.5	5	M48X2
225M(2P)	465	55	350	350	110	80	16	49	10	0	865	19	310	945	400	350	450	18.5	5	M48X2
225M(4-6P)	465	60	350	350	140	100	18	53	11	0	895	19	340	975	400	350	450	18.5	5	M48X2
250M(2P)	550	60	370	390	140	100	18	53	11	0	995	20	360	1095	500	450	550	18.5	5	M64X2
250M(4-6P)	550	65	370	390	140	100	18	58	11	0	995	20	360	1095	500	450	550	18.5	5	M64X2
280S(2P)	630	65	395	435	140	100	18	58	11	0	1030	22	350	1155	500	450	550	18.5	5	M64X2
280S(4-6P)	630	75	395	435	140	100	20	67.5	12	0	1030	22	350	1155	500	450	550	18.5	5	M64X2
280M(2P)	630	65	395	435	140	100	18	58	11	0	1080	22	350	1195	500	450	550	18.5	5	M64X2
280M(4-6P)	630	75	395	435	140	100	20	67.5	12	0	1080	22	350	1195	500	450	550	18.5	5	M64X2
315S(2P)	645	65	495	530	140	100	18	58	11	0	-	24	387	1280	600	550	660	24	6	M64X2
315M(2P)	645	65	495	530	140	100	18	58	11	0	-	24	387	1310	600	550	660	24	6	M64X2
315L(2P)	645	65	495	530	140	100	18	58	11	0	-	24	387	1310	600	550	660	24	6	M64X2
315S(4-6P)	645	80	495	530	170	130	22	71	14	0	-	24	417	1400	600	550	660	24	6	M64X2
315M(4-6P)	645	80	495	530	170	130	22	71	14	0	-	24	417	1430	600	550	660	24	6	M64X2
315L(4-6P)	645	80	495	530	170	130	22	71	14	0	-	24	417	1430	600	550	660	24	6	M64X2
355M(2P)V1	735	75	645	655	140	110	20	67.5	12	0	-	25	420	1590	740	680	800	24	6	M72X2
355L(2P)V1	735	75	645	655	140	110	20	67.5	12	0	-	25	420	1590	740	680	800	24	6	M72X2
355M(4-6P)V1	735	95	645	655	170	140	25	86	14	0	-	25	450	1620	740	680	800	24	6	M72X2
355L(4-6P)V1	735	95	645	655	170	140	25	86	14	0	-	25	450	1720	740	680	800	24	6	M72X2

The 'R' dimensions is zero.

Mounting dimensions 35512

HE3-35512 ~ B3

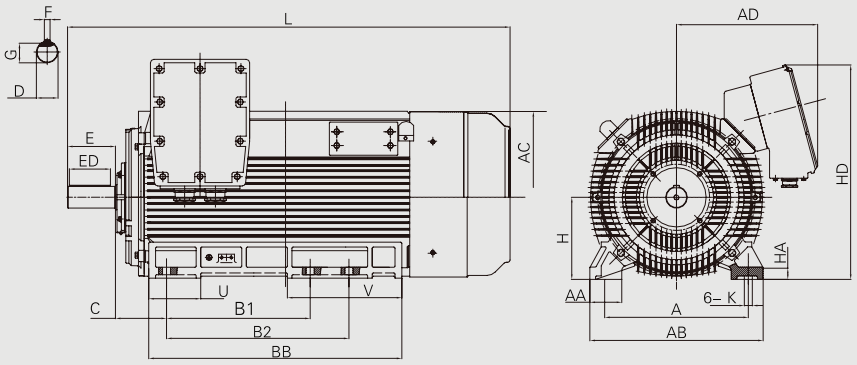

HE3-35512 ~ V1

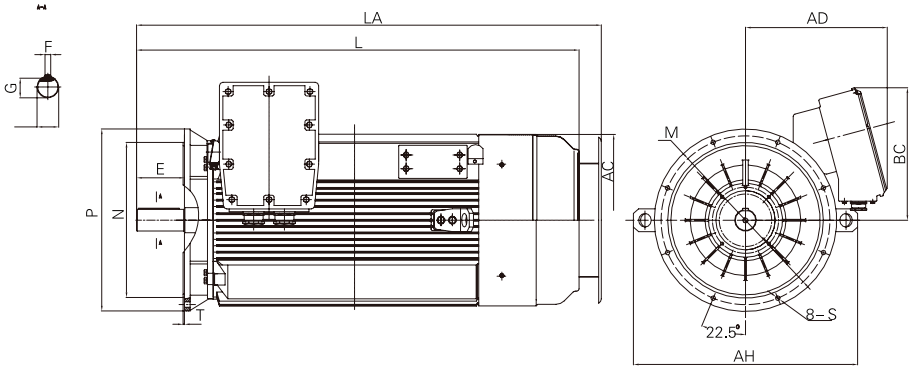

HE3-35512 ~ B35

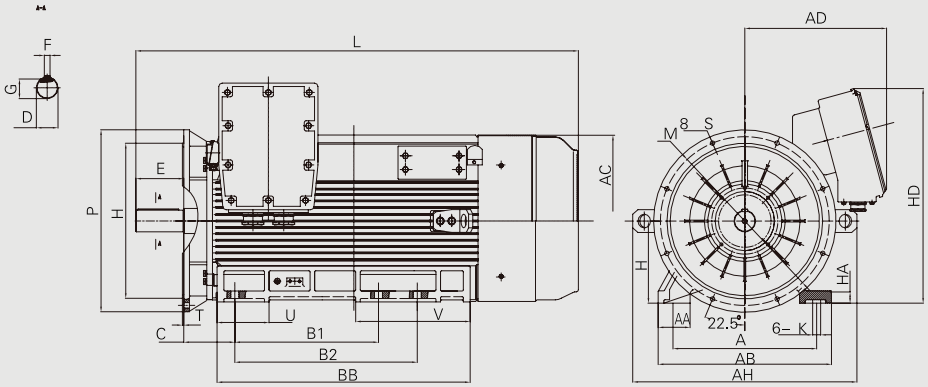

Frame	A	AA	AB	AC	B1	B2	BB	C	D	E	ED	F	G	H	HA	AD	HD	K	U	V	M	N	P	S	T	L	LA	AH	BC
35512-2	630	140	760	760	630	800	1100	224	80	170	160	22	71	355	49	630	950	35	228	502	840	780	900	24	6	1850	1950	980	600
35512-4-6	630	140	760	760	630	800	1100	224	110	210	200	28	100	355	49	630	950	35	228	502	840	780	900	24	6	1940	2040	980	600

Top terminal box

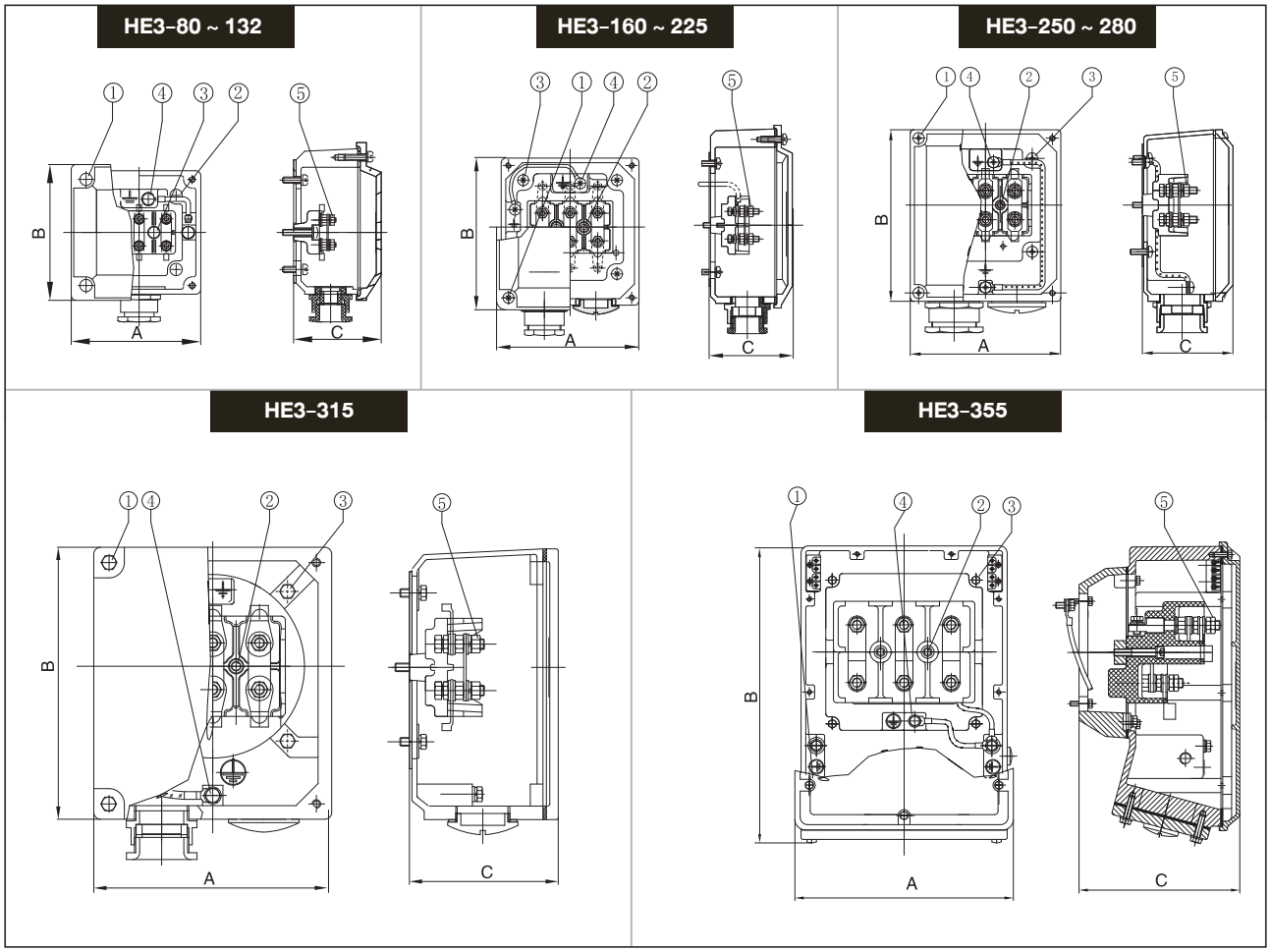

Frame	A	B	C	1	2	3	4	5	Gland size	Outlet(dia.)
HE3-80	107	107	67	M5X16	M5X25	M5X16	M5X12	M4	M24X1.5	Ø11
HE3-90-100	115	115	75	M5X16	M5X25	M5X16	M5X12	M4	M24X1.5	Ø11
HE3-112-132	124	130	80	M5X16	M5X25	M5X20	M5X16	M5	2XM30X2	2×Ø15
HE3-160-180	184	163	95	M5X16	M6X25	M6X16	M6X12	M6	2XM36X2	2×Ø25
HE3-200-225	215	192	112	M5X25	M8X35	M8X25	M8X16	M8	2XM48X2	2×Ø36
HE3-250-280	249	220	134	M5X25	M8X35	M8X25	M8X16	M10	2XM64X2	2×Ø51
HE3-315	323	283	180	M5X25	M8X45	M10X25	M10X20	M12	2XM64X2	2×Ø51
HE3-355	365	490	285	M12X30	M12X80	M12X30	M10X25	M20	2XM72X2	2×Ø60

Bearing & lubrication

bearing data

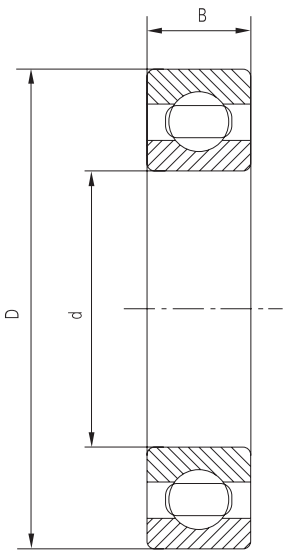

Frame	DE	NDE	d	D	B
HE3-80	6204ZZ	6204ZZ	20	47	14
HE3-90	6205ZZ	6205ZZ	25	52	15
HE3-100	6206ZZ	6206ZZ	30	62	16
HE3-110	6306ZZ	6306ZZ	30	72	19
HE3-132	6308ZZ	6308ZZ	40	90	23
HE3-160	6309	6309	45	100	25
HE3-180	6311	6311	55	120	29
HE3-200	6312	6312	60	130	31
HE3-225	6313	6313	65	140	33
HE3-250	6314	6314	70	150	35
HE3-250(V1)	6314	6314	70	150	35
HE3-280 2P	6314	6314	70	150	35
HE3-280 2P(V1)	6314	6314	70	150	35
HE3-280 4-6P	6317	6317	85	180	41
HE3-280 4-6P(V1)	6317	7317	85	180	41
HE3-315 2P	6316	6316	80	170	39
HE3-315 2P(V1)	6316	7316	80	170	39
HE3-315 4-6P	6319	6319	95	200	45
HE3-315 4-6P(V1)	6319	7319	95	200	45
HE3-355(2P) (B3,B35)	6319	6319	95	200	45
HE3-355 (2P)V1	6319	7319	95	200	45
HE3-355 (4-6P) (B3,B35)	6322	6322	110	240	50
HE3-355(4-6P)V1	6322	7322	110	240	50
HE3-35512(2P) (B3,B35)	6319/C3	319/C3	95	200	45
HE3-35512(4-6P) (B3,B35)	Nu324	6324	120	260	55
HE3-35512(2P) V1	6319C3	7319	95	200	45
HE3-35512(4-6P)V1	Nu324	7324	110	260	55

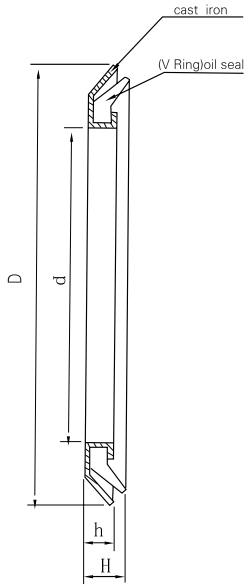

Motor type	Oil seal size	d	D	h	H
HE3-80	RB20 × 35 × 4.0	Ø20	Ø35	3.0	6.0
HE3-90	RB25 × 40 × 4.0	Ø25	Ø40	3.0	6.0
HE3-100	RB30 × 47 × 4.5	Ø30	Ø47	3.5	6.5
HE3-112	RB30 × 47 × 4.5	Ø30	Ø47	3.5	6.5
HE3-132	RB40 × 57 × 4.5	Ø40	Ø57	3.5	6.5
HE3-160	RB45 × 62 × 4.5	Ø45	Ø62	3.5	6.5
HE3-180	RB55 × 75 × 5.5	Ø55	Ø75	4.5	6.5
HE3-200	RB60 × 80 × 5.5	Ø60	Ø80	4.5	6.5
HE3-225	RB65 × 85 × 5.5	Ø65	Ø85	4.5	8.0
HE3-250	RB70 × 90 × 5.5	Ø70	Ø90	4.5	8.0
HE3-280-2	RB70 × 90 × 5.5	Ø70	Ø90	4.5	8.0
HE3-280-4.6	RB85 × 105 × 5.5	Ø85	Ø105	4.5	8.0
HE3-315-2	RB80 × 110 × 5.5	Ø80	Ø100	4.5	8.0
HE3-315-4.6	RB95 × 115 × 5.5	Ø95	Ø115	4.5	8.0
HE3-355-2	B95 x 120 x 12	Ø95	Ø120	-	12
HE3-355-4.6	B110 x 140 x 12	Ø110	Ø140	-	12
HE3-35512(2P)	B95 x 120 x 12	Ø95	Ø120	-	12
HE3-35512(4-6P)	B120 x 150 x 12	Ø120	Ø150	-	12

IE2 General Performance

2 pole – 3000 rpm synchronous speed 50Hz

Motors type	Rated output KW	Rated speed rpm	1FL 380V A	1FL 400V A	1FL 415V A	1FL 525V A	EFF %	Power factor cos ϕ	Rated torque N.m	TST/TFL	TM/TFL	IST/IFL	M of 1 kgm^2	Noise level LW dB(A)	Net weight kg
HE2-801-2	0.75	2855	1.8	1.7	1.6	1.3	77.4	0.83	2.5	2.4	2.5	6.5	0.001	62	18
HE2-802-2	1.1	2855	2.5	2.4	2.3	1.8	79.8	0.84	3.7	2.4	2.5	6.7	0.002	62	20
HE2-90S-2	1.5	2875	3.3	3.1	3.0	2.4	81.4	0.85	5.0	2.4	2.6	7.3	0.002	67	26
HE2-90L-2	2.2	2875	4.7	4.4	4.3	3.4	83.2	0.86	7.3	2.4	2.6	7.4	0.003	67	30
HE2-100L-2	3	2880	6.1	5.8	5.6	4.4	84.6	0.88	9.9	2.5	2.5	7.8	0.005	74	37
HE2-112M-2	4	2900	7.9	7.5	7.3	5.7	86.0	0.89	13.2	2.3	2.6	8.1	0.008	77	47
HE2-132S1-2	5.5	2900	10.8	10.2	9.9	7.8	87.2	0.89	18.1	2.3	2.5	7.9	0.014	79	65
HE2-132S2-2	7.5	2900	14.5	13.8	13.3	10.5	88.2	0.89	24.7	2.3	2.5	7.8	0.018	79	73
HE2-160M1-2	11	2940	21.0	19.9	19.2	15.2	89.6	0.89	35.7	2.3	2.5	7.5	0.051	81	122
HE2-160M2-2	15	2940	28.0	26.6	25.6	20.3	90.4	0.90	48.7	2.2	2.5	7.2	0.064	81	133
HE2-160L-2	18.5	2940	34.7	33.0	31.8	25.1	90.9	0.89	60.1	2.3	2.4	7.5	0.076	81	152
HE2-180M-2	22	2955	41.1	39.0	37.6	29.7	91.4	0.89	71.1	2.4	2.4	8.1	0.105	83	192
HE2-200L1-2	30	2965	55.5	52.8	50.9	40.2	92.2	0.89	96.6	2.2	2.5	7.5	0.179	84	252
HE2-200L2-2	37	2965	68.2	64.8	62.5	49.4	92.6	0.89	119.2	2.1	2.6	7.5	0.201	84	275
HE2-225M-2	45	2970	82.6	78.5	75.6	59.8	93.0	0.89	144.7	2.2	2.5	7.5	0.305	86	315
HE2-250M-2	55	2975	100.6	95.6	92.1	72.8	93.3	0.89	176.6	2.2	2.5	7.6	0.414	89	417
HE2-280S-2	75	2975	136.4	129.5	124.9	98.7	93.9	0.89	240.8	1.9	2.6	6.9	0.695	91	571
HE2-280M-2	90	2975	163.1	155.0	149.4	118.1	94.2	0.89	288.9	2.0	2.6	6.9	0.852	91	607
HE2-315S-2	110	2980	196.7	186.9	180.1	142.4	94.4	0.90	352.5	1.9	2.5	7.0	1.753	92	965
HE2-315M-2	132	2980	235.3	223.5	215.5	170.3	94.7	0.90	423.0	1.9	2.4	7.0	1.874	92	1067
HE2-315L1-2	160	2980	281.5	267.4	257.8	203.8	94.9	0.91	512.8	1.9	2.4	7.1	2.296	92	1151
HE2-315L-2	185	2980	325.5	309.2	298	235.6	94.8	0.91	592.9	1.8	2.2	7.1	2.3872	92	1205
HE2-315L2-2	200	2980	351.5	333.9	321.9	254.4	95.0	0.9	640.9	1.8	2.2	7.1	2.478	92	1253
HE2-355M1-2	220	2980	391.0	371.5	358.0	283.0	95.0	0.91	705.0	1.6	2.2	7.1	2.900	100	1540
HE2-355M2-2	250	2980	444.2	422.0	406.8	321.6	95.0	0.91	801.2	1.6	2.2	7.1	3.498	100	1638
HE2-355L1-2	280	2980	497.6	472.6	455.6	360.0	95.0	0.91	897.3	1.6	2.2	7.2	4.095	100	1752
HE2-355L2-2	315	2980	559.8	531.7	512.6	405.0	95.0	0.91	1009.5	1.6	2.2	7.2	4.436	100	1834
HE2-3551-2	355	2980	631.0	599.3	577.6	456.6	95.0	0.91	1137.6	1.6	2.2	7.2	4.959	104	1936
HE2-3552-2	375	2980	666.0	633.0	610.2	482.3	95.0	0.90	1201.7	1.6	2.2	7.2	5.176	104	2180

IE2 General Performance

4 pole – 1500 rpm synchronous speed 50Hz

Motors type	Rated output KW	Rated speed rpm	1FL 380V A	1FL 400V A	1FL 415V A	1FL 525V A	EFF %	Power factor cos ϕ	Rated torque N.m	TST/TFL	TM/TFL	IST/IFL	M of 1 kgm^2	Noise level LW dB(A)	Net weight kg
HE2-802-4	0.75	1400	1.9	1.8	1.7	1.3	79.6	0.77	5.1	2.4	2.5	6.2	0.003	56	20
HE2-90S-4	1.1	1425	2.6	2.5	2.4	1.9	81.5	0.78	7.4	2.4	2.5	6.4	0.004	59	26
HE2-90L-4	1.5	1425	3.5	3.3	3.2	2.5	82.8	0.79	10.1	2.3	2.4	6.5	0.006	59	29
HE2-100L1-4	2.2	1440	4.9	4.7	4.5	3.5	84.3	0.81	14.6	2.4	2.5	7.2	0.010	64	37
HE2-100L2-4	3	1440	6.5	6.2	6.0	4.7	85.5	0.82	19.9	2.4	2.5	7.1	0.013	64	40
HE2-112M-4	4	1450	8.7	8.2	7.9	6.3	86.7	0.81	26.3	2.3	2.5	7.3	0.019	65	52
HE2-132S-4	5.5	1455	11.6	11.0	10.6	8.4	87.7	0.82	36.1	2.0	2.4	7.3	0.036	71	70
HE2-132M-4	7.5	1455	15.5	14.7	14.2	11.2	88.7	0.83	49.2	2.0	2.5	7.1	0.047	71	84
HE2-160M-4	11	1465	22.4	21.3	20.5	16.2	89.9	0.83	71.7	2.2	2.4	7.4	0.103	73	135
HE2-160L-4	15	1465	29.9	28.4	27.4	21.6	90.8	0.85	97.8	2.2	2.6	7.5	0.131	73	156
HE2-180M-4	18.5	1470	35.8	34.0	32.8	25.9	91.3	0.86	120.2	2.1	2.6	7.6	0.183	76	196
HE2-180L-4	22	1475	42.4	40.3	38.8	30.7	91.7	0.86	142.4	2.1	2.6	7.7	0.219	76	215
HE2-200L-4	30	1475	58.0	55.1	53.1	42.0	92.4	0.85	194.2	2.1	2.5	6.9	0.297	76	275
HE2-225S-4	37	1480	70.5	67.0	64.6	51.0	92.7	0.86	238.8	2.1	2.4	6.8	0.578	78	328
HE2-225M-4	45	1480	85.4	81.1	78.2	61.8	93.1	0.86	290.4	2.2	2.5	7.2	0.659	78	355
HE2-250M-4	55	1480	103.9	98.7	95.2	75.2	93.5	0.86	354.9	2.2	2.5	7.0	0.818	79	453
HE2-280S-4	75	1485	139.3	132.4	127.6	100.9	94.0	0.87	482.3	2.3	2.6	6.7	1.571	80	596
HE2-280M-4	90	1485	164.8	156.5	150.9	119.3	94.3	0.88	578.8	2.2	2.6	6.9	1.964	80	693
HE2-315S-4	110	1485	198.7	188.8	182.0	143.8	94.5	0.89	707.4	2.1	2.6	6.9	3.247	88	1012
HE2-315M-4	132	1485	238.0	226.1	217.9	172.2	94.7	0.89	848.9	2.1	2.6	6.9	3.527	88	1147
HE2-315L1-4	160	1485	284.6	270.4	260.6	206.0	94.9	0.90	1029.0	2.1	2.5	6.9	4.087	88	1224
HE2-315L-4	185	1485	329	312.7	301.3	297	94.9	0.90	1189	2.1	2.2	6.9	4.927	88	1295
HE2-315L2-4	200	1485	355.0	337.3	258.1	257.0	95.1	0.90	1286.2	2.1	2.6	6.9	5.374	88	1331
HE2-355M1-4	220	1490	390.5	371.0	357.6	282.7	95.1	0.90	1410.1	2.0	2.2	6.9	7.636	95	1620
HE2-355M2-4	250	1490	448.7	426.3	411.0	324.8	95.1	0.89	1602.3	2.0	2.2	6.9	8.404	95	1650
HE2-355L1-4	280	1490	502.6	477.5	460.2	353.8	95.1	0.89	1794.6	2.0	2.2	6.9	9.164	95	1752
HE2-355L2-4	315	1490	565.5	537.2	517.8	409.2	95.1	0.89	2019.0	2.0	2.2	6.9	9.927	95	1804
HE2-3551-4	355	1490	637.3	605.4	583.5	461.3	95.1	0.89	2275.3	1.7	2.2	6.5	11.157	102	2083
HE2-3552-4	375	1490	673.0	639.5	616.4	487.2	95.1	0.89	2403.5	1.7	2.2	6.5	12.600	102	2160

IE2 General Performance

6 pole – 1000 rpm synchronous speed 50Hz

Motors type	Rated output KW	Rated speed rpm	1FL 380V A	1FL 400V A	1FL 415V A	1FL 525V A	EFF %	Power factor cos ϕ	Rated torque N.m	TST/TFL	TM/TFL	IST/IFL	M of 1 kgm^2	Noise level LW dB(A)	Net weight kg
HE2-90S-6	0.75	935	2.1	2.0	1.9	1.5	76.1	0.71	7.7	2.2	2.4	5.6	0.005	57	24
HE2-90L-6	1.1	940	2.9	2.8	2.7	2.1	78.2	0.73	11.2	2.2	2.5	5.5	0.008	57	28
HE2-100L-6	1.5	945	3.9	3.7	3.6	2.8	79.8	0.73	15.2	2.1	2.4	5.6	0.013	61	34
HE2-112M-6	2.2	950	5.6	5.3	5.1	4.0	82.0	0.73	22.1	2.1	2.3	6.0	0.020	65	45
HE2-132S-6	3	960	7.6	7.2	6.9	5.5	83.5	0.72	29.8	2.2	2.4	6.4	0.038	69	60
HE2-132M1-6	4	960	9.7	9.2	8.9	7.0	84.7	0.74	39.8	2.1	2.4	6.5	0.050	69	69
HE2-132M2-6	5.5	960	12.8	12.1	11.7	9.3	86.0	0.76	54.7	2.1	2.3	6.4	0.066	69	82
HE2-160M-6	7.5	970	16.7	15.9	15.3	12.1	87.5	0.78	73.8	2.3	2.5	6.8	0.121	73	116
HE2-160L-6	11	970	23.8	22.6	21.8	17.2	88.9	0.79	108.3	2.1	2.5	6.7	0.161	73	143
HE2-180L-6	15	975	30.6	29.0	28.0	22.1	89.8	0.83	146.9	2.2	2.4	7.3	0.264	73	181
HE2-200L1-6	18.5	975	38.3	36.4	35.1	27.7	90.6	0.83	181.2	2.1	2.5	7.0	0.407	73	230
HE2-200L2-6	22	975	44.7	42.5	41.0	32.4	91.1	0.85	215.5	2.1	2.4	7.0	0.459	73	239
HE2-225M-6	30	985	60.6	57.5	55.4	43.8	91.8	0.85	290.9	2.3	2.3	6.6	0.648	74	301
HE2-250M-6	37	985	73.3	69.6	67.1	53.1	92.4	0.85	358.7	2.3	2.6	7.0	0.979	76	387
HE2-280S-6	45	985	86.8	82.4	79.5	62.8	92.7	0.85	436.3	2.1	2.5	6.8	1.790	78	501
HE2-280M-6	55	985	104.4	99.2	95.6	75.5	93.1	0.86	533.2	2.2	2.5	7.1	2.164	78	547
HE2-315S-6	75	990	144.6	137.4	132.4	104.7	93.8	0.84	723.5	2.1	2.5	6.5	4.279	83	976
HE2-315M-6	90	990	171.0	162.4	156.5	123.7	94.1	0.85	868.2	2.0	2.5	6.4	5.017	83	1007
HE2-315L1-6	110	990	208.3	197.9	190.7	150.8	94.4	0.85	1061.1	2.1	2.5	6.5	5.607	83	1097
HE2-315L2-6	132	990	246.5	234.2	225.7	178.4	94.6	0.86	1273.3	2.1	2.5	6.6	6.640	83	1168
HE2-355M1-6	160	990	298.2	283.3	273.0	215.8	94.8	0.86	1543.4	2.0	2.0	6.7	9.555	85	1554
HE2-355M-6	185	990	344.8	327.5	315.7	249.6	94.8	0.86	1784.6	2.0	2.0	6.8	10.511	85	1691
HE2-355M2-6	200	990	367.6	349.3	336.7	266.0	95.0	0.87	1929.3	2.0	2.0	6.8	11.944	85	1768
HE2-355L1-6	220	990	409.1	388.7	374.6	296.1	95.0	0.86	2122.2	2.0	2.0	6.8	12.899	85	1838
HE2-355L2-6	250	990	464.9	441.7	425.7	336.5	95.0	0.86	2411.6	2.0	2.0	6.8	13.377	85	1902
HE2-3551-6	280	990	520.7	494.7	476.8	376.9	95.0	0.86	2701.0	2.0	2.0	6.8	13.855	91	2011
HE2-3552-6	315	990	585.8	556.5	536.4	424.0	95.0	0.86	3038.6	2.0	2.0	6.8	14.333	91	2090

Dimensions foot mount B3

HE2–80 ~ 132

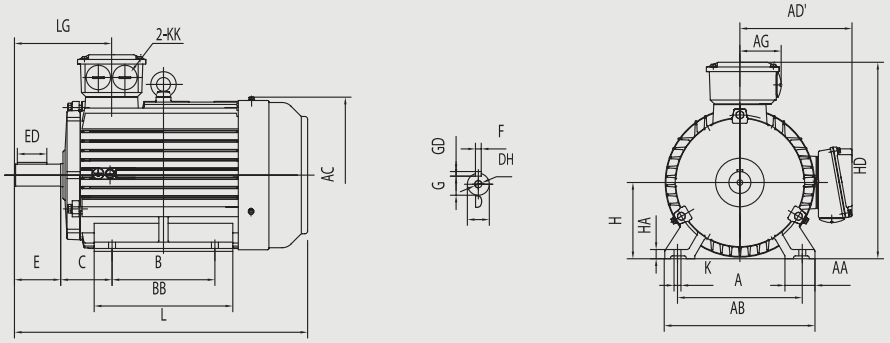

HE2–160 ~ 200

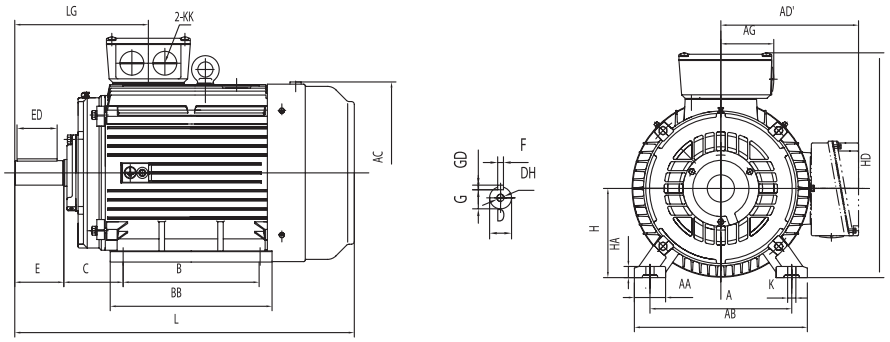

HE2–225 ~ 280

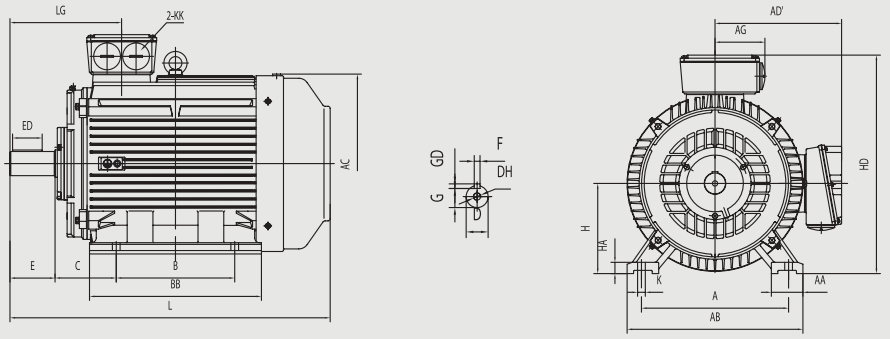

HE2–315 ~355

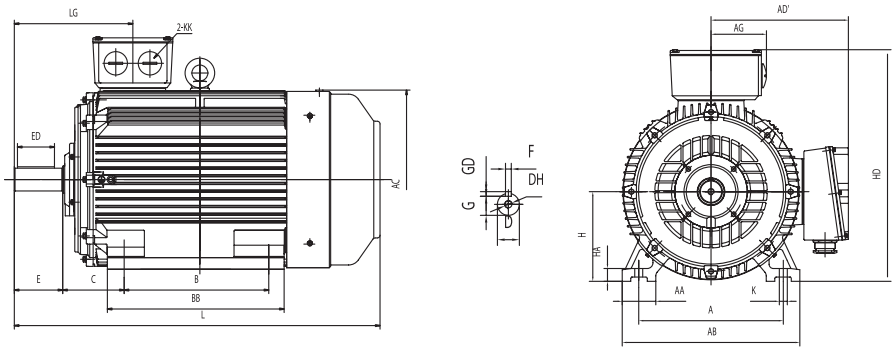

Dimensions foot mount B3

Frame	A	AA	AB	AC	AD'	B	BB	C	D	E	ED	F	G	GD	H	HA	HD	K	KK	L	LG
80	125	34	165	175	140	100	142	50	19	40	22	6	15.5	6	80	10	220	10	M24X1.5	301	112
90S	140	36	180	195	150	100	180	56	24	50	32	8	20	7	90	12.5	260	10	M24X1.5	360	126
90L	140	36	180	195	150	125	210	56	24	50	32	8	20	7	90	12.5	260	10	M24X1.5	390	126
100L	160	40	205	215	160	140	233	63	28	60	40	8	24	7	100	14	275	12	M24X1.5	435	153
112M	190	45	230	240	185	140	252	70	28	60	40	8	24	7	112	14	310	12	M30X2	480	144
132S	216	52	270	275	205	140	220	89	38	80	56	10	33	8	132	16	345	12	M30X2	510	167
132M	216	52	270	275	205	178	258	89	38	80	56	10	33	8	132	16	345	12	M30X2	550	167
160M	254	65	320	330	250	210	305	108	42	110	80	12	37	8	160	19	425	14.5	M36X2	667	270
160L	254	65	320	330	250	254	325	108	42	110	80	12	37	8	160	19	425	14.5	M36X2	689	270
180M	279	74	350	380	270	241	330	121	48	110	80	14	42.5	9	180	22	460	14.5	M36X2	732	277
180L	279	74	350	380	270	279	370	121	48	110	80	14	42.5	9	180	22	460	14.5	M36X2	780	277
200L	318	85	395	420	325	305	370	133	55	110	90	16	49	10	200	25	475	18.5	M48X2	779	298
225S(4-6P)	356	80	436	465	335	286	355	149	60	140	100	18	53	11	225	28	560	18.5	M48X2	836	340
225M(2P)	356	80	436	465	335	311	380	149	55	110	80	16	49	10	225	28	560	18.5	M48X2	831	310
225M(4-6P)	356	80	436	465	335	311	380	149	60	140	100	18	53	11	225	28	560	18.5	M48X2	866	340
250M(2P)	406	88	495	520	370	349	440	168	60	140	100	18	53	11	250	33	620	24	M64X2	936	360
250M(4-6P)	406	88	495	520	370	349	440	168	65	140	100	18	58	11	250	33	620	24	M64X2	942	360
280S(2P)	457	90	550	570	395	368	495	190	65	140	100	18	58	11	280	35	685	24	M64X2	970	350
280S(4-6P)	457	90	550	570	395	368	495	190	75	140	100	20	67.5	12	280	35	685	24	M64X2	975	350
280M(2P)	457	90	550	570	395	419	535	190	65	140	100	18	58	11	280	35	685	24	M64X2	1020	350
280M(4-6P)	457	90	550	570	395	419	535	190	75	140	100	20	67.5	12	280	35	685	24	M64X2	1015	350
315S(2P)	508	120	635	650	495	406	565	216	65	140	100	18	58	11	315	45	820	28	M64X2	1160	387
315M(2P)	508	120	635	650	495	457	675	216	65	140	100	18	58	11	315	45	820	28	M64X2	1270	387
315L(2P)	508	120	635	650	495	508	675	216	65	140	100	18	58	11	315	45	820	28	M64X2	1270	387
315S(4-6P)	508	120	635	650	495	406	515	216	80	170	130	22	71	14	315	45	820	28	M64X2	1207	417
315M(4-6P)	508	120	635	650	495	457	625	216	80	170	130	22	71	14	315	45	820	28	M64X2	1317	417
315L(4-6P)	508	120	635	650	495	508	625	216	80	170	130	22	71	14	315	45	820	28	M64X2	1317	417
355M(2P)	610	125	735	735	650	560	775	254	75	140	110	20	67.5	12	355	49	1000	28	M72X2	1500	420
355L(2P)	610	125	735	735	650	630	775	254	75	140	110	20	67.5	12	355	49	1000	28	M72X2	1500	420
355M(4-6P)	610	125	735	735	650	560	775	254	95	170	140	25	86	14	355	49	1000	28	M72X2	1530	450
355L(4-6P)	610	125	735	735	650	630	875	254	95	170	140	25	86	14	355	49	1000	28	M72X2	1630	450

Dimensions foot-flange mount B35

HE2-80 ~ 132

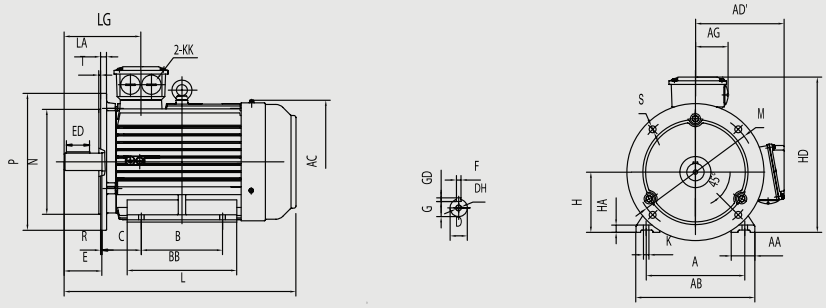

HE2-160 ~ 200

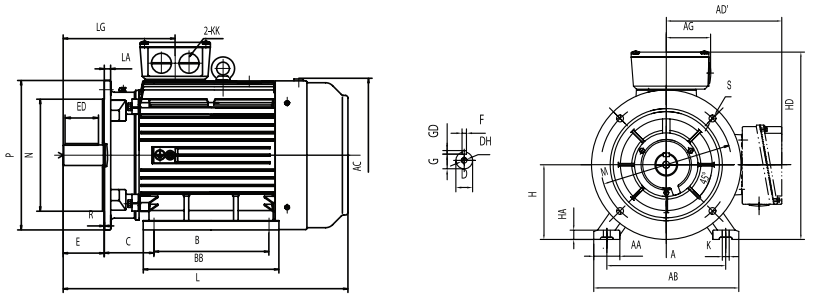

HE2-225 ~ 280

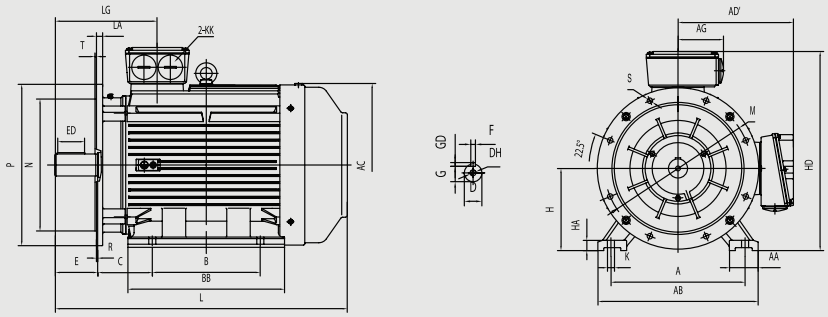

HE2-315 ~ 355

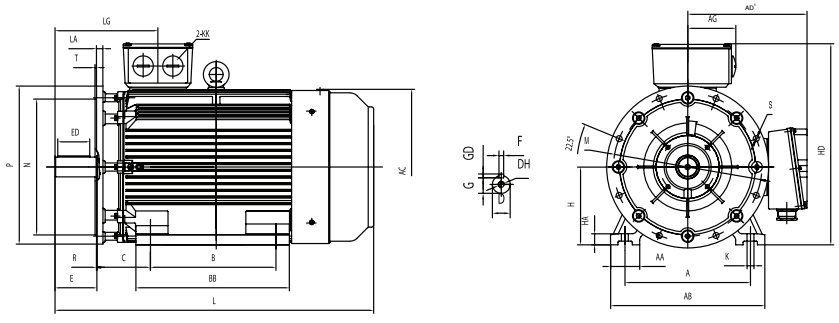

Dimensions foot-flange mount B35

Frame	A	AA	AB	AC	AD'	B	BB	C	D	E	ED	F	G	GD	H	HA	HD	K	L	LA	LG	M	N	P	S	T	KK
80	125	34	160	175	140	100	130	50	19	40	22	6	15.5	6	80	10	220	10	301	14	112	165	130	200	12	3.5	M24X1.5
90S	140	36	180	190	150	100	160	56	24	50	32	8	20	7	90	12.5	260	10	360	12	126	165	130	200	12	3.5	M24X1.5
90L	140	36	180	190	150	125	160	56	24	50	32	8	20	7	90	12.5	260	10	390	12	126	165	130	200	12	3.5	M24X1.5
100L	160	40	200	215	160	140	182	63	28	60	40	8	24	7	100	14	270	12	435	14	153	215	180	250	14.5	4	M24X1.5
112M	190	45	230	236	185	140	195	70	28	60	40	8	24	7	112	14	300	12	480	12	144	215	180	250	14.5	4	M30X2
132S	216	52	265	275	205	140	205	89	38	80	56	10	33	8	132	16	345	12	510	13	167	265	230	300	14.5	4	M30X2
132M	216	52	265	275	205	178	245	89	38	80	56	10	33	8	132	16	345	12	550	13	167	265	230	300	14.5	4	M30X2
160M	254	67	320	330	250	210	305	108	42	110	80	12	37	8	160	19	420	14.5	667	15	267.5	300	250	350	18.5	5	M36X2
160L	254	67	320	330	250	254	325	108	42	110	80	12	37	8	160	19	420	14.5	689	15	267.5	300	250	350	18.5	5	M36X2
180M	279	74	350	380	270	241	330	121	48	110	80	14	42.5	9	180	22	430	14.5	732	15	277	300	250	350	18.5	5	M36X2
180L	279	74	350	380	270	279	370	121	48	110	80	14	42.5	9	180	22	430	14.5	780	15	277	300	250	350	18.5	5	M36X2
200L	318	85	395	420	325	305	370	133	55	110	90	16	49	10	200	25	475	18.5	779	17	300	350	300	400	18.5	5	M48X2
225S(4-6P)	356	80	436	465	335	286	355	149	60	140	100	18	53	11	225	28	560	18.5	836	19	340	400	350	450	18.5	5	M48X2
225M(2P)	356	80	436	465	335	311	380	149	55	110	80	16	49	10	225	28	560	18.5	831	19	310	400	350	450	18.5	5	M48X2
225M(4-6P)	356	80	436	465	335	311	380	149	60	140	100	18	53	11	225	28	560	18.5	866	19	340	400	350	450	18.5	5	M48X2
250M(2P)	406	88	495	520	370	349	440	168	60	140	100	18	53	11	250	33	620	24	936	20	360	500	450	550	18.5	5	M64X2
250M(4-6P)	406	88	495	520	370	349	440	168	65	140	100	18	58	11	250	33	620	24	942	20	360	500	450	550	18.5	5	M64X2
280S(2P)	457	90	550	570	395	368	495	190	65	140	100	18	58	11	280	35	685	24	970	22	350	500	450	550	18.5	5	M64X2
280S(4-6P)	457	90	550	570	395	368	495	190	75	140	100	20	67.5	12	280	35	685	24	975	22	350	500	450	550	18.5	5	M64X2
280M(2P)	457	90	550	570	395	419	535	190	65	140	100	18	58	11	280	35	685	24	1020	22	350	500	450	550	18.5	5	M64X2
280M(4-6P)	457	90	550	570	395	419	535	190	75	140	100	20	67.5	12	280	35	685	24	1015	22	350	500	450	550	18.5	5	M64X2
315S(2P)	508	120	635	650	495	406	515	216	65	140	100	18	58	11	315	45	820	28	1160	24	387	600	550	660	24	6	M64X2
315M(2P)	508	120	635	650	495	457	625	216	65	140	100	18	58	11	315	45	820	28	1270	24	387	600	550	660	24	6	M64X2
315L(2P)	508	120	635	650	495	508	625	216	65	140	100	18	58	11	315	45	820	28	1270	24	387	600	550	660	24	6	M64X2
315S(4-6P)	508	120	635	650	495	406	515	216	80	170	130	22	71	14	315	45	820	28	1207	24	417	600	550	660	24	6	M64X2
315M(4-6P)	508	120	635	650	495	457	625	216	80	170	130	22	71	14	315	45	820	28	1317	24	417	600	550	660	24	6	M64X2
315L(4-6P)	508	120	635	650	495	508	625	216	80	170	130	22	71	14	315	45	820	28	1317	24	417	600	550	660	24	6	M64X2
355M(2P)	610	125	735	735	650	560	775	254	75	140	110	20	67.5	12	355	49	1000	28	1500	25	420	740	680	800	24	6	M72X2
355L(2P)	610	125	735	735	650	630	775	254	75	140	110	20	67.5	12	355	49	1000	28	1500	25	420	740	680	800	24	6	M72X2
355M(4-6P)	610	125	735	735	650	560	775	254	95	170	140	25	86	14	355	49	1000	28	1530	25	450	740	680	800	24	6	M72X2
355L(4-6P)	610	125	735	735	650	630	875	254	95	170	140	25	86	14	355	49	1000	28	1630	25	450	740	680	800	24	6	M72X2

The 'R' dimensions is zero.

Dimensions flange mount B5 and V1

HE2-80 ~ 132

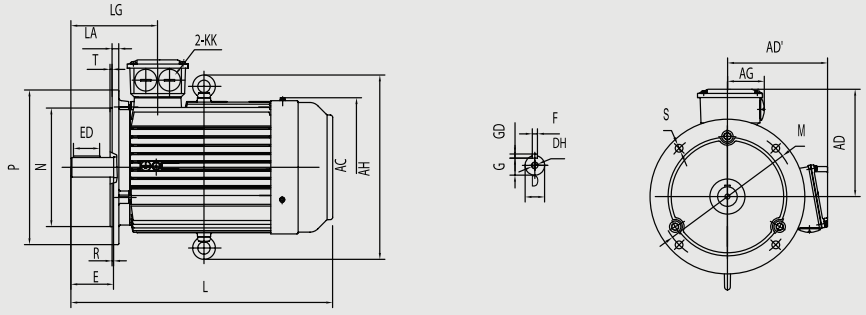

HE2 -160 ~ 200

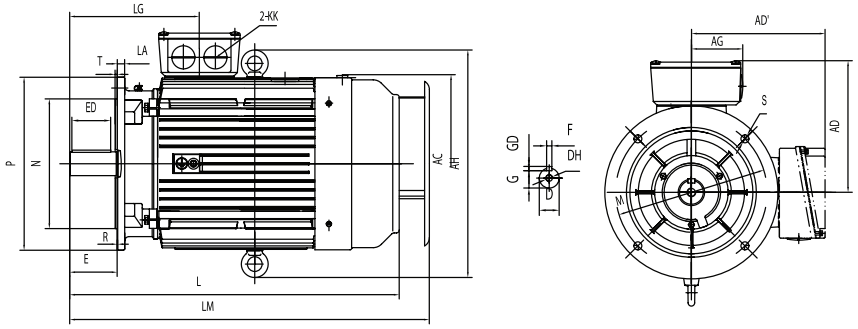

HE2-225 ~ 280

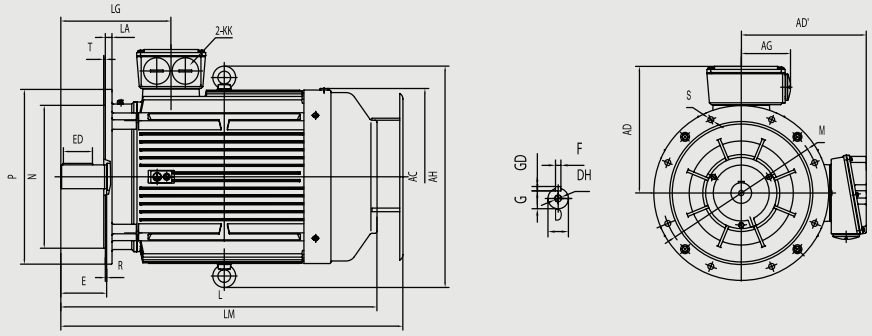

HE2-315 ~ 355V1

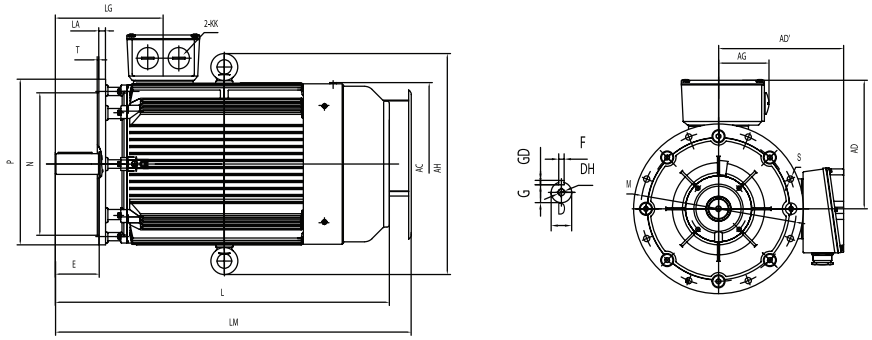

Dimensions flange mount B5 and V1

Frame	AC	D	AD	AD'	E	ED	F	G	GD	R	L	LA	LG	LM	M	N	P	S	T	KK
80	175	19	145	140	40	22	6	15.5	6	0	301	14	112	-	165	130	200	12	3.5	M24X1.5
90S	195	24	165	150	50	32	8	20	7	0	360	12	126	-	165	130	200	12	3.5	M24X1.5
90L	195	24	165	150	50	32	8	20	7	0	390	12	126	-	165	130	200	12	3.5	M24X1.5
100L	215	28	180	160	60	40	8	24	7	0	435	14	153	-	215	180	250	14.5	4	M24X1.5
112M	240	28	190	185	60	40	8	24	7	0	480	12	144	-	215	180	250	14.5	4	M30X2
132S	275	38	210	205	80	56	10	33	8	0	510	13	167	-	265	230	300	14.5	4	M30X2
132M	275	38	210	205	80	56	10	33	8	0	550	13	167	-	265	230	300	14.5	4	M30X2
160M	330	42	255	250	110	80	12	37	8	0	667	15	267.5	732	300	250	350	18.5	5	M36X2
160L	330	42	255	250	110	80	12	37	8	0	689	15	267.5	754	300	250	350	18.5	5	M36X2
180M	380	48	270	270	110	80	14	42.5	9	0	732	15	277	807	300	250	350	18.5	5	M36X2
180L	380	48	270	270	110	80	14	42.5	9	0	780	15	277	855	300	250	350	18.5	5	M36X2
200L	420	55	325	325	110	90	16	49	10	0	779	17	300	864	350	300	400	18.5	5	M48X2
225S(4-6P)	465	60	335	335	140	100	18	53	11	0	836	19	340	905	400	350	450	18.5	5	M48X2
225M(2P)	465	55	335	335	110	80	16	49	10	0	831	19	310	900	400	350	450	18.5	5	M48X2
225M(4-6P)	465	60	335	335	140	100	18	53	11	0	866	19	340	935	400	350	450	18.5	5	M48X2
250M(2P)	520	60	370	370	140	100	18	53	11	0	936	20	360	1062	500	450	550	18.5	5	M64X2
250M(4-6P)	520	65	370	370	140	100	18	58	11	0	942	20	360	1068	500	450	550	18.5	5	M64X2
280S(2P)	570	65	395	395	140	100	18	58	11	0	970	22	350	1100	500	450	550	18.5	5	M64X2
280S(4-6P)	570	75	395	395	140	100	20	67.5	12	0	975	22	350	1090	500	450	550	18.5	5	M64X2
280M(2P)	570	65	395	395	140	100	18	58	11	0	1020	22	350	1100	500	450	550	18.5	5	M64X2
280M(4-6P)	570	75	395	395	140	100	20	67.5	12	0	1015	22	350	1090	500	450	550	18.5	5	M64X2
315S(2P)	650	65	495	495	140	100	18	58	11	0	1160	24	387	1258	600	550	660	24	6	M64X2
315M(2P)	650	65	495	495	140	100	18	58	11	0	-	24	387	1368	600	550	660	24	6	M64X2
315L(2P)	650	65	495	495	140	100	18	58	11	0	-	24	387	1368	600	550	660	24	6	M64X2
315S(4-6P)	650	80	495	495	170	130	22	71	14	0	-	24	417	1288	600	550	660	24	6	M64X2
315M(4-6P)	650	80	495	495	170	130	22	71	14	0	-	24	417	1398	600	550	660	24	6	M64X2
315L(4-6P)	650	80	495	495	170	130	22	71	14	0	-	24	417	1398	600	550	660	24	6	M64X2
355M(2P)V1	735	75	645	650	140	110	20	67.5	12	0	-	25	420	1590	740	680	800	24	6	M72X2
355L(2P)V1	735	75	645	650	140	110	20	67.5	12	0	-	25	420	1590	740	680	800	24	6	M72X2
355M(4-6P)V1	735	95	645	650	170	140	25	86	14	0	-	25	450	1620	740	680	800	24	6	M72X2
355L(4-6P)V1	735	95	645	650	170	140	25	86	14	0	-	25	450	1720	740	680	800	24	6	M72X2

The 'R' dimensions is zero.

Mounting dimensions 35512

HE2-35512 ~ B3

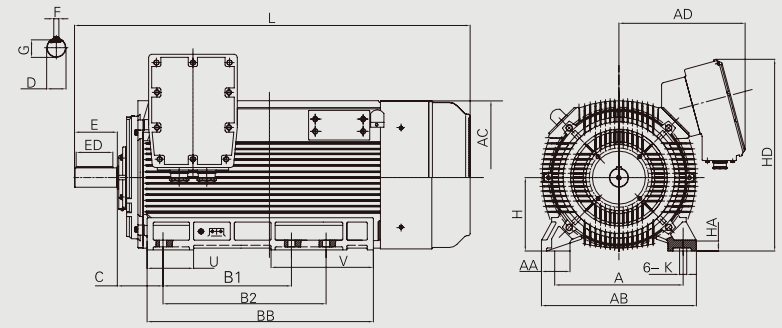

HE2-35512 ~ V1

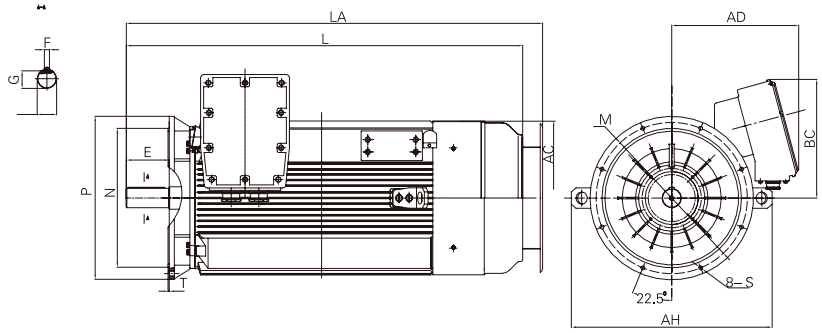

HE2-35512 ~ B35

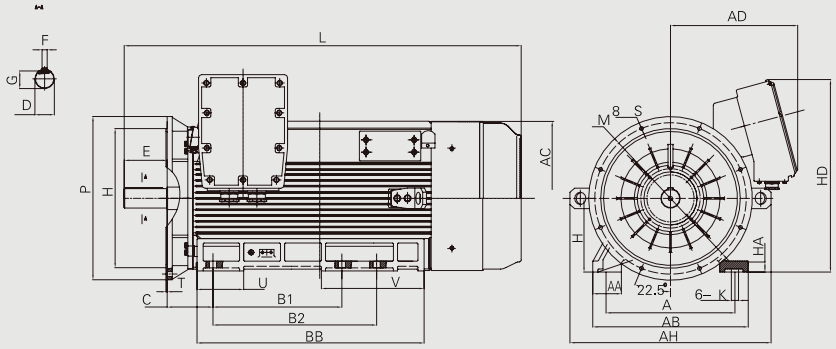

Frame	A	AA	AB	AC	B1	B2	BB	C	D	E	ED	F	G	H	HA	AD	HD	K	U	V	M	N	P	S	T	L	LA	AH	BC
35512-2	630	140	760	760	630	800	1100	224	80	170	160	22	71	355	49	630	950	35	228	502	840	780	900	24	6	1850	1950	980	600
35512-4-6	630	140	760	760	630	800	1100	224	110	210	200	28	100	355	49	630	950	35	228	502	840	780	900	24	6	1940	2040	980	600

Top terminal box

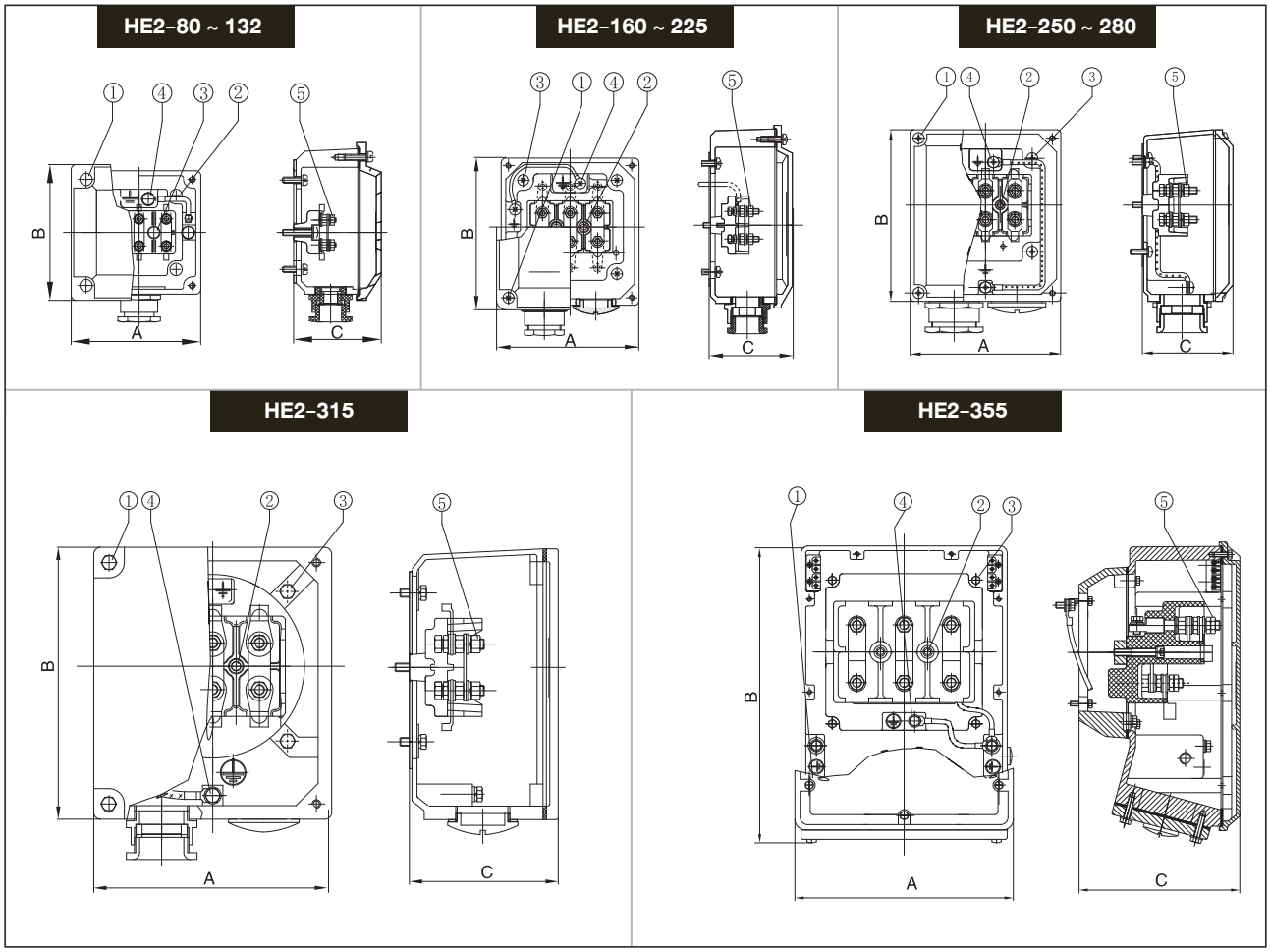

Frame	A	B	C	1	2	3	4	5	Gland size	Outlet (dia.)
HE2-80	107	107	67	M5X16	M5X25	M5X16	M5X12	M4	M24X1.5	Ø11
HE2-90-100	115	115	75	M5X16	M5X25	M5X16	M5X12	M4	M24X1.5	Ø11
HE2-112-132	124	130	80	M5X16	M5X25	M5X20	M5X16	M5	2XM30X2	2×Ø15
HE2-160-180	184	163	95	M5X16	M6X25	M6X16	M6X12	M6	2XM36X2	2×Ø25
HE2-200-225	215	192	112	M5X25	M8X35	M8X25	M8X16	M8	2XM48X2	2×Ø36
HE2-250-280	249	220	134	M5X25	M8X35	M8X25	M8X16	M10	2XM64X2	2×Ø51
HE2-315	323	283	180	M5X25	M8X45	M10X25	M10X20	M12	2XM64X2	2×Ø51
HE2-355	365	490	285	M12X30	M12X80	M12X30	M10X25	M20	2XM72X2	2×Ø60

Bearing & lubrication

bearing data

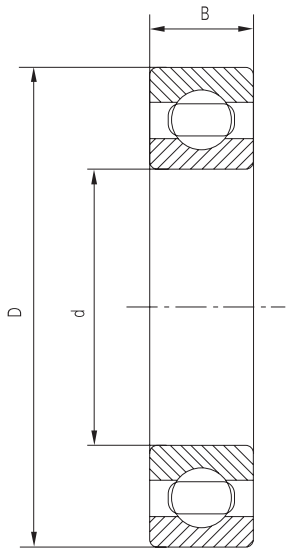

Frame	DE	NDE	d	D	B
HE2-80	6204ZZ	6204ZZ	20	47	14
HE2-90	6205ZZ	6205ZZ	25	52	15
HE2-100	6206ZZ	6206ZZ	30	62	16
HE2-110	6306ZZ	6306ZZ	30	72	19
HE2-132	6308ZZ	6308ZZ	40	90	23
HE2-160	6309	6309	45	100	25
HE2-180	6311	6311	55	120	29
HE2-200	6312	6312	60	130	31
HE2-225	6313	6313	65	140	33
HE2-250	6314	6314	70	150	35
HE2-250(V1)	6314	6314	70	150	35
HE2-280 2P	6314	6314	70	150	35
HE2-280 2P(V1)	6314	6314	70	150	35
HE2-280 4-6P	6317	6317	85	180	41
HE2-280 4-6P(V1)	6317	7317	85	180	41
HE2-315 2P	6316	6316	80	170	39
HE2-315 2P(V1)	6316	7316	80	170	39
HE2-315 4-6P	6319	6319	95	200	45
HE2-315 4-6P(V1)	6319	7319	95	200	45
HE2-355(2P)(B3,B35)	6319	6319	95	200	45
HE2-355(2P)V1	6319	7319	95	200	45
HE2-355(4-6P)(B3,B35)	6322	6322	110	240	50
HE2-355(4-6P)V1	6322	7322	110	240	50
HE2-35512(2P)(B3,B35)	319/C3	319/C3	95	200	45
HE2-35512(4-6P)(B3,B35)	Nu324	6324	120	260	55
HE2-35512(2P)V1	319C3	7319	95	200	45
HE2-35512(4-6P)V1	Nu324	7324	110	260	55

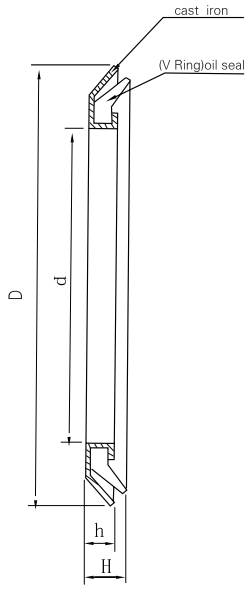

Motor type	Oil seal size	d	D	h	H
HE2-80	RB20 × 35 × 4.0	Ø20	Ø35	3.0	6.0
HE2-90	RB25 × 40 × 4.0	Ø25	Ø40	3.0	6.0
HE2-100	RB30 × 47 × 4.5	Ø30	Ø47	3.5	6.5
HE2-112	RB30 × 47 × 4.5	Ø30	Ø47	3.5	6.5
HE2-132	RB40 × 57 × 4.5	Ø40	Ø57	3.5	6.5
HE2-160	RB45 × 62 × 4.5	Ø45	Ø62	3.5	6.5
HE2-180	RB55 × 75 × 5.5	Ø55	Ø75	4.5	6.5
HE2-200	RB60 × 80 × 5.5	Ø60	Ø80	4.5	6.5
HE2-225	RB65 × 85 × 5.5	Ø65	Ø85	4.5	8.0
HE2-250	RB70 × 90 × 5.5	Ø70	Ø90	4.5	8.0
HE2-280-2	RB70 × 90 × 5.5	Ø70	Ø90	4.5	8.0
HE2-280-4.6	RB85 × 105 × 5.5	Ø85	Ø105	4.5	8.0
HE2-315-2	RB80 × 100 × 5.5	Ø80	Ø100	4.5	8.0
HE2-315-4.6	RB95 × 115 × 5.5	Ø95	Ø115	4.5	8.0
HE2-355-2	B95 × 120 × 12	Ø95	Ø120	-	12
HE2-355-4.6	B110 × 140 × 12	Ø110	Ø140	-	12
HE2-35512(2P)	B95 × 120 × 12	Ø95	Ø120	-	12
HE2-35512(4-6P)	B120 × 150 × 12	Ø120	Ø150	-	12

NOTES

NOTES

HASCON

ELECTRIC MOTOR

TN METALWORKS CO.,LTD.

92/1 moo 7 Omnoi Kratumban Samutsakorn 74130 Thailand

Hotline : 089 914 6336

Tel : 02 115 5000 #1031 – 1040 Fax : 02 115 5555, 02 813 8866

Line

Facebook

www.tngroup.co.th

transmission@tnmetalworks.com