KRUGER

KC Series

IE1/IE2/IE3/IE4

Three Phase AC Induction motor



KRUGER



Why KRUGER ?

KRUGER has been a leading innovator and manufacturer of residential, commercial and industrial fan application solutions across Asia since 1985. Today with a direct presence in over 18 regions throughout Asia; world class R&D and manufacturing facilities; KRUGER are able to offer their customers unparalleled service and support at a local level. Our customers place their trust in KRUGER.

Why use a KRUGER
KC Motor Series?



The KRUGER KC Series motors are premium-grade three-phase TEFC squirrel-cage induction motors designed for high reliability, robust performance, and global compliance.

With efficiency classes ranging from IE1 to IE4, the KC Series delivers optimal operating efficiency for HVAC, industrial, and general-purpose applications.

Developed through extensive benchmarking against leading global motor brands, the KC Series combines high electrical performance, superior mechanical durability, and flexible customization options.

Efficiency Class	Target Application	Benefit
IE1 – Standard	Cost-sensitive segments	Basic energy performance
IE2 – High Efficiency	General industries	Lower lifecycle cost
IE3 – Premium Efficiency	Global industrial standard	Best balance of cost & efficiency
IE4 – Super-Premium Efficiency	Energy-critical industries, AHU, pumps	Ultra-low loss, reduces power bills significantly

Specifications

Description	Standard Specifications	Option
Type of Motor	Squirrel cage induction motor	-
Design standard	IEC 60034, IEC 60038, IEC 60032	NEMA MG-1
Efficiency	IE1 - IE4	Efficiency, Premuim efficiency
Frame size	71 - 355	143T - 500T
Enclosure	IP55	IP56, IP65
Voltage and Frequency	For 2.2kW and below: 220-240V (Delta) / 380-415V (Star), 50Hz For 3.0kW and above: 380-415V (Delta) / 660-720 (Star), 50Hz	Other voltages/frequency such as 200V, 346V, 440V, 460V & 60Hz etc. can be supplied on request
Power source conditions	± 5% of Rated voltage	-
Time duty	Continuous duty (S1)	Short-time duty (S2) and other
Service factor (SF)	1.0	1.15 and other
Method of starting	Full voltage direct on line starting or star-delta starting	Inverter duty application
Direction of rotation	Standard motors are suitable for operation in either direction of rotation. Direction of rotation of motor can be reversed by interchanging any two phases	-
Insulation and Temperature rise Environmental conditions	Class F insulation and Class B temperature rise for Normal operating temperature motor - Ambient temperature: -20°C to 40°C - Place: Shadow, Non-harzadous - Relative humidity: Less than 90%RH (non- condensation) - Altitude: Less than 1000 meters	Class H insulation and Class B temperature rise for Smoke extraction motor Designed and tested in accordance with EN 12101-3 standards - Ff250: 250°C for 120 minutes - Ff300, 300°C for 120 minutes - F400, 400°C for 120 minutes
Lubrication	Class F : Lithium-base grease	Class H : Heat resistance silicon thickened grease
Rotor winding	Squirrel cage, aluminium conductor with end-ring and wafter blades integrally cast	-
Cooling method	IC411, Totally-enclosed fan-cooled (TEFC)	IC410: Totally Enclosed Non-Ventilated (TENV) IC418: Totally Enclosed Air Over (TEAO)
Mounting	Foot Mount (B3)	Flange Mount (B5), Foot & Flange Mount (B35), Face Mount (B14)
Shaft	Carbon steel, round shaft with key	-
Bearing	-Motors of frame size 160 and below are fitted with life - lubricated bearings -Motors of frame size 180 and above are fitted with open bearings and regreasing device	-
Painting	Phenolic rust-proof base plus lacquer surface finish	-
Terminal box position	Top	Right or Left hand side
Nameplate	Aluminium or stainless steel	-

Note: The motor is designed with a Class F insulation system (155°C) and a Class B temperature rise limit (130°C), providing an additional 25°C thermal margin. This thermal reserve enables IE1 to IE4 motors to operate reliably and continuously at ambient temperatures of up to 50°C.

Motors can be customized in accordance to customer's requirements:

1. RTD temperature sensor
2. PTC thermister
3. Anti-condensation heater
4. Corrosion-proof
5. Special paint finished
6. Special volt/Hz
7. Extend lead wire
8. Special shaft extension
9. Double ended shaft
10. Grease relief for frames down to 100L
11. Sun canopy
12. Brake motor

IE1 PERFORMANCE DATA:

2 Pole / 50Hz

Model	Rated Power		Frame size	Rated Current (A) (I_{FL})			Rated speed	Rated torque (T_{FL})	Power Factor	Efficiency Full load	Starting Current	Starting Torque	Maximum Torque	Weight	Moment of inertia (kgm^2)
	Kw	HP		At 380V	At 400V	At 415V	RPM	N.M	(cosΦ)	%	I_{ST} / I_{FL}	T_{ST} / T_{FL}	T_M / T_{FL}	(kg)	
Y2711A-2	0.25	0.34	71	0.82	0.78	0.75	2650	0.9	0.80	58.2	5.5	2.2	2.2	5	0.0002
Y2-711-2	0.37	0.50	71	1.09	1.03	0.99	2750	1.3	0.81	63.9	6.1	2.2	2.2	8.5	0.0004
Y2-712-2	0.55	0.75	71	1.48	1.40	1.35	2790	1.9	0.82	69.0	6.1	2.2	2.3	9	0.0006
Y2-801-2	0.75	1.0	80	1.90	1.81	1.74	2845	2.5	0.83	72.1	6.1	2.2	2.3	14.5	0.0010
Y2-802-2	1.1	1.5	80	2.65	2.52	2.43	2840	3.7	0.84	75.0	7.0	2.2	2.3	16	0.0011
Y2-90S-2	1.5	2.0	90S	3.51	3.34	3.22	2840	5.0	0.84	77.2	7.0	2.2	2.3	18.5	0.0023
Y2-90L-2	2.2	3.0	90L	4.93	4.69	4.52	2840	7.4	0.85	79.7	7.0	2.2	2.3	20.5	0.0030
Y2-100L-2	3.0	4.0	100L	6.43	6.11	5.89	2830	10.1	0.87	81.5	7.5	2.2	2.3	29	0.0060
Y2-112M-2	4.0	5.5	112M	8.31	7.90	7.61	2890	13.2	0.88	83.1	7.5	2.2	2.3	36	0.0075
Y2-132S1-2	5.5	7.5	132S	11.2	10.7	10.3	2910	18.0	0.88	84.7	7.5	2.2	2.3	48	0.0170
Y2-132S2-2	7.5	10.0	132S	15.1	14.3	13.8	2910	24.6	0.88	86.0	7.5	2.2	2.3	55	0.0180
Y2-160M1-2	11.0	15.0	160M	21.7	20.6	19.9	2935	35.8	0.88	87.6	7.5	2.2	2.3	96	0.0600
Y2-160M2-2	15.0	20.0	160M	29.2	27.7	26.7	2935	48.8	0.88	88.7	7.5	2.2	2.3	105	0.0670
Y2-160L-2	18.5	25	160L	35.4	33.6	32.4	2935	60.2	0.89	89.3	7.5	2.2	2.3	120	0.0780
Y2-180M-2	22	30	180M	41.8	39.7	38.3	2940	71.5	0.89	89.9	7.5	2.0	2.3	144	0.1180
Y2-200L1-2	30	40	200L	56.5	53.6	51.7	2945	97.3	0.89	90.7	7.5	2.0	2.3	207	0.2050
Y2-200L2-2	37	50	200L	69.3	65.8	63.4	2945	120	0.89	91.2	7.5	2.0	2.3	219	0.2300
Y2-225M-2	45	60	225M	83.8	79.6	76.7	2965	145	0.89	91.7	7.5	2.0	2.3	280	0.3100
Y2-250M-2	55	75	250M	102	96.9	93.4	2965	177	0.89	92.1	7.5	2.0	2.3	366	0.4920
Y2-280S-2	75	100	280S	138	131	126	2965	242	0.89	92.7	7.5	2.0	2.3	485	0.6950
Y2-280M-2	90	125	280M	162	154	148	2965	290	0.91	93.0	7.5	2.0	2.3	558	0.8520
Y2-315S-2	110	150	315S	197	187	180	2975	353	0.91	93.3	7.1	1.8	2.2	875	1.7530
Y2-315M-2	132	180	315M	236	224	216	2975	424	0.91	93.5	7.1	1.8	2.2	950	1.8740
Y2-315L1-2	160	215	315L	282	268	258	2975	514	0.92	93.8	7.1	1.8	2.2	1010	2.2960
Y2-315L2-2	200	270	315L	351	334	322	2975	642	0.92	94.0	7.1	1.8	2.2	1080	2.4780
Y2-355M-2	250	340	355M	444	422	407	2980	801	0.91	94.0	7.1	1.6	2.2	1500	3.3210
Y2-355L1-2	315	430	355L	560	532	512	2980	1009	0.91	94.0	7.2	1.6	2.2	1670	3.9850
Y2-355L2-2	355	480	355L	631	599	577	2980	1138	0.91	94.0	7.2	1.6	2.2	1800	4.6490
Y2-3552-2	375	506	355L	666	633	610	2980	1202	0.91	94.0	7.2	1.6	2.2	1950	4.9450

IE1 PERFORMANCE DATA:

4 Pole / 50Hz

Model	Rated Power		Frame size	Rated Current (A) (I_{FL})			Rated speed	Rated torque (T_{FL})	Power Factor	Efficiency Full load	Starting Current	Starting Torque	Maximum Torque	Weight	Moment of inertia (kgm^2)
	Kw	HP		At 380V	At 400V	At 415V	RPM	N.M	(cosΦ)	%	I_{ST} / I_{FL}	T_{ST} / T_{FL}	T_M / T_{FL}	(kg)	
Y2711A-2	0.25	0.34	71	0.83	0.79	0.76	1350	1.8	0.74	61.5	5.2	2.1	2.2	8.7	0.0007
Y2-711-2	0.37	0.50	71	1.14	1.08	1.04	1340	2.6	0.75	66.0	5.2	2.1	2.2	9.4	0.0008
Y2-712-2	0.55	0.75	80	1.59	1.51	1.46	1390	3.8	0.75	70.0	5.2	2.4	2.3	13.9	0.0016
Y2-801-2	0.75	1.0	80	2.08	1.98	1.90	1380	5.2	0.76	72.1	6.0	2.3	2.3	15.3	0.0019
Y2-802-2	1.1	1.5	80	2.93	2.79	2.68	1390	7.6	0.76	75.0	6.0	2.3	2.3	18.3	0.0029
Y2-90S-2	1.5	2.0	90S	3.78	3.60	3.47	1390	10.3	0.78	77.2	6.0	2.3	2.3	21.6	0.0034
Y2-90L-2	2.2	3.0	100L	5.24	4.98	4.80	1410	14.9	0.80	79.7	7.0	2.3	2.3	28	0.0085
Y2-100L-2	3.0	4.0	100L	6.90	6.56	6.32	1410	20.3	0.81	81.5	7.0	2.3	2.3	32	0.0133
Y2-112M-2	4.0	5.5	112M	8.92	8.47	8.17	1440	26.5	0.82	83.1	7.0	2.3	2.3	39	0.0140
Y2-132S1-2	5.5	7.5	132S	12.0	11.4	11.0	1445	36.3	0.82	84.7	7.0	2.3	2.3	53	0.0320
Y2-132S2-2	7.5	10.0	132S	15.8	15.0	14.4	1445	49.6	0.84	86.0	7.0	2.3	2.3	64	0.0400
Y2-160M1-2	11.0	15.0	160M	22.7	21.6	20.8	1460	71.9	0.84	87.6	7.0	2.2	2.3	101	0.1010
Y2-160M2-2	15.0	20.0	160L	30.6	29.1	28.0	1460	98.1	0.84	88.7	7.5	2.2	2.3	112	0.1270
Y2-160L-2	18.5	25	180M	36.6	34.8	33.5	1470	120.2	0.86	89.3	7.5	2.2	2.3	141	0.1700
Y2-180M-2	22	30	180L	43.2	41.1	39.6	1470	142.9	0.86	89.9	7.5	2.2	2.3	161	0.1900
Y2-200L1-2	30	40	200L	58.4	55.5	53.5	1470	194.9	0.86	90.7	7.2	2.2	2.3	212	0.3300
Y2-200L2-2	37	50	225S	70.9	67.3	64.9	1475	240	0.87	91.2	7.2	2.2	2.3	263	0.5600
Y2-225M-2	45	60	225M	85.7	81.4	78.5	1475	291	0.87	91.7	7.2	2.2	2.3	299	0.6500
Y2-250M-2	55	75	250M	104	99.1	95.5	1475	356	0.87	92.1	7.2	2.2	2.3	383	1.0500
Y2-280S-2	75	100	280S	141	134	129	1485	482	0.87	92.7	7.2	2.2	2.3	443	1.2980
Y2-280M-2	90	125	280M	169	161	155	1485	579	0.87	93.0	7.2	2.2	2.3	512	1.8100
Y2-315S-2	110	150	315S	204	193	186	1485	707	0.88	93.3	6.9	2.1	2.2	895	2.9800
Y2-315M-2	132	180	315M	244	232	223	1485	849	0.88	93.5	6.9	2.1	2.2	990	3.4800
Y2-315L1-2	160	215	315L	291	277	267	1485	1029	0.89	93.8	6.9	2.1	2.2	1065	3.9600
Y2-315L2-2	200	270	315L	363	345	333	1485	1286	0.89	94.0	6.9	2.1	2.2	1155	4.4700
Y2-355M-2	250	340	355M	454	431	416	1490	1602	0.89	94.0	6.9	2.1	2.2	1650	7.8300
Y2-355L1-2	315	430	355L	572	543	524	1490	2019	0.89	94.0	6.9	2.1	2.2	1760	9.6100
Y2-355L2-2	355	480	355L	645	612	590	1490	2275	0.89	94.0	6.9	2.1	2.2	1890	11.0400
Y2-3552-2	375	506	355L	681	647	624	1490	2403	0.89	94.0	6.9	2.1	2.2	2000	12.3500

IE1 PERFORMANCE DATA:

6 Pole / 50Hz

Model	Rated Power		Frame size	Rated Current (A) (I_{FL})			Rated speed	Rated torque (T_{FL})	Power Factor	Efficiency Full load	Starting Current	Starting Torque	Maximum Torque	Weight	Moment of inertia (kgm^2)
	Kw	HP		At 380V	At 400V	At 415V	RPM	N.M	(cosΦ)	%	I_{ST} / I_{FL}	T_{ST} / T_{FL}	T_M / T_{FL}	(kg)	
Y2-801A-6	0.25	0.34	80	1.07	1.02	0.98	865	2.8	0.68	52.1	4.0	1.9	2.0	13	0.0012
Y2-801-6	0.37	0.50	80	1.35	1.28	1.23	885	4.0	0.70	59.7	4.7	1.9	2.0	14.4	0.0024
Y2-802-6	0.55	0.75	80	1.76	1.68	1.62	885	5.9	0.72	65.8	4.7	1.9	2.1	15.5	0.0026
Y2-90S-6	0.75	1.0	90S	2.26	2.15	2.07	915	7.8	0.72	70.0	5.5	2.0	2.1	17.5	0.0040
Y2-90L-6	1.1	1.5	90L	3.14	2.98	2.88	915	11.5	0.73	72.9	5.5	2.0	2.1	23	0.0056
Y2-100L-6	1.5	2.0	100L	4.04	3.84	3.70	910	15.7	0.75	75.2	5.5	2.0	2.1	27	0.0100
Y2-112M-6	2.2	3.0	112M	5.66	5.38	5.18	940	22.3	0.76	77.7	6.5	2.0	2.1	36	0.0160
Y2-132S-6	3.0	4.0	132S	7.53	7.15	6.89	960	29.8	0.76	79.7	6.5	2.1	2.1	48	0.0370
Y2-132M1-6	4.0	5.5	132M	9.82	9.33	9.00	960	39.8	0.76	81.4	6.5	2.1	2.1	57	0.0470
Y2-132M2-6	5.5	7.5	132M	13.1	12.4	12.0	960	54.7	0.77	83.1	6.5	2.1	2.1	66	0.0580
Y2-160M-6	7.5	10.0	160M	17.5	16.6	16.0	970	73.8	0.77	84.7	6.5	2.0	2.1	96	0.1160
Y2-160L-6	11.0	15.0	160L	24.8	23.6	22.7	970	108.3	0.78	86.4	6.5	2.0	2.1	118	0.1510
Y2-180L-6	15.0	20.0	180L	32.1	30.5	29.4	970	147.7	0.81	87.7	7.0	2.0	2.1	156	0.2670
Y2-200L1-6	18.5	25	200L	39.2	37.2	35.9	975	181.2	0.81	88.6	7.0	2.1	2.1	193	0.4200
Y2-200L2-6	22	30	200L	45.1	42.9	41.3	975	215.5	0.83	89.2	7.0	2.1	2.1	201	0.4640
Y2-225M-6	30	40	225M	60.2	57.2	55.1	980	292.3	0.84	90.2	7.0	2.0	2.1	277	0.7250
Y2-250M-6	37	50	250M	72.0	68.4	65.9	980	361	0.86	90.8	7.0	2.1	2.1	364	0.9500
Y2-280S-6	45	60	280S	87.0	82.6	79.6	980	438	0.86	91.4	7.0	2.1	2.0	424	1.9200
Y2-280M-6	55	75	280M	106	100.4	96.8	980	536	0.86	91.9	7.0	2.1	2.0	497	2.4000
Y2-315S-6	75	100	315S	143	136	131	990	723	0.86	92.6	7.0	2.0	2.0	825	3.9400
Y2-315M-6	90	125	315M	171	163	157	990	868	0.86	92.9	7.0	2.0	2.0	925	4.5800
Y2-315L1-6	110	150	315L	208	198	191	990	1061	0.86	93.3	6.7	2.0	2.0	1020	5.2300
Y2-315L2-6	132	180	315L	247	234	226	990	1273	0.87	93.5	6.7	2.0	2.0	1100	5.5400
Y2-355M1-6	160	215	355M	295	280	270	990	1543	0.88	93.8	6.7	1.9	2.0	1470	8.2750
Y2-355M2-6	200	270	355M	367	349	336	990	1929	0.88	94.0	6.7	1.9	2.0	1600	10.0600
Y2-355L1-6	250	340	355L	459	436	420	990	2411	0.88	94.0	6.7	1.9	2.0	1800	13.1900
Y2-355L2-6	315	430	355L	579	550	530	990	3038	0.88	94.0	6.7	1.8	2.0	2000	16.6190
Y2-400L1-6	355	480	400L	667	634	611	990	3424	0.86	94.0	6.7	1.6	2.0	3200	30.4200
Y2-400L2-6	375	506	400L	705	670	645	990	3617	0.86	94.0	6.7	1.6	2.0	3500	32.1300

IE1 PERFORMANCE DATA:

8 Pole / 50Hz

Model	Rated Power		Frame size	Rated Current (A) (I_{FL})			Rated speed	Rated torque (T_{FL})	Power Factor	Efficiency Full load	Starting Current	Starting Torque	Maximum Torque	Weight	Moment of inertia (kgm^2)
	Kw	HP		At 380V	At 400V	At 415V	RPM	N.M	(cosΦ)	%	I_{ST} / I_{FL}	T_{ST} / T_{FL}	T_M / T_{FL}	(kg)	
Y2-802-8	0.25	0.34	80	1.43	1.36	1.31	645	3.7	0.61	43.4	3.3	1.8	1.9	15	0.0021
Y2-90S-8	0.37	0.50	90S	1.89	1.79	1.73	670	5.3	0.60	49.7	4.0	1.8	1.9	18	0.0030
Y2-90L-8	0.55	0.75	90L	2.48	2.36	2.27	670	7.8	0.60	56.1	4.0	1.8	2.0	23	0.0040
Y2-100L1-8	0.75	1.0	100L	2.78	2.64	2.54	680	10.5	0.67	61.2	4.0	1.8	2.0	27	0.0063
Y2-100L2-8	1.1	1.5	100L	3.64	3.46	3.34	680	15.4	0.69	66.5	5.0	1.8	2.0	29	0.0097
Y2-112M-8	1.5	2.0	112M	4.71	4.47	4.31	700	20.5	0.69	70.2	5.0	1.8	2.0	36	0.0160
Y2-132S-8	2.2	3.0	132S	6.34	6.03	5.81	710	29.6	0.71	74.2	6.0	1.8	2.0	47	0.0370
Y2-132M-8	3.0	4.0	132M	8.11	7.70	7.43	710	40.3	0.73	77.0	6.0	1.8	2.0	57	0.0480
Y2-160M1-8	4.0	5.5	160M	10.51	9.99	9.63	720	53.1	0.73	79.2	6.0	1.9	2.0	84	0.0960
Y2-160M2-8	5.5	7.5	160M	13.9	13.2	12.7	720	72.9	0.74	81.4	6.0	2.0	2.0	96	0.1180
Y2-160L-8	7.5	10.0	160L	18.3	17.4	16.7	720	99.5	0.75	83.1	6.0	2.0	2.0	118	0.1510
Y2-180L-8	11.0	15.0	180L	25.9	24.6	23.7	730	143.9	0.76	85.0	6.6	2.0	2.0	156	0.2660
Y2-200L-8	15.0	20.0	200L	34.8	33.0	31.9	730	196.2	0.76	86.2	6.6	2.0	2.0	210	0.4460
Y2-225S-8	18.5	25	225S	42.6	40.4	39.0	730	242.0	0.76	86.9	6.6	1.9	2.0	256	0.6340
Y2-225M-8	22	30	225M	49.0	46.6	44.9	730	287.8	0.78	87.4	6.6	1.9	2.0	280	0.7750
Y2-250M-8	30	40	250M	65.3	62.1	59.8	730	392.4	0.79	88.3	6.6	1.9	2.0	392	0.8090
Y2-280S-8	37	50	280S	80.1	76.1	73.4	735	481	0.79	88.8	6.6	1.9	2.0	451	1.3810
Y2-280M-8	45	60	280M	97.0	92.2	88.8	735	585	0.79	89.2	6.6	1.9	2.0	511	1.7210
Y2-315S-8	55	75	315S	115	109.3	105.3	735	715	0.81	89.7	6.6	1.8	2.0	810	4.5900
Y2-315M-8	75	100	315M	156	148	143	735	974	0.81	90.3	6.6	1.8	2.0	970	5.3600
Y2-315L1-8	90	125	315L	184	175	168	735	1169	0.82	90.7	6.6	1.8	2.0	1070	6.1100
Y2-315L2-8	110	150	315L	224	213	205	735	1429	0.82	91.1	6.4	1.8	2.0	1160	6.5500
Y2-355M1-8	132	180	355M	267	254	245	735	1715	0.82	91.5	6.4	1.8	2.0	1520	11.1400
Y2-355M2-8	160	215	355M	319	303	292	735	2079	0.83	91.9	6.4	1.8	2.0	1620	13.1200
Y2-355L1-8	200	270	355L	396	376	362	735	2598	0.83	92.5	6.4	1.8	2.0	1800	16.0900
Y2-355L2-8	250	340	355L	495	470	453	735	3248	0.83	92.5	6.4	1.8	2.0	2000	20.1100
Y2-400L1-8	315	430	400L	623	592	571	735	4092	0.83	92.5	6.4	1.6	2.0	3100	40.1000
Y2-400L2-8	355	480	400L	703	667	643	735	4612	0.83	92.5	6.4	1.6	2.0	3150	47.3800
Y2-400L3-8	375	506	400L	742	705	680	735	4872	0.83	92.5	6.4	1.6	2.0	3200	52.1200

IE2 PERFORMANCE DATA:

2 Pole / 50 Hz

Model	Rated Power		Frame size	Rated Current (A) (I_{FL})			Rated speed	Rated torque (T_{FL})	Power Factor	Efficiency Full load	Starting Current	Starting Torque	Maximum Torque	Weight	Moment of inertia (kgm^2)
	Kw	HP		At 380V	At 400V	At 415V	RPM	N.M	(cosΦ)	%	I_{ST} / I_{FL}	T_{ST} / T_{FL}	T_M / T_{FL}	(kg)	
YE2-71A-2	0.25	0.34	71	0.72	0.69	0.66	2700	0.9	0.81	64.8	6.1	2.2	2.2	6	0.0010
YE2-711-2	0.37	0.50	71	1.00	0.95	0.91	2700	1.3	0.81	69.5	6.1	2.2	2.2	8.5	0.0004
YE2-712-2	0.55	0.75	71	1.38	1.31	1.26	2700	1.9	0.82	74.1	6.1	2.2	2.3	9	0.0006
YE2-801-2	0.75	1.0	80	1.77	1.69	1.62	2730	2.6	0.83	77.4	6.1	2.2	2.3	14.5	0.0010
YE2-802-2	1.1	1.5	80	2.50	2.37	2.29	2790	3.8	0.84	79.6	7.0	2.2	2.3	16	0.0011
YE2-90S-2	1.5	2.0	90S	3.34	3.17	3.06	2840	5.0	0.84	81.3	7.0	2.2	2.3	18.5	0.0023
YE2-90L-2	2.2	3.0	90L	4.73	4.49	4.33	2840	7.4	0.85	83.2	7.0	2.2	2.3	20.5	0.0030
YE2-100L-2	3.0	4.0	100L	6.19	5.88	5.67	2880	9.9	0.87	84.6	7.5	2.2	2.3	29	0.0060
YE2-112M-2	4.0	5.5	112M	8.05	7.65	7.37	2890	13.2	0.88	85.8	7.5	2.2	2.3	36	0.0075
YE2-132S1-2	5.5	7.5	132S	10.9	10.4	10.0	2910	18.0	0.88	87.0	7.5	2.2	2.3	48	0.0170
YE2-132S2-2	7.5	10.0	132S	14.7	14.0	13.5	2910	24.6	0.88	88.1	7.5	2.2	2.3	55	0.0180
YE2-160M1-2	11.0	15.0	160M	21.2	20.2	19.5	2935	35.8	0.88	89.4	7.5	2.2	2.3	96	0.0600
YE2-160M2-2	15.0	20.0	160M	28.7	27.2	26.3	2935	48.8	0.88	90.3	7.5	2.2	2.3	105	0.0670
YE2-160L-2	18.5	25	160L	34.7	33.0	31.8	2935	60.2	0.89	90.9	7.5	2.2	2.3	120	0.0780
YE2-180M-2	22	30	180M	41.1	39.1	37.7	2940	71.5	0.89	91.3	7.5	2.0	2.3	144	0.1180
YE2-200L1-2	30	40	200L	55.7	52.9	51.0	2945	97.3	0.89	92.0	7.5	2.0	2.3	207	0.2050
YE2-200L2-2	37	50	200L	68.3	64.9	62.5	2945	120	0.89	92.5	7.5	2.0	2.3	219	0.2300
YE2-225M-2	45	60	225M	82.7	78.6	75.7	2965	145	0.89	92.9	7.5	2.0	2.3	280	0.3100
YE2-250M-2	55	75	250M	101	95.7	92.2	2965	177	0.89	93.2	7.5	2.0	2.3	366	0.4920
YE2-280S-2	75	100	280S	137	130	125	2965	242	0.89	93.8	7.5	2.0	2.3	485	0.6950
YE2-280M-2	90	125	280M	160	152	146	2965	290	0.91	94.1	7.5	2.0	2.3	558	0.8520
YE2-315S-2	110	150	315S	195	185	178	2975	353	0.91	94.3	7.1	1.8	2.2	875	1.7530
YE2-315M-2	132	180	315M	233	221	213	2975	424	0.91	94.6	7.1	1.8	2.2	950	1.8740
YE2-315L1-2	160	215	315L	279	265	255	2975	514	0.92	94.8	7.1	1.8	2.2	1010	2.2960
YE2-315L2-2	200	270	315L	348	330	318	2975	642	0.92	95.0	7.1	1.8	2.2	1080	2.4780
YE2-355M-2	250	340	355M	439	417	402	2980	801	0.91	95.0	7.1	1.6	2.2	1550	3.3210
YE2-355L1-2	315	430	355L	554	526	507	2980	1009	0.91	95.0	7.2	1.6	2.2	1720	3.9850
YE2-355L2-2	355	480	355L	624	593	571	2980	1138	0.91	95.0	7.2	1.6	2.2	1850	4.6490
YE2-3552-2	375	506	355L	659	626	603	2980	1202	0.91	95.0	7.2	1.6	2.2	2000	4.9110

IE2 PERFORMANCE DATA:

4 Pole / 50Hz

Model	Rated Power		Frame size	Rated Current (A) (I_{FL})			Rated speed	Rated torque (T_{FL})	Power Factor	Efficiency Full load	Starting Current	Starting Torque	Maximum Torque	Weight	Moment of inertia (kgm^2)
	Kw	HP		At 380V	At 400V	At 415V	RPM	N.M	(cosΦ)	%	I_{ST} / I_{FL}	T_{ST} / T_{FL}	T_M / T_{FL}	(kg)	
YE2-711-4	0.25	0.33	71	0.75	0.71	0.69	1340	1.8	0.74	68.5	5.2	2.1	2.2	8.7	0.0007
YE2-712-4	0.37	0.50	71	1.03	0.98	0.94	1340	2.6	0.75	72.7	5.2	2.1	2.2	9.4	0.0008
YE2-801-4	0.55	0.75	80	1.45	1.37	1.32	1390	3.8	0.75	77.1	5.2	2.4	2.3	13.9	0.0016
YE2-802-4	0.75	1.0	80	1.88	1.79	1.72	1380	5.2	0.76	79.6	6.0	2.3	2.3	15.3	0.0019
YE2-90S-4	1.1	1.5	90S	2.70	2.57	2.47	1390	7.6	0.76	81.4	6.0	2.3	2.3	18.3	0.0029
YE2-90L-4	1.5	2.0	90L	3.53	3.35	3.23	1390	10.3	0.78	82.8	6.0	2.3	2.3	21.6	0.0034
YE2-100L1-4	2.2	3.0	100L	4.96	4.71	4.54	1410	14.9	0.80	84.3	7.0	2.3	2.3	28	0.0085
YE2-100L2-4	3.0	4.0	100L	6.58	6.25	6.03	1410	20.3	0.81	85.5	7.0	2.3	2.3	32	0.0133
YE2-112M-4	4.0	5.5	112M	8.56	8.13	7.84	1440	26.5	0.82	86.6	7.0	2.3	2.3	39	0.0140
YE2-132S-4	5.5	7.5	132S	11.6	11.0	10.6	1445	36.3	0.82	87.7	7.0	2.3	2.3	53	0.0320
YE2-132M-4	7.5	10.0	132S	15.3	14.5	14.0	1445	49.6	0.84	88.7	7.0	2.3	2.3	64	0.0400
YE2-160M-4	11.0	15.0	160M	22.2	21.0	20.3	1460	71.9	0.84	89.8	7.0	2.2	2.3	101	0.1010
YE2-160L-4	15.0	20.0	160L	29.9	28.4	27.4	1460	98.1	0.84	90.6	7.5	2.2	2.3	112	0.1270
YE2-180M-4	18.5	25	180M	35.8	34.0	32.8	1470	120.2	0.86	91.2	7.5	2.2	2.3	141	0.1700
YE2-180L-4	22	30	180L	42.4	40.3	38.9	1470	142.9	0.86	91.6	7.5	2.2	2.3	161	0.1900
YE2-200L-4	30	40	200L	57.4	54.6	52.6	1470	194.9	0.86	92.3	7.2	2.2	2.3	212	0.3300
YE2-225S-4	37	50	225S	69.7	66.2	63.8	1475	240	0.87	92.7	7.2	2.2	2.3	263	0.5600
YE2-225M-4	45	60	225M	84.4	80.2	77.3	1475	291	0.87	93.1	7.2	2.2	2.3	299	0.6500
YE2-250M-4	55	75	250M	103	97.6	94.1	1475	356	0.87	93.5	7.2	2.2	2.3	383	1.0500
YE2-280S-4	75	100	280S	139	132	128	1485	482	0.87	94.0	7.2	2.2	2.3	443	1.2980
YE2-280M-4	90	125	280M	167	159	153	1485	579	0.87	94.2	7.2	2.2	2.3	512	1.8100
YE2-315S-4	110	150	315S	201	191	184	1485	707	0.88	94.5	6.9	2.1	2.2	895	2.9800
YE2-315M-4	132	180	315M	241	229	220	1485	849	0.88	94.7	6.9	2.1	2.2	990	3.4800
YE2-315L1-4	160	215	315L	288	273	264	1485	1029	0.89	94.9	6.9	2.1	2.2	1065	3.9600
YE2-315L2-4	200	270	315L	359	341	329	1485	1286	0.89	95.1	6.9	2.1	2.2	1155	4.4700
YE2-355M-4	250	340	355M	449	426	411	1490	1602	0.89	95.1	6.9	2.1	2.2	1650	7.8300
YE2-355L1-4	315	430	355L	565	537	518	1490	2019	0.89	95.1	6.9	2.1	2.2	1760	9.6100
Y2-355L2-4	355	480	355L	637	605	584	1490	2275	0.89	95.1	6.9	2.1	2.2	1890	11.0400
Y2-3552-4	375	506	355L	673	640	616	1490	2403	0.89	95.1	6.9	2.1	2.2	2050	12.3500

IE2 PERFORMANCE DATA:

6 Pole / 50Hz

Model	Rated Power		Frame size	Rated Current (A) (I_{FL})			Rated speed	Rated torque (T_{FL})	Power Factor	Efficiency Full load	Starting Current	Starting Torque	Maximum Torque	Weight	Moment of inertia (kgm^2)
	Kw	HP		At 380V	At 400V	At 415V	RPM	N.M	(cosΦ)	%	I_{ST} / I_{FL}	T_{ST} / T_{FL}	T_M / T_{FL}	(kg)	
YE2-801A-6	0.25	0.33	80	0.89	0.84	0.81	865	2.8	0.68	63.0	4.0	1.9	2.0	13	0.0012
YE2-801-6	0.37	0.50	80	1.18	1.12	1.08	885	4.0	0.70	68.0	4.7	1.9	2.0	14.4	0.0024
YE2-802-6	0.55	0.75	80	1.63	1.55	1.50	885	5.9	0.72	71.0	4.7	1.9	2.1	15.5	0.0026
YE2-90S-6	0.75	1.0	90S	2.09	1.98	1.91	915	7.8	0.72	75.9	5.5	2.0	2.1	17.5	0.0040
YE2-90L-6	1.1	1.5	90L	2.93	2.78	2.68	915	11.5	0.73	78.1	5.5	2.0	2.1	23	0.0056
YE2-100L-6	1.5	2.0	100L	3.81	3.62	3.49	910	15.7	0.75	79.8	5.5	2.0	2.1	27	0.0100
YE2-112M-6	2.2	3.0	112M	5.38	5.11	4.92	940	22.3	0.76	81.8	6.5	2.0	2.1	36	0.0160
YE2-132S-6	3.0	4.0	132S	7.20	6.84	6.59	960	29.8	0.76	83.3	6.5	2.1	2.1	48	0.0370
YE2-132M1-6	4.0	5.5	132M	9.45	8.98	8.66	960	39.8	0.76	84.6	6.5	2.1	2.1	57	0.0470
YE2-132M2-6	5.5	7.5	132M	12.6	12.0	11.6	960	54.7	0.77	86.0	6.5	2.1	2.1	66	0.0580
YE2-160M-6	7.5	10.0	160M	17.0	16.1	15.5	970	73.8	0.77	87.2	6.5	2.0	2.1	96	0.1160
YE2-160L-6	11.0	15.0	160L	24.2	22.9	22.1	970	108.3	0.78	88.7	6.5	2.0	2.1	118	0.1510
YE2-180L-6	15.0	20.0	180L	31.4	29.8	28.7	970	147.7	0.81	89.7	7.0	2.0	2.1	156	0.2670
YE2-200L1-6	18.5	25	200L	38.4	36.5	35.1	975	181.2	0.81	90.4	7.0	2.1	2.1	193	0.4200
YE2-200L2-6	22	30	200L	44.3	42.1	40.6	975	215.5	0.83	90.9	7.0	2.1	2.1	201	0.4640
YE2-225M-6	30	40	225M	59.2	56.2	54.2	980	292.3	0.84	91.7	7.0	2.0	2.1	277	0.7250
YE2-250M-6	37	50	250M	70.9	67.4	64.9	980	361	0.86	92.2	7.0	2.1	2.1	364	0.9500
YE2-280S-6	45	60	280S	85.8	81.5	78.5	980	438	0.86	92.7	7.0	2.1	2.0	424	1.9200
YE2-280M-6	55	75	280M	104	99.2	95.6	980	536	0.86	93.1	7.0	2.1	2.0	497	2.4000
YE2-315S-6	75	100	315S	141	134	129	990	723	0.86	93.7	7.0	2.0	2.0	825	3.9400
YE2-315M-6	90	125	315M	169	161	155	990	868	0.86	94.0	7.0	2.0	2.0	925	4.5800
YE2-315L1-6	110	150	315L	206	196	189	990	1061	0.86	94.3	6.7	2.0	2.0	1020	5.2300
YE2-315L2-6	132	180	315L	244	232	223	990	1273	0.87	94.6	6.7	2.0	2.0	1100	5.5400
YE2-355M1-6	160	215	355M	291	277	267	990	1543	0.88	94.8	6.7	1.9	2.0	1470	8.2750
YE2-355M2-6	200	270	355M	363	345	333	990	1929	0.88	95.0	6.7	1.9	2.0	1600	10.0600
YE2-355L1-6	250	340	355L	454	432	416	990	2411	0.88	95.0	6.7	1.9	2.0	1800	13.1900
YE2-355L2-6	315	430	355L	572	544	524	990	3038	0.88	95.0	6.7	1.8	2.0	2000	16.6190
YE2-400L1-6	355	480	400L	660	627	605	990	3424	0.86	95.0	6.7	1.6	2.0	3200	30.4200
YE2-400L2-6	375	506	400L	697	663	639	990	3617	0.86	95.0	6.7	1.6	2.0	3500	32.1300

IE2 PERFORMANCE DATA:

8 Pole / 50Hz

Model	Rated Power		Frame size	Rated Current (A) (I_{FL})			Rated speed	Rated torque (T_{FL})	Power Factor	Efficiency Full load	Starting Current	Starting Torque	Maximum Torque	Weight	Moment of inertia (kgm^2)
	Kw	HP		At 380V	At 400V	At 415V	RPM	N.M	(cosΦ)	%	I_{ST} / I_{FL}	T_{ST} / T_{FL}	T_M / T_{FL}	(kg)	
YE2-802-8	0.25	0.33	80	1.23	1.17	1.13	645	3.7	0.61	50.6	3.3	1.8	1.9	15	0.0021
YE2-90S-8	0.37	0.50	90S	1.67	1.59	1.53	670	5.3	0.60	56.1	4.0	1.8	1.9	18	0.0030
YE2-90L-8	0.55	0.75	90L	2.26	2.14	2.07	670	7.8	0.60	61.7	4.0	1.8	2.0	23	0.0040
YE2-100L1-8	0.75	1.0	100L	2.57	2.44	2.35	680	10.5	0.67	66.2	4.0	1.8	2.0	27	0.0063
YE2-100L2-8	1.1	1.5	100L	3.42	3.25	3.13	680	15.4	0.69	70.8	5.0	1.8	2.0	29	0.0097
YE2-112M-8	1.5	2.0	112M	4.46	4.23	4.08	700	20.5	0.69	74.1	5.0	1.8	2.0	36	0.0160
YE2-132S-8	2.2	3.0	132S	6.07	5.76	5.56	710	29.6	0.71	77.6	6.0	1.8	2.0	47	0.0370
YE2-132M-8	3.0	4.0	132M	7.81	7.41	7.15	710	40.3	0.73	80.0	6.0	1.8	2.0	57	0.0480
YE2-160M1-8	4.0	5.5	160M	10.17	9.66	9.31	720	53.1	0.73	81.9	6.0	1.9	2.0	84	0.0960
YE2-160M2-8	5.5	7.5	160M	13.5	12.8	12.3	720	72.9	0.74	83.8	6.0	2.0	2.0	96	0.1180
YE2-160L-8	7.5	10.0	160L	17.8	16.9	16.3	720	99.5	0.75	85.3	6.0	2.0	2.0	118	0.1510
YE2-180L-8	11.0	15.0	180L	25.3	24.0	23.2	730	143.9	0.76	86.9	6.6	2.0	2.0	156	0.2660
YE2-200L-8	15.0	20.0	200L	34.1	32.4	31.2	730	196.2	0.76	88.0	6.6	2.0	2.0	210	0.4460
YE2-225S-8	18.5	25	225S	41.7	39.7	38.2	730	242.0	0.76	88.6	6.6	1.9	2.0	256	0.6340
YE2-225M-8	22	30	225M	48.1	45.7	44.0	730	287.8	0.78	89.1	6.6	1.9	2.0	280	0.7750
YE2-250M-8	30	40	250M	64.3	61.0	58.8	730	392.4	0.79	89.8	6.6	1.9	2.0	392	0.8090
YE2-280S-8	37	50	280S	78.8	74.9	72.2	735	481	0.79	90.3	6.6	1.9	2.0	451	1.3810
YE2-280M-8	45	60	280M	95.4	90.7	87.4	735	585	0.79	90.7	6.6	1.9	2.0	511	1.7210
YE2-315S-8	55	75	315S	113	107.7	103.8	735	715	0.81	91.0	6.6	1.8	2.0	810	4.5900
YE2-315M-8	75	100	315M	154	146	141	735	974	0.81	91.6	6.6	1.8	2.0	970	5.3600
YE2-315L1-8	90	125	315L	181	172	166	735	1169	0.82	91.9	6.6	1.8	2.0	1070	6.1100
YE2-315L2-8	110	150	315L	221	210	202	735	1429	0.82	92.3	6.4	1.8	2.0	1160	6.5500
YE2-355M1-8	132	180	355M	264	251	242	735	1715	0.82	92.6	6.4	1.8	2.0	1520	11.1400
YE2-355M2-8	160	215	355M	315	299	288	735	2079	0.83	93.0	6.4	1.8	2.0	1620	13.1200
YE2-355L1-8	200	270	355L	392	372	359	735	2598	0.83	93.5	6.4	1.8	2.0	1800	16.0900
YE2-355L2-8	250	340	355L	489	465	448	735	3248	0.83	93.5	6.4	1.8	2.0	2000	20.1100
YE2-400L1-8	315	430	400L	617	586	565	735	4092	0.83	93.5	6.4	1.6	2.0	3100	40.1000
YE2-400L2-8	355	480	400L	695	660	636	735	4612	0.83	93.5	6.4	1.6	2.0	3150	47.3800
YE2-400L3-8	375	506	400L	734	697	672	735	4872	0.83	93.5	6.4	1.6	2.0	3200	52.1200

IE3 PERFORMANCE DATA:

2 Pole / 50Hz

Model	Rated Power		Frame size	Rated Current (A) (I_{FL})			Rated speed	Rated torque (T_{FL})	Power Factor	Efficiency Full load	Starting Current	Starting Torque	Maximum Torque	Weight	Moment of inertia (kgm^2)
	Kw	HP		At 380V	At 400V	At 415V	RPM	N.M	(cosΦ)	%	I_{ST} / I_{FL}	T_{ST} / T_{FL}	T_M / T_{FL}	(kg)	
YE3-801-2	0.75	1.00	80	1.70	1.62	1.56	2845	2.5	0.83	80.7	7.0	2.2	2.3	16.5	0.0010
YE3-802-2	1.10	1.50	80	2.41	2.29	2.20	2845	3.7	0.84	82.7	7.6	2.2	2.3	18.5	0.0020
YE3-90S-2	1.50	2.00	90S	3.22	3.06	2.95	2855	5.0	0.84	84.2	7.9	2.2	2.3	25	0.0040
YE3-90L-2	2.20	3.0	90L	4.58	4.35	4.19	2860	7.3	0.85	85.9	7.9	2.2	2.3	26	0.0050
YE3-100L-2	3.0	4.0	100L	6.02	5.71	5.51	2870	10.0	0.87	87.1	8.5	2.2	2.5	34	0.0070
YE3-112M-2	4.0	5.5	112M	7.84	7.45	7.18	2875	13.3	0.88	88.1	8.5	2.2	2.5	43	0.0110
YE3-132S1-2	5.5	7.5	132S	10.65	10.11	9.75	2925	18.0	0.88	89.2	8.5	2.2	2.5	62	0.0230
YE3-132S2-2	7.5	10.0	132S	14.37	13.65	13.16	2925	24.5	0.88	90.1	8.5	2.2	2.5	74	0.0290
YE3-160M1-2	11.0	15.0	160M	20.82	19.78	19.07	2935	35.8	0.88	91.2	8.5	2.2	2.5	105	0.0670
YE3-160M2-2	15.0	20.0	160M	28.2	26.8	25.8	2935	48.8	0.88	91.9	8.5	2.2	2.5	116	0.0770
YE3-160L-2	18.5	25.0	160L	34.2	32.5	31.3	2940	60.1	0.89	92.4	8.5	2.2	2.2	135	0.0930
YE3-180M-2	22.0	30.0	180M	40.5	38.5	37.1	2950	71.2	0.89	92.7	8.5	2.0	2.2	195	0.1570
YE3-200L1-2	30.0	40.0	200L	54.9	52.1	50.3	2950	97.1	0.89	93.3	8.5	2.0	2.3	249	0.2300
YE3-200L2-2	37.0	50	200L	67.4	64.0	61.7	2950	119.8	0.89	93.7	8.5	2.0	2.3	258	0.2560
YE3-225M-2	45	60	225M	81.7	77.6	74.8	2965	144.9	0.89	94.0	8.0	2.0	2.3	310	0.3250
YE3-250M-2	55	75	250M	99.6	94.6	91.2	2970	176.8	0.89	94.3	8.0	2.0	2.3	386	0.3950
YE3-280S-2	75	100	280S	135.2	128.4	123.8	2975	241	0.89	94.7	7.5	2.0	2.3	544	0.6830
YE3-280M-2	90	125	280M	158.2	150.3	144.8	2980	288	0.91	95.0	7.5	2.0	2.3	606	0.7650
YE3-315S-2	110	150	315S	193	183.3	176.7	2975	353	0.91	95.2	7.5	1.8	2.2	900	1.5580
YE3-315M-2	132	180	315M	231	219	212	2975	424	0.91	95.4	7.5	1.8	2.2	980	1.7260
YE3-315L1-2	160	215	315L	276	263	253	2980	513	0.92	95.6	7.5	1.8	2.2	1052	1.9410
YE3-315L2-2	200	270	315L	345	328	316	2980	641	0.92	95.8	7.5	1.8	2.2	1130	2.2120
YE3-355M-2	250	340	355M	436	414	399	2980	801	0.91	95.8	7.5	1.8	2.2	1550	4.0300
YE3-355L1-2	315	430	355L	549	522	503	2980	1009	0.91	95.8	7.5	1.8	2.2	1720	4.6100
YE3-355L2-2	355	480	355L	619	588	567	2980	1138	0.91	95.8	7.5	1.8	2.2	1880	4.8360
YE3-3552-2	375	506	355L	654	621	598	2980	1202	0.91	95.8	7.5	1.8	2.2	2060	5.1120

IE3 PERFORMANCE DATA:

4 Pole / 50Hz

Model	Rated Power		Frame size	Rated Current (A) (I_{FL})			Rated speed	Rated torque (T_{FL})	Power Factor	Efficiency Full load	Starting Current	Starting Torque	Maximum Torque	Weight	Moment of inertia (kgm^2)
	Kw	HP		At 380V	At 400V	At 415V	RPM	N.M	(cosΦ)	%	I_{ST} / I_{FL}	T_{ST} / T_{FL}	T_M / T_{FL}	(kg)	
YE3-801-4	0.55	0.75	80	1.38	1.31	1.26	1410	3.7	0.75	80.8	6.6	2.3	2.3	16.7	0.0010
YE3-802-4	0.75	1.00	80	1.82	1.73	1.66	1410	5.1	0.76	82.5	6.6	2.3	2.3	19.5	0.0020
YE3-90S-4	1.10	1.50	90S	2.61	2.48	2.39	1420	7.4	0.76	84.1	6.8	2.3	2.5	25.9	0.0030
YE3-90L-4	1.50	2.0	90L	3.43	3.25	3.14	1420	10.1	0.78	85.3	7.0	2.3	2.5	29.3	0.0070
YE3-100L1-4	2.2	3.0	100L	4.82	4.58	4.41	1440	14.6	0.80	86.7	7.6	2.3	2.3	33.8	0.0090
YE3-100L2-4	3.0	4.0	100L	6.42	6.10	5.88	1460	19.6	0.81	87.7	7.6	2.3	2.5	39.5	0.0120
YE3-112M-4	4.0	5.5	112M	8.37	7.95	7.66	1445	26.4	0.82	88.6	7.8	2.3	2.5	47.5	0.0150
YE3-132S-4	5.5	7.5	132S	11.37	10.81	10.41	1455	36.1	0.82	89.6	7.9	2.3	2.5	70	0.0220
YE3-132M-4	7.5	10.0	132M	15.01	14.26	13.74	1460	49.1	0.84	90.4	7.5	2.3	2.5	85	0.0500
YE3-160M-4	11.0	15.0	160M	21.8	20.7	19.9	1460	71.9	0.84	91.4	7.7	2.2	2.5	118	0.0640
YE3-160L-4	15.0	20.0	160L	29.5	28.0	27.0	1460	98.1	0.84	92.1	7.8	2.2	2.5	137	0.1240
YE3-180M-4	18.5	25.0	180M	35.3	33.5	32.3	1470	120.2	0.86	92.6	7.8	2.2	2.5	164	0.1340
YE3-180L-4	22.0	30.0	180L	41.8	39.7	38.3	1470	142.9	0.86	93.0	7.8	2.2	2.5	193	0.1880
YE3-200L-4	30.0	40	200L	56.6	53.8	51.9	1470	194.9	0.86	93.6	7.3	2.2	2.5	249	0.2480
YE3-225S-4	37	50	225S	68.8	65.4	63.0	1480	238.7	0.87	93.9	7.4	2.2	2.5	300	0.3880
YE3-225M-4	45	60	225M	83.4	79.3	76.4	1480	290.3	0.87	94.2	7.4	2.2	2.3	343	0.6610
YE3-250M-4	55	75	250M	101.5	96.5	93.0	1480	355	0.87	94.6	7.4	2.2	2.5	443	0.7640
YE3-280S-4	75	100	280S	137.9	131.0	126.2	1485	482	0.87	95.0	6.9	2.2	2.5	461	1.2800
YE3-280M-4	90	125	280M	165	156.8	151.2	1485	579	0.87	95.2	6.9	2.2	2.5	572	1.6600
YE3-315S-4	110	150	315S	199	189	182	1485	707	0.88	95.4	7.0	2.1	2.2	895	2.0300
YE3-315M-4	132	180	315M	238	226	218	1485	849	0.88	95.6	7.0	2.1	2.2	990	3.4150
YE3-315L1-4	160	215	315L	285	271	261	1485	1029	0.89	95.8	7.1	2.1	2.2	1065	3.8070
YE3-315L2-4	200	270	315L	356	338	326	1485	1286	0.89	96.0	7.1	2.1	2.2	1155	3.4230
YE3-355M-4	250	340	355M	440	418	403	1490	1602	0.90	96.0	7.1	2.0	2.2	1650	3.9580
YE3-355L1-4	315	430	355L	554	526	507	1490	2019	0.90	96.0	7.1	2.0	2.2	1760	6.1920
YE3-355L2-4	355	480	355L	624	593	572	1490	2275	0.90	96.0	7.1	2.0	2.2	1890	7.2730
YE3-3552-4	375	506	355L	659	626	604	1490	2403	0.90	96.0	7.1	2.0	2.2	2100	8.1500

IE3 PERFORMANCE DATA:

6 Pole / 50Hz

Model	Rated Power		Frame size	Rated Current (A) (I_{FL})			Rated speed	Rated torque (T_{FL})	Power Factor	Efficiency Full load	Starting Current	Starting Torque	Maximum Torque	Weight	Moment of inertia (kgm^2)
	Kw	HP		At 380V	At 400V	At 415V	RPM	N.M	(cosΦ)	%	I_{ST} / I_{FL}	T_{ST} / T_{FL}	T_M / T_{FL}	(kg)	
YE3-801A-6	0.25	0.33	80	0.81	0.77	0.75	865	2.8	0.68	68.6	6.0	1.9	2.0	15	0.0090
YE3-801-6	0.37	0.50	80	1.09	1.04	1.00	885	4.0	0.70	73.5	6.0	1.9	2.0	17	0.0024
YE3-802-6	0.55	0.75	80	1.50	1.43	1.38	885	5.9	0.72	77.2	6.0	1.9	2.1	19	0.0026
YE3-90S-6	0.75	1.0	90S	2.01	1.91	1.84	925	7.7	0.72	78.9	6.0	2.0	2.1	22.5	0.0040
YE3-90L-6	1.1	1.5	90L	2.83	2.69	2.59	920	11.4	0.73	81.0	6.0	2.0	2.1	25.5	0.0060
YE3-100L-6	1.5	2.0	100L	3.68	3.50	3.37	930	15.4	0.75	82.5	6.5	2.0	2.1	33	0.0160
YE3-112M-6	2.2	3.0	112M	5.22	4.96	4.78	945	22.2	0.76	84.3	6.6	2.0	2.1	40	0.0390
YE3-132S-6	3.0	4.0	132S	7.01	6.66	6.42	965	29.7	0.76	85.6	6.8	2.0	2.1	50	0.0350
YE3-132M1-6	4.0	5.5	132M	9.21	8.75	8.44	965	39.6	0.76	86.8	6.8	2.0	2.1	66	0.0430
YE3-132M2-6	5.5	7.5	132M	12.3	11.7	11.3	965	54.4	0.77	88.0	7.0	2.0	2.1	74	0.0560
YE3-160M-6	7.5	10.0	160M	16.6	15.8	15.2	970	73.8	0.77	89.1	7.0	2.0	2.1	113	0.1400
YE3-160L-6	11.0	15.0	160L	23.7	22.5	21.7	970	108.3	0.78	90.3	7.2	2.0	2.1	134	0.1920
YE3-180L-6	15.0	20.0	180L	30.9	29.3	28.2	975	146.9	0.81	91.2	7.3	2.0	2.1	181	0.3190
YE3-200L1-6	18.5	25	200L	37.8	36.0	34.7	980	180.3	0.81	91.7	7.3	2.0	2.1	216	0.4460
YE3-200L2-6	22	30	200L	43.7	41.5	40.0	980	214.4	0.83	92.2	7.4	2.0	2.1	241	0.5570
YE3-225M-6	30	40	225M	58.4	55.5	53.5	980	292.3	0.84	92.9	6.9	2.0	2.1	290	0.8320
YE3-250M-6	37	50	250M	70.1	66.6	64.2	980	361	0.86	93.3	7.1	2.0	2.1	450	1.4470
YE3-280S-6	45	60	280S	84.8	80.6	77.7	985	436	0.86	93.7	7.3	2.0	2.0	481	2.2520
YE3-280M-6	55	75	280M	103	98.1	94.6	985	533	0.86	94.1	7.3	2.0	2.0	566	2.7260
YE3-315S-6	75	100	315S	140	133	128	985	727	0.86	94.6	6.6	2.0	2.0	825	3.9840
YE3-315M-6	90	125	315M	168	159	153	985	872	0.86	94.9	6.7	2.0	2.0	925	4.5000
YE3-315L1-6	110	150	315L	204	194	187	985	1066	0.86	95.1	6.7	2.0	2.0	1020	5.6070
YE3-315L2-6	132	180	315L	242	230	221	985	1280	0.87	95.4	6.8	2.0	2.0	1100	6.9350
YE3-355M1-6	160	215	355M	292	278	268	990	1543	0.87	95.6	6.8	1.8	2.0	1470	10.2220
YE3-355M2-6	200	270	355M	365	346	334	990	1929	0.87	95.8	6.8	1.8	2.0	1600	11.0310
YE3-355L1-6	250	340	355L	456	433	417	990	2411	0.87	95.8	6.8	1.8	2.0	1800	13.8970
YE3-355L2-6	315	430	355L	568	539	520	990	3038	0.88	95.8	6.7	1.8	2.0	2000	16.6190
YE3-400L1-6	355	480	400L	655	622	599	990	3424	0.86	95.8	6.7	1.6	2.0	3200	30.4200
YE3-400L2-6	375	506	400L	692	657	633	990	3617	0.86	95.8	6.7	1.6	2.0	3500	32.1300

IE3 PERFORMANCE DATA:

8 Pole / 50Hz

Model	Rated Power		Frame size	Rated Current (A) (I_{FL})			Rated speed	Rated torque (T_{FL})	Power Factor	Efficiency Full load	Starting Current	Starting Torque	Maximum Torque	Weight	Moment of inertia (kgm^2)
	Kw	HP		At 380V	At 400V	At 415V	RPM	N.M	(cosΦ)	%	I_{ST} / I_{FL}	T_{ST} / T_{FL}	T_M / T_{FL}	(kg)	
YE3-802-8	0.25	0.33	80	0.97	0.92	0.89	645	3.7	0.61	64.1	3.3	1.8	1.9	17.85	0.0025
YE3-90S-8	0.37	0.50	90S	1.35	1.28	1.24	670	5.3	0.60	69.3	4.0	1.8	1.9	25.2	0.0038
YE3-90L-8	0.55	0.75	90L	1.91	1.81	1.75	670	7.8	0.60	73.0	4.0	1.8	2.0	27.3	0.0058
YE3-100L1-8	0.75	1.0	100L	2.27	2.15	2.08	680	10.5	0.67	75.0	4.0	1.8	2.0	34.65	0.0158
YE3-100L2-8	1.1	1.5	100L	3.12	2.96	2.85	680	15.4	0.69	77.7	5.0	1.8	2.0	35.7	0.0223
YE3-112M-8	1.5	2.0	112M	4.14	3.94	3.79	700	20.5	0.69	79.7	5.0	1.8	2.0	40.425	0.0387
YE3-132S-8	2.2	3.0	132S	5.75	5.46	5.26	710	29.6	0.71	81.9	6.0	1.8	2.0	56.7	0.0346
YE3-132M-8	3.0	4.0	132M	7.48	7.10	6.85	710	40.3	0.73	83.5	6.0	1.8	2.0	62.26	0.0428
YE3-160M1-8	4.0	5.5	160M	9.82	9.33	8.99	720	53.1	0.73	84.8	6.0	1.9	2.0	90.51	0.0557
YE3-160M2-8	5.5	7.5	160M	13.1	12.4	12.0	720	72.9	0.74	86.2	6.0	1.9	2.0	103.42	0.1380
YE3-160L-8	7.5	10.0	160L	17.4	16.5	15.9	720	99.5	0.75	87.3	6.0	1.9	2.0	126	0.1910
YE3-180L-8	11.0	15.0	180L	24.8	23.6	22.7	730	143.9	0.76	88.6	6.6	2.0	2.0	168	0.3160
YE3-200L-8	15.0	20.0	200L	33.5	31.8	30.6	730	196.2	0.76	89.6	6.6	2.0	2.0	221.55	0.4420
YE3-225S-8	18.5	25	225S	41.0	39.0	37.6	730	242.0	0.76	90.1	6.6	1.9	2.0	283.5	0.5550
YE3-225M-8	22	30	225M	47.3	44.9	43.3	730	287.8	0.78	90.6	6.6	1.9	2.0	309.75	0.8310
YE3-250M-8	30	40	250M	63.2	60.0	57.9	730	392.4	0.79	91.3	6.6	1.9	2.0	388.5	1.4450
YE3-280S-8	37	50	280S	77.5	73.6	71.0	735	481	0.79	91.8	6.6	1.9	2.0	498.75	2.2510
YE3-280M-8	45	60	280M	93.9	89.2	86.0	735	585	0.79	92.2	6.2	1.9	2.0	582.75	2.7160
YE3-315S-8	55	75	315S	112	106.0	102.1	735	715	0.81	92.5	6.2	1.8	2.0	810	3.9770
YE3-315M-8	75	100	315M	151	144	138	735	974	0.81	93.1	5.8	1.8	2.0	970	4.4500
YE3-315L1-8	90	125	315L	179	170	163	735	1169	0.82	93.4	5.9	1.8	2.0	1070	5.5570
YE3-315L2-8	110	150	315L	218	207	199	735	1429	0.82	93.7	6.0	1.8	2.0	1160	6.9280
YE3-355M1-8	132	180	355M	260	247	238	735	1715	0.82	94.0	6.1	1.8	2.0	1520	10.1330
YE3-355M2-8	160	215	355M	311	295	284	735	2079	0.83	94.3	6.1	1.8	2.0	1620	10.9830
YE3-355L1-8	200	270	355L	387	368	354	735	2598	0.83	94.6	6.4	1.8	2.0	1800	11.5630
YE3-355L2-8	250	340	355L	484	460	443	735	3248	0.83	94.6	6.4	1.8	2.0	2000	20.1100
YE3-400L1-8	315	430	400L	610	579	558	735	4092	0.83	94.6	6.4	1.6	2.0	3100	40.1000
YE3-400L2-8	355	480	400L	687	653	629	735	4612	0.83	94.6	6.4	1.6	2.0	3150	47.3800
YE3-400L3-8	375	506	400L	726	689	664	735	4872	0.83	94.6	6.4	1.6	2.0	3200	52.1200

IE4 PERFORMANCE DATA:

2 Pole / 50Hz

Model	Rated Power		Frame size	Rated Current (A) (I_{FL})			Rated speed	Rated torque (T_{FL})	Power Factor	Efficiency Full load	Starting Current	Starting Torque	Maximum Torque	Weight	Moment of inertia (kgm^2)
	Kw	HP		At 380V	At 400V	At 415V	RPM	N.M	(cosΦ)	%	I_{ST} / I_{FL}	T_{ST} / T_{FL}	T_M / T_{FL}	(kg)	
YE4-801-2	0.75	1.00	80	1.66	1.58	1.52	2885	2.5	0.82	83.5	8.5	2.2	2.3	16.5	0.0011
YE4-802-2	1.10	1.50	80	2.36	2.25	2.16	2890	3.6	0.83	85.2	8.5	2.2	2.3	18.5	0.0013
YE4-90S-2	1.50	2.00	90S	3.14	2.98	2.87	2910	4.9	0.84	86.5	9.0	2.2	2.3	25	0.0019
YE4-90L-2	2.20	3.0	90L	4.47	4.25	4.09	2910	7.2	0.85	88.0	9.0	2.2	2.3	26	0.0022
YE4-100L-2	3.0	4.0	100L	5.88	5.59	5.38	2920	9.8	0.87	89.1	9.5	2.2	2.5	34	0.0043
YE4-112M-2	4.0	5.5	112M	7.67	7.29	7.03	2920	13.1	0.88	90.0	9.5	2.2	2.5	43	0.0065
YE4-132S1-2	5.5	7.5	132S	10.45	9.92	9.57	2925	18.0	0.88	90.9	9.5	2.2	2.5	62	0.0146
YE4-132S2-2	7.5	10.0	132S	14.12	13.42	12.93	2925	24.5	0.88	91.7	9.5	2.2	2.5	74	0.0157
YE4-160M1-2	11.0	15.0	160M	20.28	19.27	18.57	2935	35.8	0.89	92.6	9.5	2.2	2.5	105	0.0549
YE4-160M2-2	15.0	20.0	160M	27.4	26.1	25.1	2935	48.8	0.89	93.3	9.5	2.2	2.5	116	0.0635
YE4-160L-2	18.5	25.0	160L	33.7	32.0	30.9	2940	60.1	0.89	93.7	9.5	2.2	2.2	135	0.0725
YE4-180M-2	22.0	30.0	180M	40.0	38.0	36.6	2950	71.2	0.89	94.0	9.5	2.0	2.2	195	0.1025
YE4-200L1-2	30.0	40.0	200L	54.2	51.5	49.6	2950	97.1	0.89	94.5	9.0	2.0	2.3	249	0.1730
YE4-200L2-2	37.0	52	200L	66.6	63.3	61.0	2950	119.8	0.89	94.8	9.0	2.0	2.3	258	0.1950
YE4-225M-2	45	60	225M	80.0	76.0	73.2	2965	144.9	0.90	95.0	9.0	2.0	2.3	310	0.3250
YE4-250M-2	55	75	250M	97.4	92.6	89.2	2970	176.8	0.90	95.3	9.0	2.0	2.3	386	0.3950
YE4-280S-2	75	100	280S	132.4	125.8	121.3	2975	241	0.90	95.6	8.5	2.0	2.3	544	0.6830
YE4-280M-2	90	125	280M	158.6	150.7	145.2	2975	289	0.90	95.8	8.5	2.0	2.3	606	0.7650
YE4-315S-2	110	150	315S	193	183.8	177.1	2975	353	0.90	96.0	8.5	1.8	2.2	930	1.5580
YE4-315M-2	132	180	315M	232	220	212	2975	424	0.90	96.2	8.5	1.8	2.2	980	1.7260
YE4-315L1-2	160	215	315L	277	264	254	2980	513	0.91	96.3	8.5	1.8	2.2	1090	1.9410
YE4-315L2-2	200	270	315L	346	329	317	2980	641	0.91	96.5	8.5	1.8	2.2	1190	2.2120
YE4-355M-2	250	340	355M	433	411	396	2980	801	0.91	96.5	8.5	1.6	2.2	1802	4.0300
YE4-355L1-2	315	430	355L	545	518	499	2980	1009	0.91	96.5	8.5	1.6	2.2	2017	4.6100
YE4-355L2-2	355	480	355L	614	584	562	2980	1138	0.91	96.5	8.5	1.6	2.2	2130	4.8360
YE4-3552-2	375	506	355L	649	616	594	2980	1202	0.91	96.5	8.5	1.6	2.2	2300	5.1120

IE4 PERFORMANCE DATA:

4 Pole / 50Hz

Model	Rated Power		Frame size	Rated Current (A) (I_{FL})			Rated speed	Rated torque (T_{FL})	Power Factor	Efficiency Full load	Starting Current	Starting Torque	Maximum Torque	Weight	Moment of inertia (kgm^2)
	Kw	HP		At 380V	At 400V	At 415V	RPM	N.M	(cosΦ)	%	I_{ST} / I_{FL}	T_{ST} / T_{FL}	T_M / T_{FL}	(kg)	
YE4-801-4	0.55	0.75	80	1.33	1.26	1.22	1410	3.7	0.75	83.9	6.5	2.3	2.3	16.7	0.0017
YE4-802-4	0.75	1.00	80	1.77	1.68	1.62	1410	5.1	0.75	85.7	8.5	2.3	2.3	19.5	0.0017
YE4-90S-4	1.10	1.50	90S	2.52	2.40	2.31	1420	7.4	0.76	87.2	8.5	2.3	2.5	25.9	0.0023
YE4-90L-4	1.50	2.0	90L	3.36	3.19	3.07	1420	10.1	0.77	88.2	9.0	2.3	2.5	29.3	0.0031
YE4-100L1-4	2.2	3.0	100L	4.61	4.38	4.22	1440	14.6	0.81	89.5	9.0	2.3	2.3	33.8	0.0078
YE4-100L2-4	3.0	4.0	100L	6.15	5.84	5.63	1440	19.9	0.82	90.4	9.5	2.3	2.5	39.5	0.0087
YE4-112M-4	4.0	5.5	112M	8.14	7.73	7.45	1445	26.4	0.82	91.1	9.5	2.3	2.5	47.5	0.0185
YE4-132S-4	5.5	7.5	132S	10.96	10.41	10.03	1455	36.1	0.83	91.9	9.5	2.3	2.5	70	0.0330
YE4-132M-4	7.5	10.0	132M	14.65	13.92	13.41	1460	49.1	0.84	92.6	9.5	2.3	2.5	85	0.0412
YE4-160M-4	11.0	15.0	160M	21.1	20.0	19.3	1460	71.9	0.85	93.3	9.5	2.2	2.5	118	0.1052
YE4-160L-4	15.0	20.0	160L	28.2	26.8	25.8	1460	98.1	0.86	93.9	9.5	2.2	2.5	137	0.1123
YE4-180M-4	18.5	25.0	180M	34.7	33.0	31.8	1470	120.2	0.86	94.2	9.5	2.2	2.5	164	0.1695
YE4-180L-4	22.0	30.0	180L	41.1	39.1	37.7	1470	142.9	0.86	94.5	9.5	2.2	2.5	193	0.1865
YE4-200L-4	30.0	40	200L	55.9	53.1	51.1	1470	194.9	0.86	94.9	9.0	2.2	2.5	249	0.3020
YE4-225S-4	37	50	225S	68.7	65.2	62.9	1480	238.7	0.86	95.2	9.0	2.2	2.5	300	0.5380
YE4-225M-4	45	60	225M	83.3	79.2	76.3	1480	290.3	0.86	95.4	9.0	2.2	2.3	343	0.6350
YE4-250M-4	55	75	250M	101.5	96.5	93.0	1480	355	0.86	95.7	9.0	2.2	2.5	443	0.7850
YE4-280S-4	75	100	280S	134.9	128.1	123.5	1485	482	0.88	96.0	8.5	2.2	2.5	461	1.5520
YE4-280M-4	90	125	280M	162	153.6	148.1	1485	579	0.88	96.1	8.5	2.2	2.5	572	1.8650
YE4-315S-4	110	150	315S	195	185	179	1485	707	0.89	96.3	8.5	2.1	2.2	931	3.4800
YE4-315M-4	132	180	315M	234	222	214	1485	849	0.89	96.4	8.5	2.1	2.2	1017	3.6780
YE4-315L1-4	160	215	315L	283	269	259	1485	1029	0.89	96.6	8.5	2.1	2.2	1085	4.4720
YE4-315L2-4	200	270	315L	349	332	320	1485	1286	0.90	96.7	8.5	2.1	2.2	1200	4.8560
YE4-355M-4	250	340	355M	436	415	400	1490	1602	0.90	96.7	8.5	2.1	2.2	1815	6.1920
YE4-355L1-4	315	430	355L	550	522	504	1490	2019	0.90	96.7	8.5	2.1	2.2	1984	7.2730
YE4-355L2-4	355	480	355L	620	589	567	1490	2275	0.90	96.7	8.5	2.1	2.2	2290	7.2730
YE4-3552-4	375	506	355L	655	622	599	1490	2403	0.90	96.7	8.5	2.1	2.2	2370	8.1500

IE4 PERFORMANCE DATA:

6 Pole / 50Hz

Model	Rated Power		Frame size	Rated Current (A) (I_{FL})			Rated speed	Rated torque (T_{FL})	Power Factor	Efficiency Full load	Starting Current	Starting Torque	Maximum Torque	Weight	Moment of inertia (kgm^2)
	Kw	HP		At 380V	At 400V	At 415V	RPM	N.M	(cosΦ)	%	I_{ST} / I_{FL}	T_{ST} / T_{FL}	T_M / T_{FL}	(kg)	
YE4-801A-6	0.25	0.33	80	0.75	0.72	0.69	865	2.8	0.68	74.1	4.0	2.1	2.1	15	0.0090
YE4-801-6	0.37	0.50	80	1.03	0.98	0.94	885	4.0	0.70	78.0	4.7	2.1	2.1	17	0.0024
YE4-802-6	0.55	0.75	80	1.48	1.40	1.35	885	5.9	0.70	80.9	4.7	2.1	2.1	19	0.0026
YE4-90S-6	0.75	1.0	90S	1.94	1.84	1.78	920	7.8	0.71	82.7	7.5	2.1	2.1	22.5	0.0040
YE4-90L-6	1.1	1.5	90L	2.71	2.57	2.48	920	11.4	0.73	84.5	7.5	2.1	2.1	25.5	0.0060
YE4-100L-6	1.5	2.0	100L	3.63	3.45	3.33	930	15.4	0.73	85.9	7.5	2.1	2.1	33	0.0160
YE4-112M-6	2.2	3.0	112M	5.17	4.91	4.73	945	22.2	0.74	87.4	7.5	2.1	2.1	40	0.0390
YE4-132S-6	3.0	4.0	132S	6.95	6.60	6.37	965	29.7	0.74	88.6	7.5	2.0	2.1	50	0.0350
YE4-132M1-6	4.0	5.5	132M	9.18	8.72	8.40	965	39.6	0.74	89.5	8.0	2.0	2.1	66	0.0430
YE4-132M2-6	5.5	7.5	132M	12.3	11.7	11.3	965	54.4	0.75	90.5	8.0	2.0	2.1	74	0.0560
YE4-160M-6	7.5	10.0	160M	15.8	15.0	14.5	970	73.8	0.79	91.3	8.0	2.0	2.1	113	0.1400
YE4-160L-6	11.0	15.0	160L	22.6	21.5	20.7	970	108.3	0.80	92.3	8.5	2.0	2.1	134	0.1920
YE4-180L-6	15.0	20.0	180L	30.3	28.8	27.7	975	146.9	0.81	92.9	8.5	2.0	2.1	181	0.3190
YE4-200L1-6	18.5	25	200L	37.2	35.3	34.0	980	180.3	0.81	93.4	8.5	2.0	2.1	216	0.4460
YE4-200L2-6	22	30	200L	44.0	41.8	40.3	980	214.4	0.81	93.7	8.5	2.0	2.1	241	0.5570
YE4-225M-6	30	40	225M	58.3	55.4	53.4	980	292.3	0.83	94.2	8.3	2.0	2.1	290	0.8320
YE4-250M-6	37	50	250M	70.8	67.3	64.8	980	361	0.84	94.5	8.3	2.0	2.1	450	1.4470
YE4-280S-6	45	60	280S	84.9	80.6	77.7	985	436	0.85	94.8	8.5	2.0	2.0	481	2.2520
YE4-280M-6	55	75	280M	102	97.1	93.6	985	533	0.86	95.1	8.5	2.0	2.0	566	2.7260
YE4-315S-6	75	100	315S	142	135	130	985	727	0.84	95.4	8.0	1.6	2.0	866	3.9840
YE4-315M-6	90	125	315M	168	160	154	985	872	0.85	95.6	8.0	1.6	2.0	948	4.5000
YE4-315L1-6	110	150	315L	205	195	188	985	1066	0.85	95.8	8.0	1.6	2.0	1120	5.6070
YE4-315L2-6	132	180	315L	243	231	222	985	1280	0.86	96.0	8.0	1.6	2.0	1185	6.9350
YE4-355M1-6	160	215	355M	290	276	266	990	1543	0.87	96.2	8.0	1.6	2.0	1709	10.2220
YE4-355M2-6	200	270	355M	363	345	332	990	1929	0.87	96.3	8.0	1.6	2.0	1945	11.0310
YE4-355L1-6	250	340	355L	452	430	414	990	2411	0.87	96.5	8.0	1.6	2.0	2092	13.8970
YE4-355L2-6	315	430	355L	563	535	516	990	3038	0.88	96.6	7.9	0.9	1.8	2150	16.6190
YE4-400L1-6	355	480	400L	649	617	595	990	3424	0.86	96.6	7.9	0.9	1.8	3350	30.4200
YE4-400L2-6	375	506	400L	686	652	628	990	3617	0.86	96.6	8.0	0.9	1.8	3500	32.1300

IE4 PERFORMANCE DATA:

8 Pole / 50Hz

Model	Rated Power		Frame size	Rated Current (A) (I_{FL})			Rated speed	Rated torque (T_{FL})	Power Factor	Efficiency Full load	Starting Current	Starting Torque	Maximum Torque	Weight	Moment of inertia (kgm^2)
	Kw	HP		At 380V	At 400V	At 415V	RPM	N.M	(cosΦ)	%	I_{ST} / I_{FL}	T_{ST} / T_{FL}	T_M / T_{FL}	(kg)	
YE4-802-8	0.25	0.33	80	0.88	0.84	0.81	645	3.7	0.61	70.8	3.3	1.8	1.9	18	0.0025
YE4-90S-8	0.37	0.50	90S	1.26	1.20	1.15	670	5.3	0.60	74.3	4.0	1.8	1.9	25	0.0038
YE4-90L-8	0.55	0.75	90L	1.81	1.72	1.66	670	7.8	0.60	77.0	4.0	1.8	2.0	27	0.0058
YE4-100L1-8	0.75	1.0	100L	2.20	2.09	2.02	680	10.5	0.66	78.4	7.0	1.8	2.0	35	0.0158
YE4-100L2-8	1.1	1.5	100L	3.09	2.93	2.83	680	15.4	0.67	80.8	7.0	1.8	2.0	36	0.0223
YE4-112M-8	1.5	2.0	112M	4.00	3.80	3.66	700	20.5	0.69	82.6	7.0	1.8	2.0	40	0.0387
YE4-132S-8	2.2	3.0	132S	5.65	5.37	5.17	710	29.6	0.70	84.5	7.5	1.8	2.0	57	0.0346
YE4-132M-8	3.0	4.0	132M	7.58	7.20	6.94	710	40.3	0.70	85.9	7.8	1.8	2.0	62	0.0428
YE4-160M1-8	4.0	5.5	160M	9.83	9.34	9.00	720	53.1	0.71	87.1	7.9	1.8	2.0	91	0.0557
YE4-160M2-8	5.5	7.5	160M	13.1	12.5	12.0	720	72.9	0.72	88.3	8.1	1.8	2.0	103	0.1380
YE4-160L-8	7.5	10.0	160L	17.2	16.4	15.8	720	99.5	0.74	89.3	7.8	1.8	2.0	126	0.1910
YE4-180L-8	11.0	15.0	180L	25.0	23.7	22.9	730	143.9	0.74	90.4	7.9	1.8	2.0	168	0.3160
YE4-200L-8	15.0	20.0	200L	33.3	31.7	30.5	730	196.2	0.75	91.2	8.0	1.8	2.0	222	0.4420
YE4-225S-8	18.5	25	225S	40.9	38.8	37.4	730	242.0	0.75	91.7	8.1	1.8	2.0	284	0.5550
YE4-225M-8	22	30	225M	47.8	45.4	43.7	730	287.8	0.76	92.1	8.3	1.8	2.0	310	0.8310
YE4-250M-8	30	40	250M	63.9	60.7	58.5	730	392.4	0.77	92.7	7.9	1.8	2.0	389	1.4450
YE4-280S-8	37	50	280S	77.4	73.5	70.9	735	481	0.78	93.1	7.9	1.8	2.0	499	2.2510
YE4-280M-8	45	60	280M	93.9	89.2	85.9	735	585	0.78	93.4	7.9	1.8	2.0	583	2.7160
YE4-315S-8	55	75	315S	111	105.9	102.1	735	715	0.80	93.7	8.2	1.6	2.0	950	3.9770
YE4-315M-8	75	100	315M	151	144	138	735	974	0.80	94.2	7.6	1.6	2.0	1030	4.4500
YE4-315L1-8	90	125	315L	179	170	164	735	1169	0.81	94.4	7.7	1.6	2.0	1124	5.5570
YE4-315L2-8	110	150	315L	218	207	200	735	1429	0.81	94.7	7.7	1.6	2.0	1218	6.9280
YE4-355M1-8	132	180	355M	261	248	239	735	1715	0.81	94.9	7.7	1.6	2.0	1800	10.1330
YE4-355M2-8	160	215	355M	312	296	285	735	2079	0.82	95.1	7.7	1.6	2.0	1890	10.9830
YE4-355L1-8	200	270	355L	388	369	356	735	2598	0.82	95.4	7.8	1.6	2.0	2040	11.5630
Y2-355L2-8	250	340	355L	480	456	439	735	3248	0.83	95.4	7.6	1.1	1.8	2100	20.1100
YE4-400L1-8	315	430	400L	604	574	553	735	4092	0.83	95.4	7.6	0.9	1.8	3200	40.1000
YE4-400L2-8	355	480	400L	681	647	624	735	4612	0.83	95.4	7.6	0.9	1.8	3350	47.3800
YE4-400L3-8	375	506	400L	720	684	659	735	4872	0.83	95.4	7.6	0.9	1.8	3450	52.1200

B3 Mounting Dimension

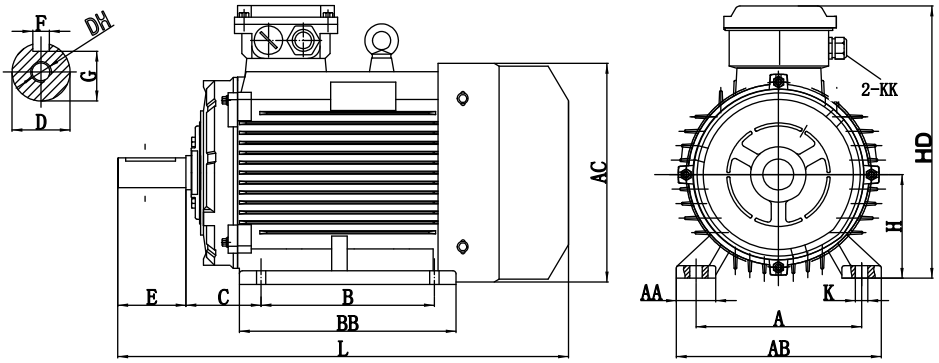

Frame size	poles	Mounting dimensions (mm.)										Overall dimensions (mm.)					
		A	B	C	D	E	F	G	H	K	DH	AB	AC	HD	BB	AA	L
71	2、4、6	112	90	45	14	30	5	11	71	7	M5*13	136	139	185	107	24	247
80	2、4、6、8	125	100	50	19	40	6	15.5	80	10	M6*16	158	157	229	131	33	280
90S	2、4、6、8	140	100	56	24	50	8	20	90	10	M8*20	180	176	245	140	36	316
90L	2、4、6、8	140	125	56	24	50	8	20	90	10	M8*20	180	176	245	165	36	340
100L	2、4、6、8	160	140	63	28	60	8	24	100	12	M10*20	198	196	258	175	38	376
112M	2、4、6、8	190	140	70	28	60	8	24	112	12	M10*25	230	220	306	170	45	400
132S	2、4、6、8	216	140	89	38	80	10	33	132	12	M12*30	262	258	340	178	50	441
132M	2、4、6、8	216	178	89	38	80	10	33	132	12	M12*30	262	258	340	216	50	475
160M	2、4、6、8	254	210	108	42	110	12	37	160	15	M16*36	313	311	414	256	65	610
160L	2、4、6、8	254	254	108	42	110	12	37	160	15	M16*36	313	311	414	300	65	655
180M	2、4、6、8	279	241	121	48	110	14	42.5	180	15	M16*36	345	352	450	300	70	690
180L	2、4、6、8	279	279	121	48	110	14	42.5	180	15	M16*36	345	352	450	340	70	730
200L	2、4、6、8	318	305	133	55	110	16	49	200	19	M20*42	386	394	508	355	65	760
225S	4、6、8	356	286	149	60	140	18	53	225	19	M20*40	423	442	555	360	75	810
225M	2	356	311	149	55	110	16	49	225	19	M20*40	423	442	555	385	75	805
	4、6、8	356	311	149	60	140	18	53	225	19	M20*40	423	442	555	385	75	835
250M	2	406	349	168	60	140	18	53	250	24	M20*40	490	481	615	445	80	930
	4、6、8	406	349	168	65	140	18	58	250	24	M20*42	490	481	615	445	80	930
280S	2	457	368	190	65	140	18	58	280	24	M20*40	532	543	675	485	80	985
	4、6、8	457	368	190	75	140	20	67.5	280	24	M20*40	532	543	675	485	80	985
280M	2	457	419	190	65	140	18	58	280	24	M20*40	532	543	675	530	80	1035
	4、6、8	457	419	190	75	140	20	67.5	280	24	M20*40	532	543	675	530	80	1035
315S	2	508	406	216	65	140	18	58	315	28	M20*42	620	616	850	560	120	1190
	4、6、8	508	406	216	80	170	22	71	315	28	M20*40	620	616	850	560	120	1220
315M	2	508	457	216	65	140	18	58	315	28	M20*40	620	616	850	670	120	1300
	4、6、8	508	457	216	80	170	22	71	315	28	M20*40	620	616	850	670	120	1330
315L	2	508	508	216	65	140	18	58	315	28	M20*40	620	616	850	670	120	1300
	4、6、8	508	508	216	80	170	22	71	315	28	M20*42	620	616	850	670	120	1330
355M	2	610	560	254	75	140	20	67.5	355	28	M20*40	725	694	1000	750	112	1525
	4、6、8	610	560	254	95	170	25	86	355	28	M20*40	725	694	1000	750	112	1555
355L	2	610	630	254	75	140	20	67.5	355	28	M20*40	725	694	1000	750	112	1525
	4、6、8	610	630	254	95	170	25	86	355	28	M20*40	725	694	1000	750	112	1555
400	4、6、8	686	710	280	120	210	32	109	400	35	M20*40	810	850	1085	1085	125	1954

R=0 distance from flange to shaft shoulder

B5 Mounting Dimension

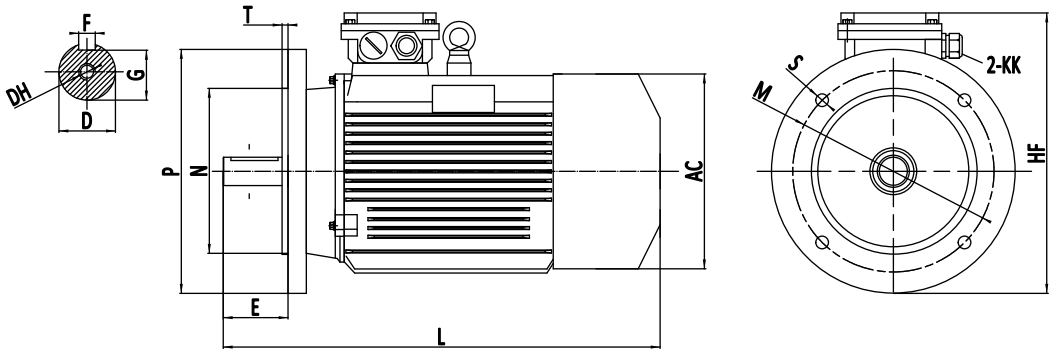

Frame size	Poles	Mounting dimensions (mm.)													Overall dimensions		
		D	E	F	G	H	K	M	N	P	R	S	T	DH	AC	HF	L
71	2、4、6、8	14	30	5	11	71	7	130	110	160	0±1.5	4-Φ10	3.5	M5*13	139	190	247
80	2、4、6、8	19	40	6	15.5	80	10	165	130	200	0±1.5	4-Φ12	3.5	M6*16	168	225	280
90S	2、4、6、8	24	50	8	20	90	10	165	130	200	0±1.5	4-Φ12	3.5	M8*20	193	248	326
90L	2、4、6、8	24	50	8	20	90	10	165	130	200	0±1.5	4-Φ12	3.5	M8*20	193	248	351
100L	2、4、6、8	28	60	8	24	100	12	215	180	250	0±2	4-Φ15	4	M10*20	217	270	376
112M	2、4、6、8	28	60	8	24	112	12	215	180	250	0±2	4-Φ15	4	M10*25	220	292	400
132S	2、4、6、8	38	80	10	33	132	12	265	230	300	0±2	4-Φ15	4	M12*30	258	331	470
132M	2、4、6、8	38	80	10	33	132	12	265	230	300	0±2	4-Φ15	4	M12*30	258	331	510
160M	2、4、6、8	42	110	12	37	160	15	300	250	350	0±3	4-Φ19	5	M16*36	330	414	610
160L	2、4、6、8	42	110	12	37	160	15	300	250	350	0±3	4-Φ19	5	M16*36	330	414	655
180M	2、4、6、8	48	110	14	42.5	180	15	300	250	350	0±3	4-Φ19	5	M16*36	380	447	690
180L	2、4、6、8	48	110	14	42.5	180	15	300	250	350	0±3	4-Φ19	5	M16*36	380	447	730
200L	2、4、6、8	55	110	16	49	200	19	350	300	400	0±3	4-Φ19	5	M20*42	420	505	760
225S	4、6、8	60	140	18	53	225	19	400	350	450	0±4	8-Φ19	5	M20*40	470	545	810
225M	2	55	110	16	49	225	19	400	350	450	0±4	8-Φ19	5	M20*40	470	545	805
	4、6、8	60	140	18	53	225	19	400	350	450	0±4	8-Φ19	5	M20*40	470	545	835
250M	2	60	140	18	53	250	24	500	450	550	0±4	8-Φ19	5	M20*40	510	615	930
	4、6、8	65	140	18	58	250	24	500	450	550	0±4	8-Φ19	5	M20*42	510	615	930
280S	2	65	140	18	58	280	24	500	450	550	0±4	8-Φ19	5	M20*40	580	665	985
	4、6、8	75	140	20	67.5	280	24	500	450	550	0±4	8-Φ19	5	M20*40	580	665	985
280M	2	65	140	18	58	280	24	500	450	550	0±4	8-Φ19	5	M20*40	580	665	1035
	4、6、8	75	140	20	67.5	280	24	500	450	550	0±4	8-Φ19	5	M20*40	580	665	1035
315S	2	65	140	18	58	315	28	600	550	660	0±4	8-Φ24	6	M20*42	620	845	1190
	4、6、8	80	170	22	71	315	28	600	550	660	0±4	8-Φ24	6	M20*40	620	845	1220
315M	2	65	140	18	58	315	28	600	550	660	0±4	8-Φ24	6	M20*40	620	845	1300
	4、6、8	80	170	22	71	315	28	600	550	660	0±4	8-Φ24	6	M20*40	620	845	1330
315L	2	65	140	18	58	315	28	600	550	660	0±4	8-Φ24	6	M20*40	620	845	1300
	4、6、8	80	170	22	71	315	28	600	550	660	0±4	8-Φ24	6	M20*42	620	845	1330
355M	2	75	140	20	67.5	355	28	740	680	800	0±4	8-Φ24	6	M20*40	700	1000	1525
	4、6、8	95	170	25	86	355	28	740	680	800	0±4	8-Φ24	6	M20*40	700	1000	1555
355L	2	75	140	20	67.5	355	28	740	680	800	0±4	8-Φ24	6	M20*40	700	1000	1525
	4、6、8	95	170	25	86	355	28	740	680	800	0±4	8-Φ24	6	M20*40	700	1000	1555

R=0 distance from flange to shaft shoulder

B35 Mounting Dimension

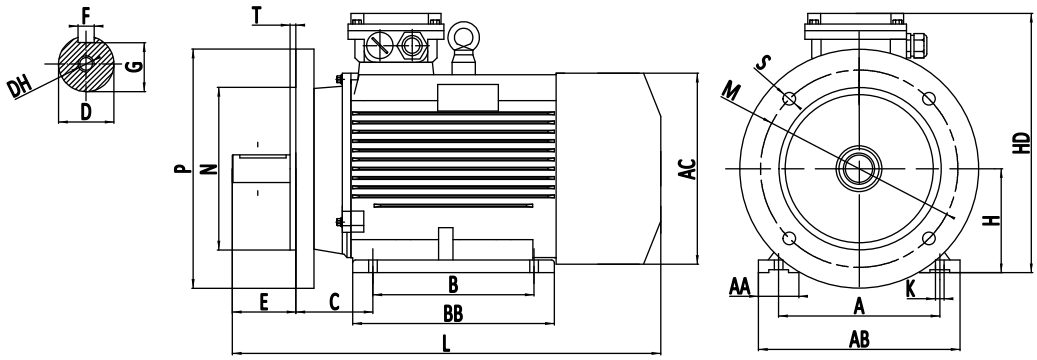

Frame size	poles	Mounting dimensions (mm.)															Overall dimensions (mm.)					
		A	B	C	D	E	F	G	H	K	M	N	P	R	S	T	DH	AB	AC	BB	AA	HD	L
71	2、4、6	112	90	45	14	30	5	11	71	7	130	110	160	0±1.5	4-Φ10	3.5	M5*13	136	139	107	24	185	247
80	2、4、6、8	125	100	50	19	40	6	15.5	80	10	165	130	200	0±1.5	4-Φ12	3.5	M6*16	158	157	131	33	229	280
90S	2、4、6、8	140	100	56	24	50	8	20	90	10	165	130	200	0±1.5	4-Φ12	3.5	M8*20	180	176	140	36	245	316
90L	2、4、6、8	140	125	56	24	50	8	20	90	10	165	130	200	0±1.5	4-Φ12	3.5	M8*20	180	176	165	36	245	340
100L	2、4、6、8	160	140	63	28	60	8	24	100	12	215	180	250	0±2	4-Φ15	4	M10*20	198	196	175	38	258	376
112M	2、4、6、8	190	140	70	28	60	8	24	112	12	215	180	250	0±2	4-Φ15	4	M10*25	230	220	170	45	306	400
132S	2、4、6、8	216	140	89	38	80	10	33	132	12	265	230	300	0±2	4-Φ15	4	M12*30	262	258	178	50	340	441
132M	2、4、6、8	216	178	89	38	80	10	33	132	12	265	230	300	0±2	4-Φ15	4	M12*30	262	258	216	50	340	475
160M	2、4、6、8	254	210	108	42	110	12	37	160	15	300	250	350	0±3	4-Φ19	5	M16*36	313	311	256	65	414	610
160L	2、4、6、8	254	254	108	42	110	12	37	160	15	300	250	350	0±3	4-Φ19	5	M16*36	313	311	300	65	414	655
180M	2、4、6、8	279	241	121	48	110	14	42.5	180	15	300	250	350	0±3	4-Φ19	5	M16*36	345	352	300	70	450	690
180L	2、4、6、8	279	279	121	48	110	14	42.5	180	15	300	250	350	0±3	4-Φ19	5	M16*36	345	352	340	70	450	730
200L	2、4、6、8	318	305	133	55	110	16	49	200	19	350	300	400	0±3	4-Φ19	5	M20*42	386	394	355	65	508	760
225S	4、6、8	356	286	149	60	140	18	53	225	19	400	350	450	0±4	8-Φ19	5	M20*40	423	442	360	75	555	810
225M	2	356	311	149	55	110	16	49	225	19	400	350	450	0±4	8-Φ19	5	M20*40	423	442	385	75	555	805
	4、6、8	356	311	149	60	140	18	53	225	19	400	350	450	0±4	8-Φ19	5	M20*40	423	442	385	75	555	835
250M	2	406	349	168	60	140	18	53	250	24	500	450	550	0±4	8-Φ19	5	M20*40	490	481	445	80	615	930
	4、6、8	406	349	168	65	140	18	58	250	24	500	450	550	0±4	8-Φ19	5	M20*42	490	481	445	80	615	930
280S	2	457	368	190	65	140	18	58	280	24	500	450	550	0±4	8-Φ19	5	M20*40	532	543	485	80	675	985
	4、6、8	457	368	190	75	140	20	67.5	280	24	500	450	550	0±4	8-Φ19	5	M20*40	532	543	485	80	675	985
280M	2	457	419	190	65	140	18	58	280	24	500	450	550	0±4	8-Φ19	5	M20*40	532	543	530	80	675	1035
	4、6、8	457	419	190	75	140	20	67.5	280	24	500	450	550	0±4	8-Φ19	5	M20*40	532	543	530	80	675	1035
315S	2	508	406	216	65	140	18	58	315	28	600	550	660	0±4	8-Φ24	6	M20*42	620	616	560	120	845	1190
	4、6、8	508	406	216	80	170	22	71	315	28	600	550	660	0±4	8-Φ24	6	M20*40	620	616	560	120	845	1220
315M	2	508	457	216	65	140	18	58	315	28	600	550	660	0±4	8-Φ24	6	M20*40	620	616	670	120	845	1300
	4、6、8	508	457	216	80	170	22	71	315	28	600	550	660	0±4	8-Φ24	6	M20*40	620	616	670	120	845	1330
315L	2	508	508	216	65	140	18	58	315	28	600	550	660	0±4	8-Φ24	6	M20*40	620	616	670	120	845	1300
	4、6、8	508	508	216	80	170	22	71	315	28	600	550	660	0±4	8-Φ24	6	M20*42	620	616	670	120	845	1330
355M	2	610	560	254	75	140	20	67.5	355	28	740	680	800	0±4	8-Φ24	6	M20*40	725	694	750	112	1000	1525
	4、6、8	610	560	254	95	170	25	86	355	28	740	680	800	0±4	8-Φ24	6	M20*40	725	694	750	112	1000	1555
355L	2	610	630	254	75	140	20	67.5	355	28	740	680	800	0±4	8-Φ24	6	M20*40	725	694	750	112	1000	1525
	4、6、8	610	630	254	95	170	25	86	355	28	740	680	800	0±4	8-Φ24	6	M20*40	725	694	750	112	1000	1555

R=0 distance from flange to shaft shoulder

KRUGER Ventilation Group

THAILAND (Regional Headquarters)
KRUGER VENTILATION INDUSTRIES ASIA CO., LTD.
30/159 Moo 1, Sinsakorn Industrial Estate, Chetsadawithi Road,
Khok Kham, Mueng, Samuthsakorn 74000, Thailand
Tel: +662 1054298 Fax: +662 0248256-9
Email: mktg@krugerventasia.co.th
Website: www.krugerfan.com

INDIA (Haryana)
KRUGER VENTILATION INDUSTRIES (INDIA) PVT. LTD.
Plant-1 :Khasra No. 150/20/2/1, 151/16/2/2,
Village-Rohad, Bahadurgarh, Jajhjar, Haryana - 124507,
India Plant-2 : Khasra No.: 2-0, 14/3, 4-10, 15/1, 6-2, 20
Area: 4 Kanal 4 Marla, Khewat No.: 1007/868,
Khata No.: 1068, Killa No.: 146/6 (7-12, 7/1)
Village Rohad, Bahadurgarh-Rohtak Road,
Bahadurgarh,District Jhajjar - 124507, Haryana, India
Tel: +91 995 8991 652, +91 998 8991 660, +91 858 6966 303
Email: sales.knl@krugerindia.com

INDIA (Mumbai)
KRUGER VENTILATION INDUSTRIES (INDIA) PVT. LTD.
Village-Kalamgaon, Mumbai-Nashik Highway,
Tal-Shahapur, Dist. Thane- 421 601. Maharashtra, India
Tel. : +91 996 0558 899 / 997 5577 211
Fax : +91 2527 240075
E-mail : sales@krugerindia.com

INDIA (Chennai)
KRUGER VENTILATION INDUSTRIES (INDIA) PVT. LTD.
Plot no : E-23/1, Survey no: 279, SIPCOT Industrial Estate,
Rungattukottai, Sriperumbudur Taluk, Tamilnadu - 602117, India
Tel. : +91 978 9982 290
E-mail : giriprabhu@krugerindia.com

MIDDLE EAST
CONTACT : KRUGER VENTILATION INDUSTRIES (INDIA) PVT. LTD.
Tel. : +91 9766323730 / +91 9975577211
Email : rahul@krugerindia.com

MALAYSIA
KRUVENT INDUSTRIES (M) SDN. BHD.
Lot 850, Jalan Subang 7, Taman Perindustrian Subang,
47500, Subang Jaya, Selangor D.E., Malaysia
Tel: +603 80743399 Fax: +603 80743388
Email: mktg@kruger.com.my

INDONESIA
P.T. KRUGER VENTILATION INDONESIA
Jl. Teuku Umar No. 20, Karawaci,
Tangerang 15115, Indonesia
Tel: +62 21-5512288
Fax: +62 21-5513502
Email: mktg@krugerindo.co.id

AUSTRALIA
S&P-KRUGER AUSTRALIA PTY. LTD.
2 Cunningham St, Moorebank N.S.W. 2170
Tel: +612-98227747
Fax: +612-98227757
Email: info@sandpkruger.com.au

VIETNAM
KRUGER VENTILATION INDUSTRIES (VIETNAM) CO., LTD.
Lot A7, 2–4, C2 Road, Thanh Thanh Cong IZ,
Trang Bang District, Tay Ninh Province, Vietnam
Tel: +84-276 3585200/01/02 Fax: +84-276 3585199
Email: mktg@krugervn.com

CHINA (Shanghai)
SHANGHAI KRUGER VENTILATION CO., LTD.
No. 500 Yuanguo Road, Anting, Jiading District,
Shanghai 201814, P.R. China
Tel: +86 21-69573266 Fax: +86 21-69573296
Email: ksh@krugerfan.com.cn
Website: www.krugerfan.com.cn

CHINA (Tianjin)
TIANJIN KRUGER VENTILATION CO., LTD.
Jingjin Science and Technology Park,
Wuqing District, Tianjin 301700, P.R. China
Tel: +86 22-22143480 Fax: +86 22-22143482
Email: ktj@krugerfan.com.cn

CHINA (Guangzhou)
GUANGZHOU KRUGER VENTILATION CO., LTD.
No. 9 Huahui Road, Huashan Town,
Huadu District Guangzhou 510880, P.R. China
Tel: +86 20-66356635 Fax: +86 20-86786001/86786500
Email: kgv@krugerfan.com.cn

CHINA (Wuhan)
WUHAN KRUGER VENTILATION CO., LTD.
No. 805 Huian Avenue, Dongxihu District Wuhan,
Hubei 430040, P.R. China
Tel: +86 27- 83248840
Fax: +86 27- 83261886
Email: kwv@krugerfan.com.cn

HONG KONG
KRUGER VENTILATION (HONG KONG) LIMITED.
Flat E, 8/F, Yeung Yiu Chung (No.8) Industrial Building,
20 Wang Hoi Road, Kowloon Bay, Kowloon, Hong Kong
Tel: +852 22469182 Fax: +852 22469187
Email: info@kruger.com.hk

TAIPEI
KRUGER VENTILATION (TAIWAN) CO., LTD.
No. 157, Ping-an Rd, Hengfeng Village,
Dayuan Shiang Taoyuan County 337, Taiwan
Tel: +886 3-3859119 Fax: +886 3-3859118
Email: sales@krugertwn.com.tw

KOREA
NEOMATE CO., LTD.
80, Seogeunnae-gil, Paltan-myeon, Hwaseong-si,
Gyeonggi-do 18575, Korea
Tel: +82-2-2679-2052 Fax: +82-2-2679-2174
Email: y7890@neomate.co.kr

PHILIPPINES
KRUGER M & E INDUSTRIES CORP.
B3 Welborne Industrial Park, Bancal, Carmona,
Cavite, Philippines 4116
Tel: +63-917-561-9088, +63-917-596-7288,
+63-917-712-8438, +63-917-306-8288 Fax: -
Email: mktg.ph@krugerfan.com

SINGAPORE
KRUGER ENGINEERING PTE. LTD.
2 Venture Drive #20-23, Vision Exchange,
Singapore 608526.
Tel: +65 68631191 Fax: +65 68631151
Email: mktg@krugerfan.com

Kruger Ventilation Industries Asia Co., Ltd.

30/159 Moo 1, Sinsakorn Industrial Estate
Chetsadawithi Road, Khok Kham Mueng,
Samuthsakorn 74000, Thailand
Tel. +662 1054298 - Fax. +662 0248256-9
Website: www.krugerfan.com
CAT077.E0.ED0 December 2025

A member of

Soler&Palau Ventilation Group