KRUGER

LC Series

Belt Drive Sidewall Propeller Fan

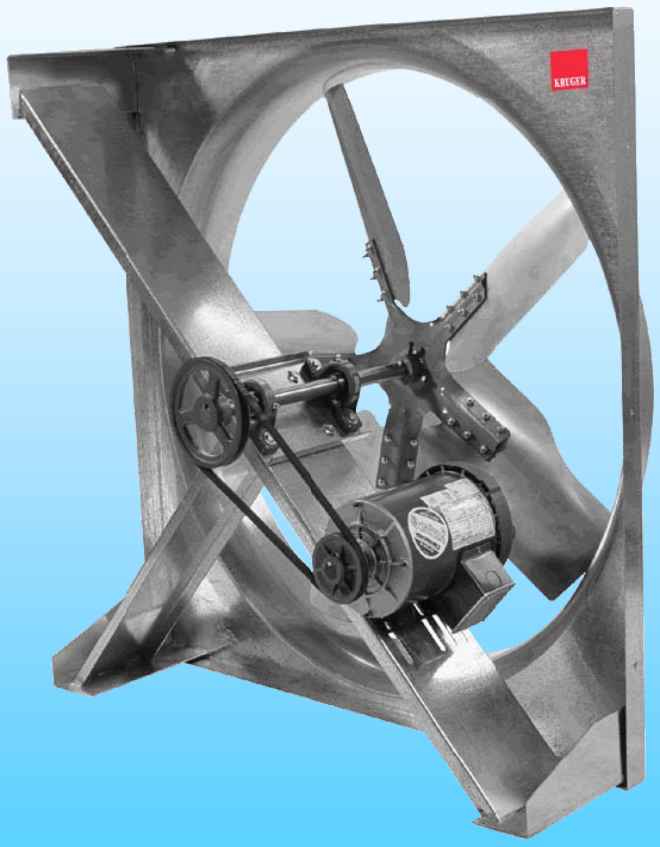

MODELS LCE/LCS

BELT DRIVE SIDEWALL PROPELLER FANS

LINE OVERVIEW

Kruger's Belt Drive Sidewall Propeller Fan line is designed to exhaust or supply large volumes of air at relatively low static pressures. With 3 levels of construction, the belt drive models are for use in a variety of applications for commercial, industrial and agricultural buildings such as manufacturing and assembly plants, warehouses, parking garages, gymnasiums, equipment rooms, distribution centers, foundries, boiler rooms, greenhouses and OEM applications. The direct drive models provide general ventilation for a wide variety of buildings and enclosed areas within buildings. Examples include factories, assembly plants, warehouses, gymnasiums, garages, jails, machine rooms and many others.

These Sidewall Propeller Fans are rated from 3,000 to 40,000 CFM with static pressures to 1" w.g. Models range from 20 to 60". A wide range of accessories are available to meet any need or specifcation.

MODEL COMPARISON

Construction Level		Model	Size Range	Performance	Model Overview On Page
	G90 galvanized steel blades bolted to an epoxy coated hub	LCE LCS	20 to 60"	3,000 to 40,000 CFM up to .625" w.g.	13

MOUNTING ARRANGEMENT OPTIONS

Page	Mounting Arrangement		Description
2-3	**Wall Housing**	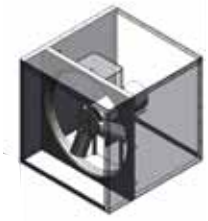	Heavy-gauge, all galvanized G-90 steel housing provides a simple solution to installing a fan and all required accessories in a rough wall opening. It can be used in exhaust or supply applications and in fan sizes 20 through 60 inch.
4-5	**Filtered Wall Housing**		For installations where filtering is required. Heavy-gauge, all galvanized G-90 steel filtered wall housings are available in both supply and exhaust configurations. They are available in eight (8) sizes for fans ranging from size 20 to 60 inches. They are designed with the draw-thru concept to achieve the highest filter and fan efficiencies.
6	**Wall Collar**		Heavy-gauge, all G-90 galvanized mounting collar provides a simple solution to installing a fan in a rough wall opening when a rear safety guard is **NOT** required.

WALL HOUSING MOUNTING OPTION

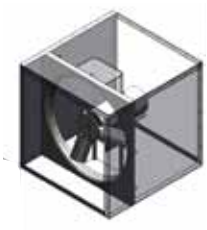

This heavy-gauge, all galvanized G-90 steel housing provides a simple solution to installing a fan and all required accessories in a rough wall opening. It can be used in exhaust or supply applications and in fan sizes 20 through 60 inch. Depending on space and maintenance requirements, the wall housing may be installed inward or outwards of the building. All housings ship assembled with the fan to lessen job site installation costs. Wire guards, shutters and/or rainhoods may be attached to the prepunched flange. We strongly recommend rainhoods and motorized shutters for all supply applications and whenever additional weather protection is desired.

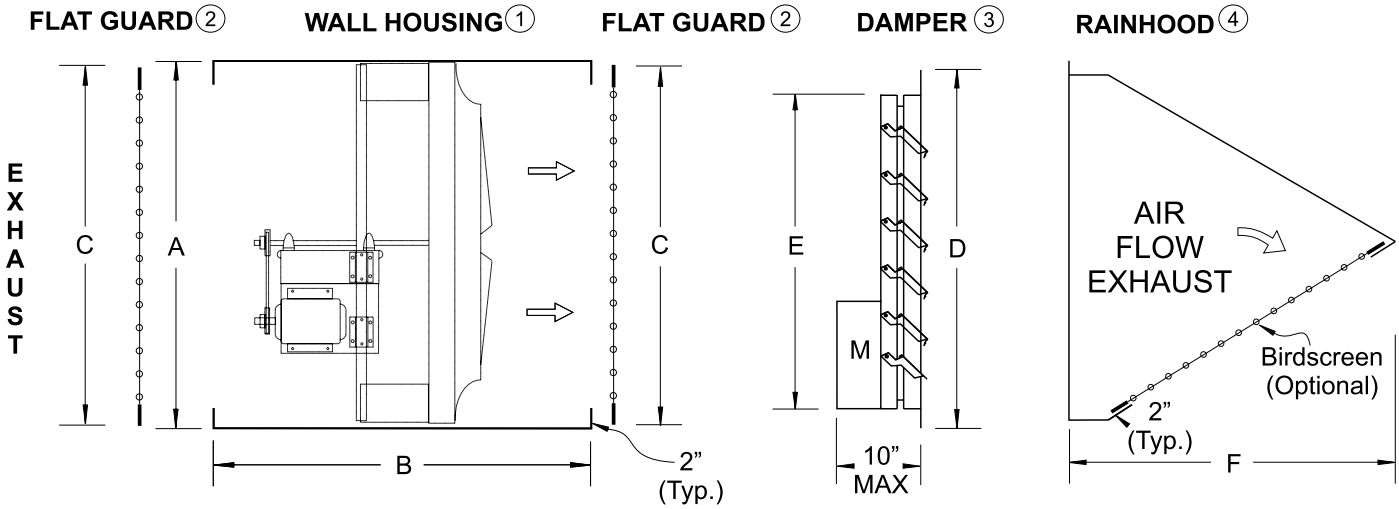

Fan Size	Wall Housing ① A (Sq.) O.D	Wall Housing ① B Length Exh/Sup LC	Minimum Wall Opening (Sq)	Flat Guard ② C (Sq)	Damper ③ D (O.D)	Damper ③ E	Exhaust Optional Rainhood 45 Deg. ④ F	Supply Required Rainhood 90 Deg. ⑤ F
20	25	44	25 1/2	24	22 1/2	20	24 1/4	27 3/4
24	31	44	31 1/2	30	28 1/2	26	28 1/2	38 1/2
30	37	44	37 1/2	36	34 1/2	32	34 1/2	44 1/2
36	43	44	43 1/2	42	40 1/2	38	40 1/2	49
42	49	44	49 1/2	48	46 1/2	44	46 1/2	56 1/2
48	55	44	55 1/2	54	52 1/2	50	49 1/2	62 1/2
54	61	44	61 1/2	60	58 1/2	56	58 1/2	73
60	67	44	67 1/2	66	64 1/2	62	64 1/2	73

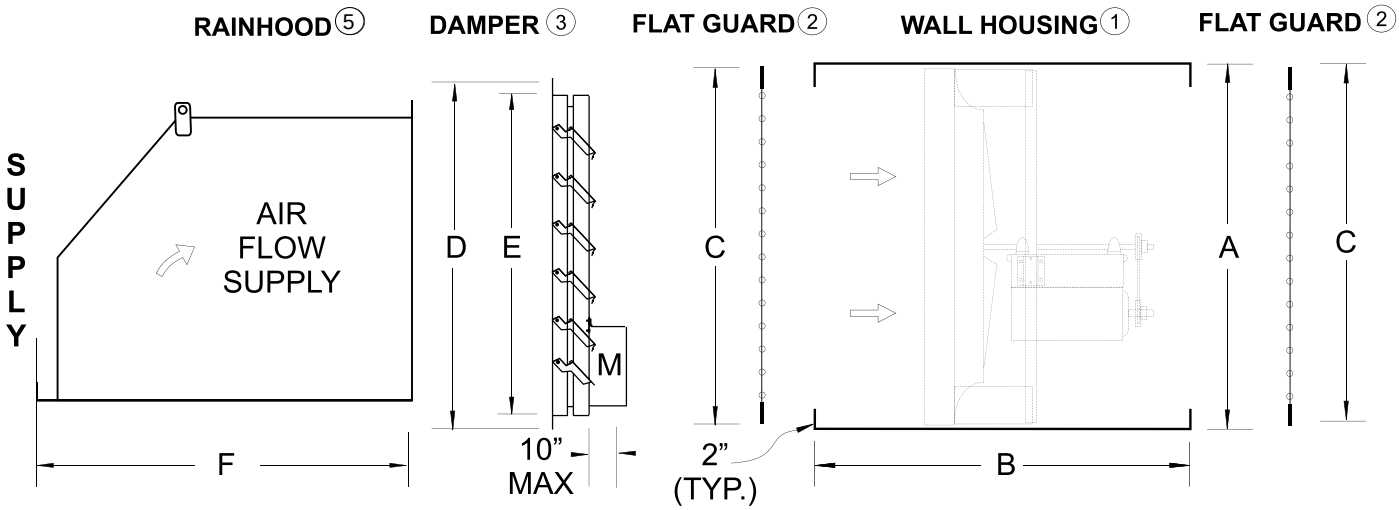

Rainhood recommended for supply applications.

WALL HOUSING STANDARD MOUNTING ARRANGEMENTS

The most common mounting arrangement (below left) leaves a clean building exterior and allows access to the fan, motor and drives from inside the building. Additional bracing angle, rod or cable (field provided) should be used in addition to the mounting angles to support the fan and wall housing assembly.

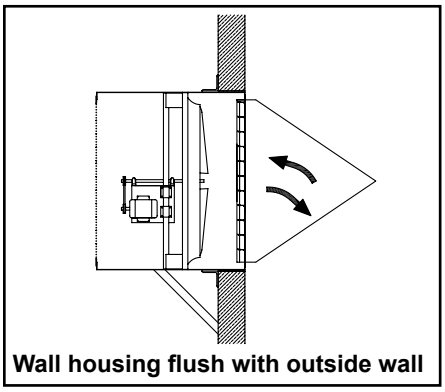

Wall housing flush with outside wall

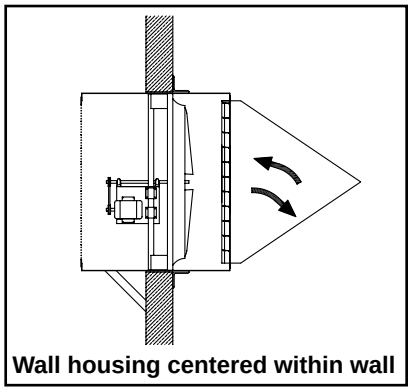

Wall housing centered within wall

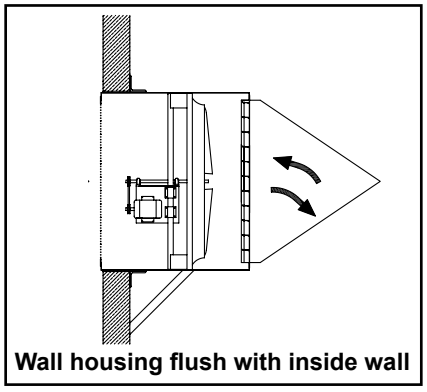

Wall housing flush with inside wall

NOTE: Supply applications have the fan venturi spun on the opposite side of the fans shown above. The fans shown are exhaust. Rainhoods are required on supply applications and recommended on exhaust applications where additional weather protection is desired. Exhaust and/or supply fans installed as shown should be serviced from the interior of the building. Where service is required from the exterior of the building, consult the factory or representative for recommendations. All bracing shown is field provided. Field flashing and caulking of wall housing seams and unused mounting holes, will ensure a weather resistant installation.

PRESSURE LOSS GUIDE FOR WALL HOUSING ACCESSORIES

Use the estimated pressure drop graphs to help select the proper exhaust or supply fan package that will deliver the desired airflow. Enter the graph from the bottom at the specified CFM and move vertically upward to the fan curve for the desired fan size, then horizontally to the left and read the estimated static pressure drop resulting from these typical accessory packages. Add the accessory pressure loss to the system (or building) design static pressure loss to obtain the total static pressure loss to be used for the proper fan selection.

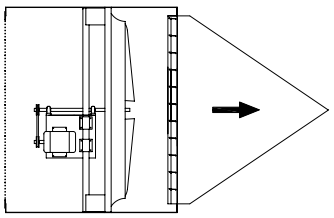

Exhaust Airflow
with Wall Housing
Gravity Damper
Rainhood
Motorside Guard

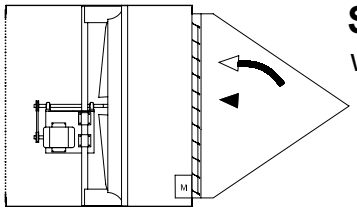

Supply Airflow
with Wall Housing
Gravity Damper
Rainhood
Motorside Guard

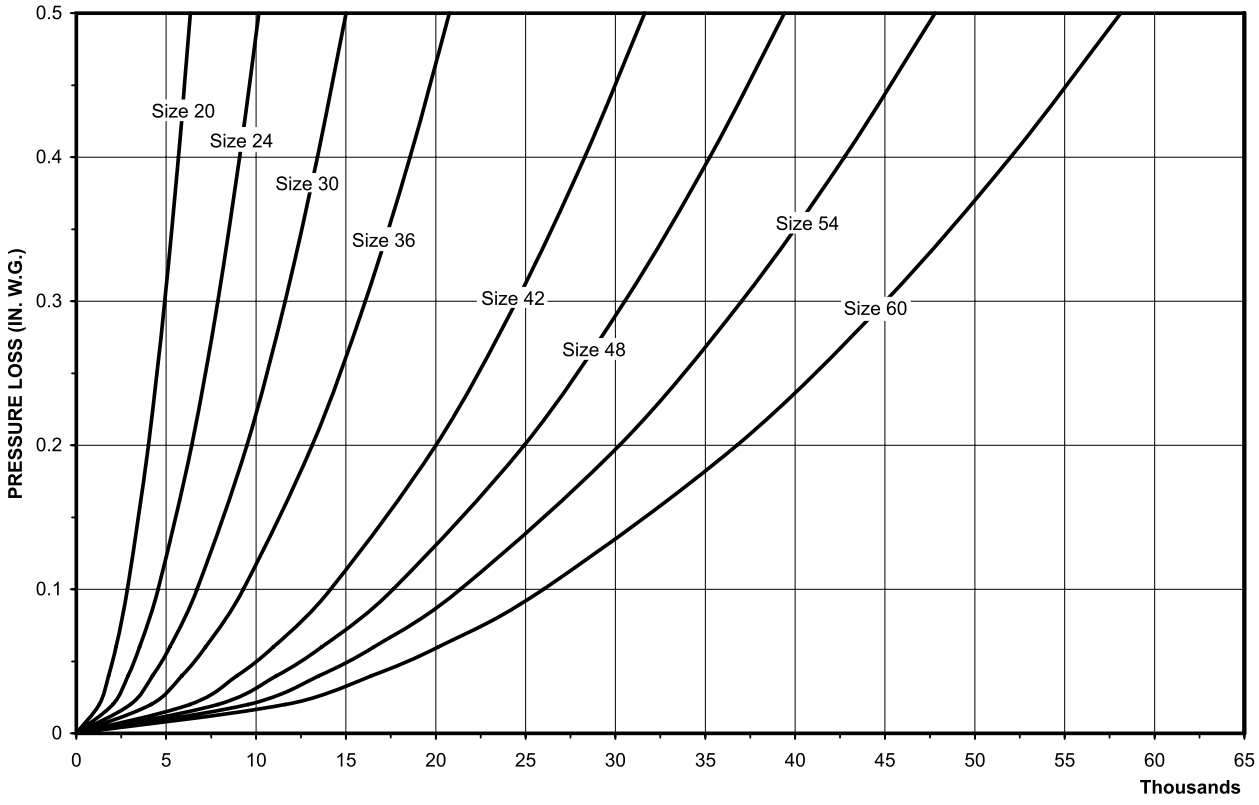

FILTERED WALL HOUSING MOUNTING OPTIONS

Filtered wall housings are available in both supply and exhaust configurations. They are available in eight (8) sizes for fans ranging from size 20 to 60 inches. They are designed with the draw-thru concept to achieve the highest filter and fan efficiencies.

Standard construction is galvanized steel. Mounting flanges are factory installed for either flush exterior or flush interior. Permanent 2-inch (51 mm) washable filters are accessed through a bolted or hinged panel and can be easily removed for cleaning.

Filtered Supply

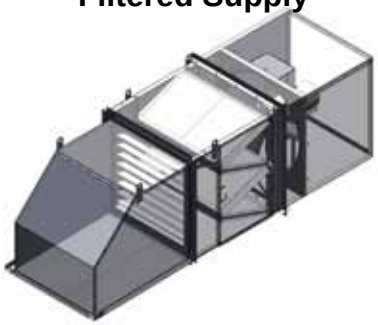

Filtered Exhaust



FILTERED SUPPLY WALL HOUSING

Standard Features and Options

1. **Wall Housing Box (Standard)**

2. **Filter Box (Standard)**
   - Bolted or Hinged Door
   - Includes 2 sets of flanges for mounting filter box to wall housing.

3. **Wall Mount Flanges (Standard)**
   - Set of 4 - shipped loose

4. **Damper (Optional)**
   - Supply Type
   - Gravity, Motorized, or Center Pivot

5. **Rain Hood (Optional)**
   - 90 Degree - Supply Type

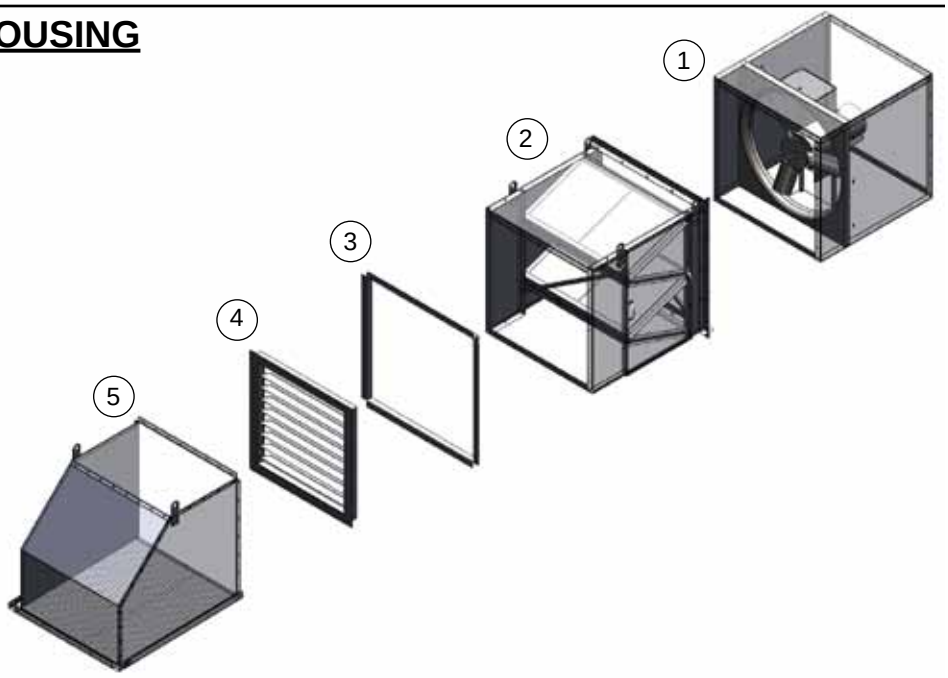

FILTERED EXHAUST WALL HOUSING

Standard Features and Options

1. **Wall Housing Box (Standard)**

2. **Filter Box (Standard)**
   - Bolted or Hinged Door
   - Includes 2 sets of flanges for mounting filter box to wall housing.

3. **Wall Mount Flanges (Standard)**
   - 1 set of 4 - shipped loose

4. **Damper (Optional)**
   - Exhaust Type
   - Gravity, Motorized, or Center Pivot

5. **Rain Hood (Optional)**
   - 45 Degree - Exhaust Type

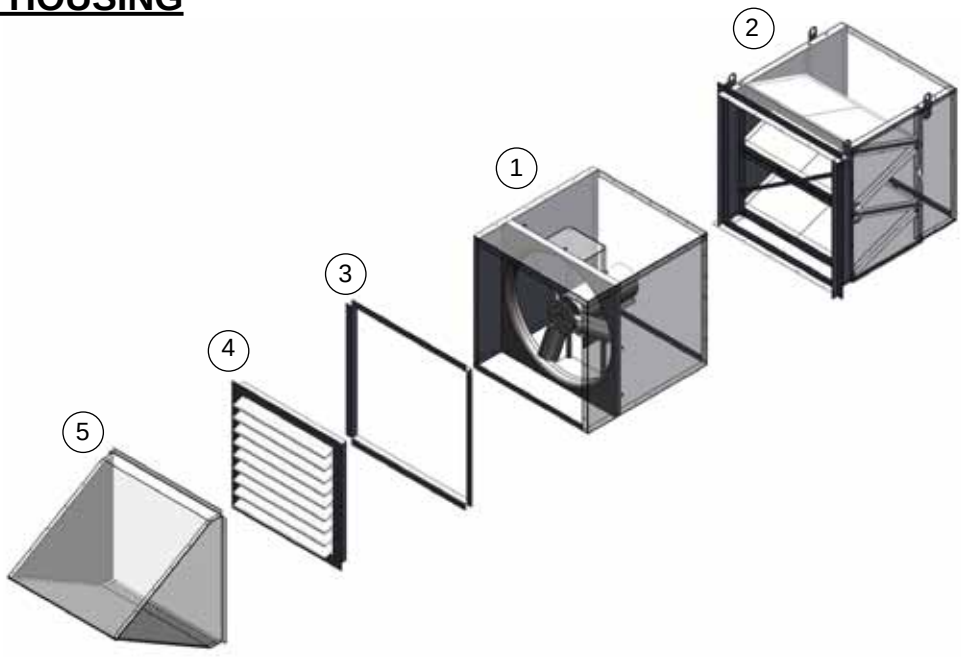

FILTERED WALL HOUSING MOUNTING OPTIONS Cont.

Filtered Wall Housing Dimensions

Filtered Supply

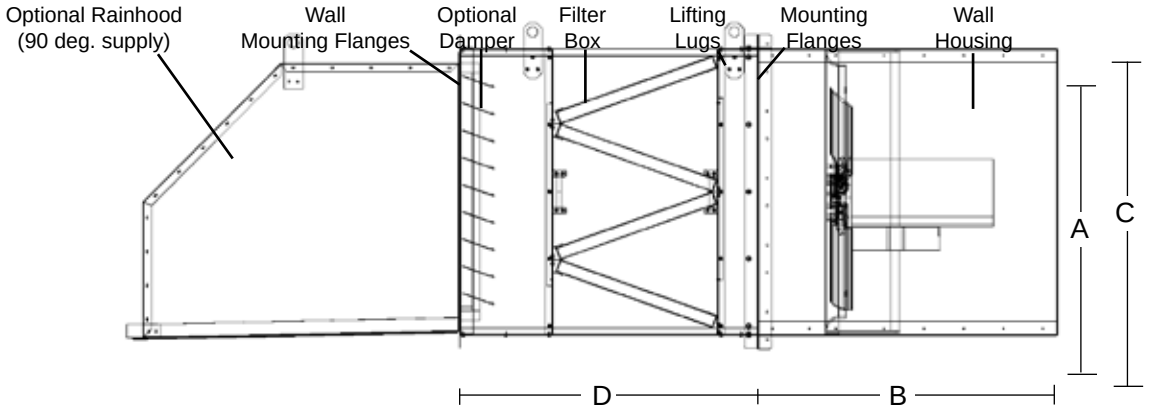

Fan Size	Wall Housing		Minimum Wall Opening	Filter Box			
	A	B Length LC	Sq	C	D	# of Filters	Filter Actual Dimensions
20	25	44	25 1/2	25	44 1/8	3	19 5/8 x 24 5/8 x 1 7/8
24	31	44	31 1/2	31	41 1/8	4	19 5/8 x 24 5/8 x 1 7/8
30	37	44	37 1/2	37	44 1/8	8	15 5/8 x 24 5/8 x 1 7/8
36	43	44	43 1/2	43	44 1/8	8	19 5/8 x 24 5/8 x 1 7/8
42	49	44	49 1/2	49	44 1/8	10	19 5/8 x 24 5/8 x 1 7/8
48	55	44	55 1/2	55	40 1/2	12	19 5/8 x 24 5/8 x 1 7/8
54	61	44	61 1/2	61	44 1/8	15	19 5/8 x 24 5/8 x 1 7/8
60	67	44	67 1/2	67	44 1/8	15	19 5/8 x 24 5/8 x 1 7/8

Filtered Exhaust

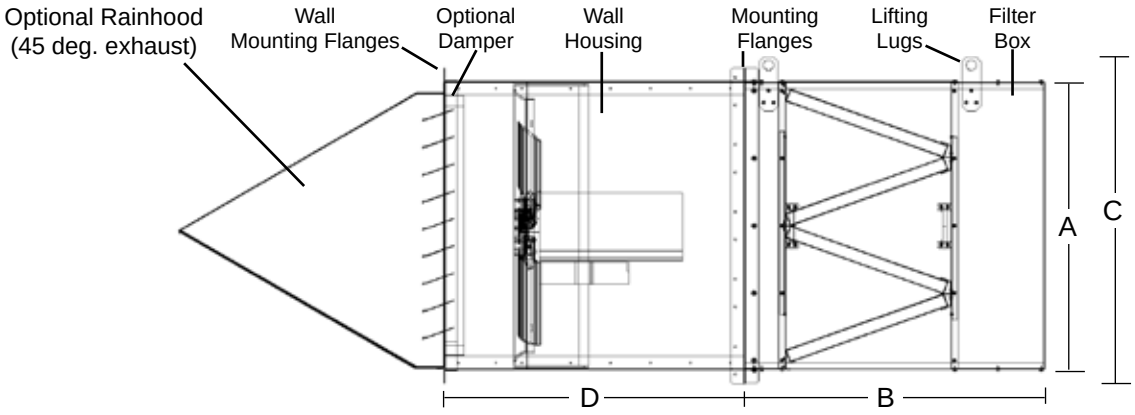

PRESSURE LOSS GUIDE FOR FILTER BOX

Use the estimated pressure drop graphs to help select the proper exhaust or supply fan that will deliver the desired airflow. Enter the graph from the bottom at the specified CFM and move vertically upward to the fan curve for the desired size, then horizontally to the left and read the estimated static pressure drop resulting from these typical accessory packages. Add the accessory pressure loss to the system (or building) design static pressure loss to obtain the total static pressure loss to be used for the proper fan selection.

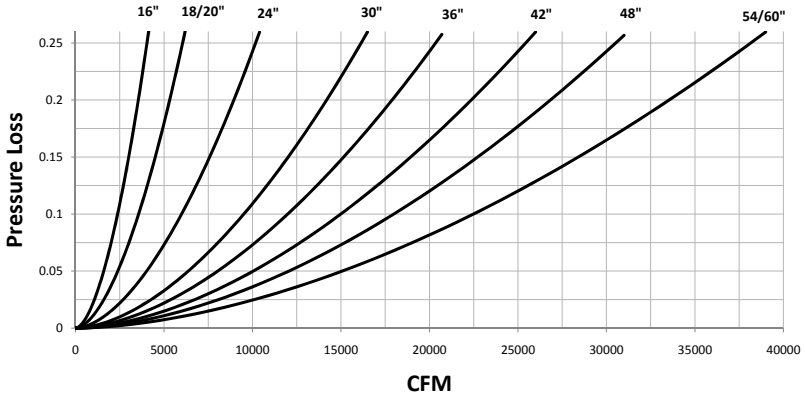

WALL COLLAR MOUNTING OPTION

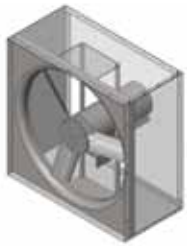

The heavy-gauge, all G-90 galvanized mounting collar provides a simple solution to installing a fan in a rough wall opening when a rear safety guard is **NOT** required. A front wire guard, shutter, and/or rainhood can be attached to the front prepunched flanges. The wall collar can be used in exhaust or supply applications for all fan sizes. The wall collar is mounted with the fan on the interior side of the building. All collars ship fully assembled with the fan to lessen jobsite installation costs. We strongly recommend rainhoods and motorized shutter for all supply applications as well as for exhaust applications where additional weather protection is desired.

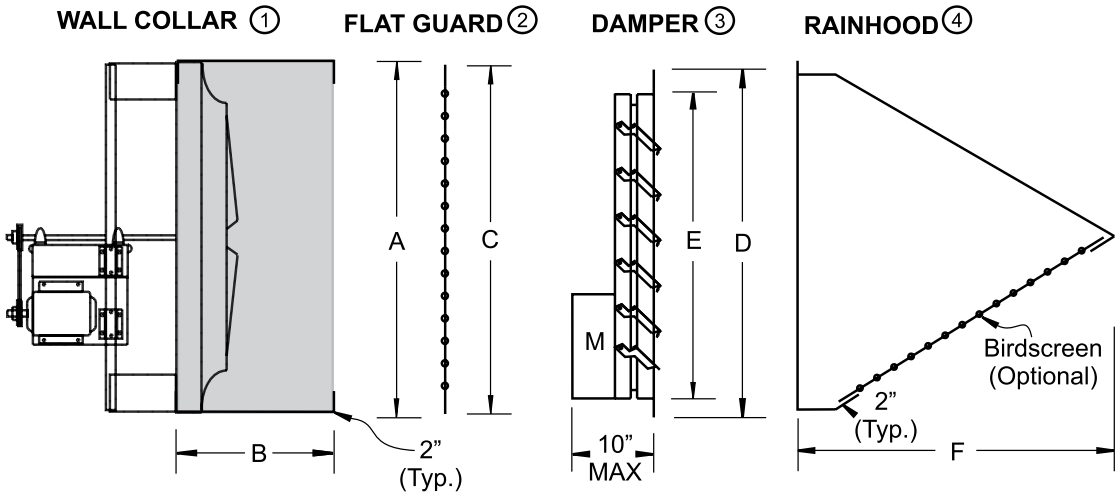

Dimensions

Fan Size	Wall Collar ①		Minimum Wall Opening	Flat Guard ②	Damper ③		Rainhood ④
	A	B	Sq	C	D (O.D)	E	F
20	24 1/4	21	25 1/2	24	22 1/2	20	24 1/4
24	30 1/4	21	31 1/2	30	28 1/2	26	28 1/2
30	36 1/4	21	37 1/2	36	34 1/2	32	34 1/2
36	42 1/4	21	43 1/2	42	40 1/2	38	40 1/2
42	48 1/8	21	49 1/2	48	46 1/2	44	46 1/2
48	54 1/8	21	55 1/2	54	52 1/2	50	49 1/2
54	60 1/8	21	61 1/2	60	58 1/2	56	58 1/2
60	66 1/8	21	67 1/2	66	64 1/2	62	64 1/2

Unless shown otherwise supply and exhaust dimensions are similar.

ACCESSORIES & OPTIONS
FOR MOUNTING ARRANGEMENTS

Accessory or Option	
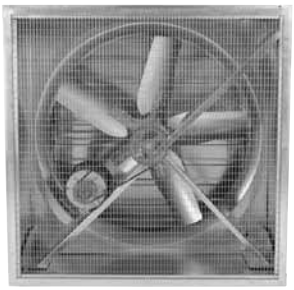	**Safety Guards** Safety Guards (Standard or Heavy-Duty Flat Guards) are strongly recommended to protect personnel from accidental injury and to prevent debris from entering the fan. OSHA approved guards are required in many installations including when the fans are within 7 feet of the floor or work/access area.
	**Rainhoods or Weatherhoods** Designed to provide additional weather protection by partially shielding the wall opening and should be used for all supply applications and whenever additional weather resistance is desired. The galvanized (aluminum optional) hood attaches to the wall housing or wall collar flanges. Field flashing and caulking will reduce moisture penetration. Shown with optional birdscreen.
	**Dampers** Used alone or in conjunction with the wall housing or wall collar, a complete line of dampers are available for exhaust or supply configurations.

ACCESSORIES & OPTIONS
FOR MOUNTING ARRANGEMENTS Cont.

Safety Guards

Safety guards are strongly recommended to protect personnel from accidental injury and to prevent debris from entering the fan. OSHA approved guards are required in many installations including when the fans are within 7 feet of the floor or work/access area.

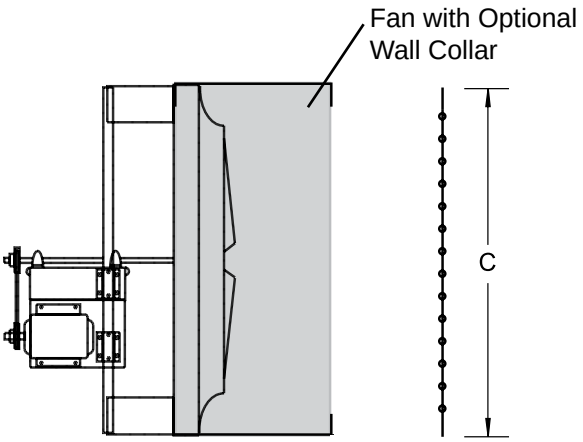

Dimensions

Fan Size	C
20	24
24	30
30	36
36	42
42	48
48	54
54	60
60	66

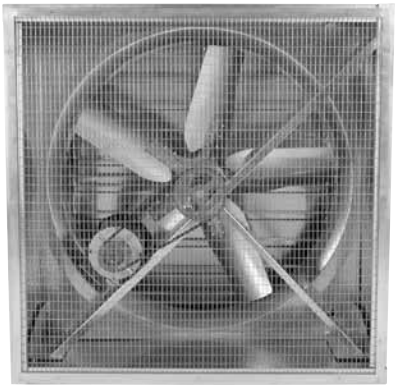

Standard Duty Flat Wire Guard
The removable safety guard satisfies OSHA requirements when used with the optional wall housing as a motor-side (rear) guard. The 16 ga. 1/2" X 1" welded wire mesh is mounted in a galvanized frame and attaches to the inward flanges of the wall housing.



Heavy-Duty Flat Wire Guard
The removable safety guard satisfies OSHA requirements when used with the optional wall housing as a motor-side (rear) guard. The H.D. expanded aluminum mesh is mounted in a galvanized frame and attaches to the inward flanges of the wall housing.

ACCESSORIES & OPTIONS
FOR MOUNTING ARRANGEMENTS Cont.

Rainhoods or Weatherhoods

Designed to provide additional weather protection by partially shielding the wall opening and should be used for all supply applications and whenever additional weather resistance is desired. The galvanized (aluminum optional) hood attaches to the wall housing or wall collar flanges. Field flashing and caulking will reduce moisture penetration. Shown with optional birdscreen.



45 Degree Exhaust

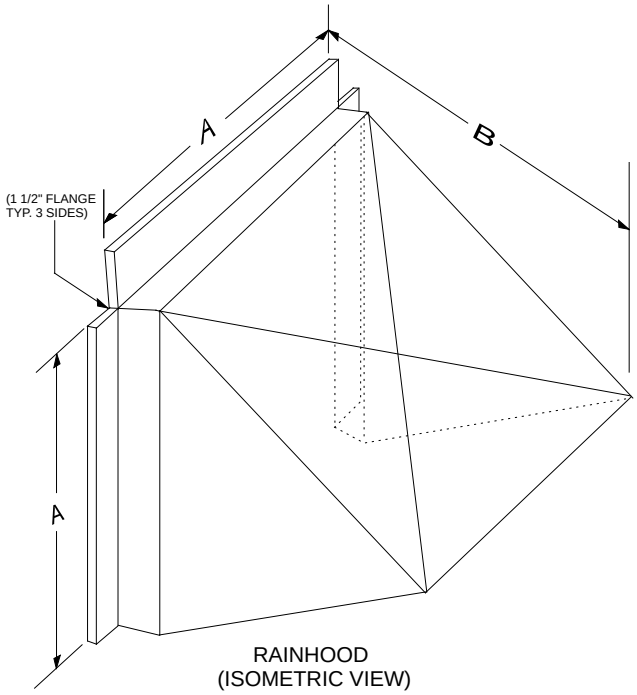

RAINHOOD
(ISOMETRIC VIEW)

Fan Size	A	B	GAUGE (2)	AVG. WT.
20	22	24-1/4	18	25
24	28	28-1/2	18	30
30	34	34-1/2	18	40
36	40	40-1/2	18	50
42	46	46-1/2	18	60
48	52	49-1/2	16	70
54	58	58-1/2	16	120
60	64	64-1/2	16	175

90 Degree Supply

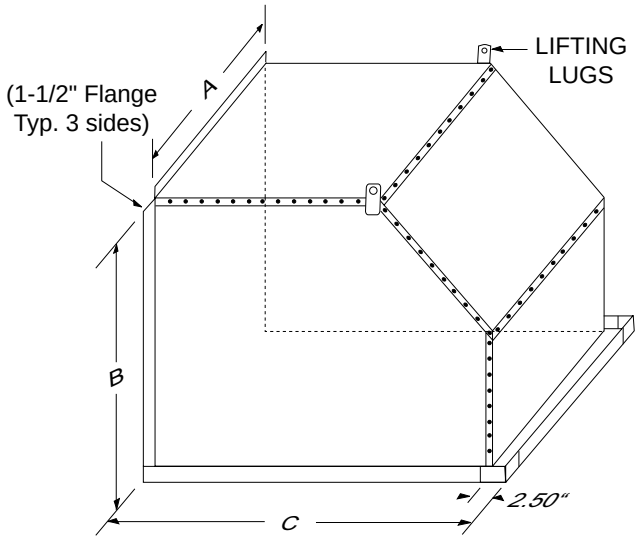

Fan Size	A	B	C	GAUGE (2)	AVG. WT.
20	22	22	27-3/4	18	25
24	27-1/4	26-1/2	38-1/2	18	30
30	32-1/2	33-1/2	44-1/2	18	40
36	38-1/2	39-1/4	49	18	50
42	44-1/2	45-1/4	56-1/2	18	60
48	50-1/2	51-1/2	62-1/2	18	70
54	56-3/4	57	73	18	120
60	62-3/4	63	73	18	175

ACCESSORIES & OPTIONS
FOR MOUNTING ARRANGEMENTS Cont.

Damper Types (Shutters)

Heavy-Duty Galvanized Exhaust Motorized Shutter



This damper has a flanged frame and is designed to fit the inside flanges of the optional wall housing or wall mounting collar. The frame and blades are constructed of galvanized steel and are rated to 3000 FPM with proper clearance as provided by all factory accessories. The damper body recesses into the opening for a flush appearance.

Standard Duty Aluminum Exhaust Gravity Shutter



This damper can greatly reduce the infiltration of outside air and although not completely watertight, will provide weather protection in an economical fashion. Constructed with a galvanized frame and aluminum blades this damper is rated to 2000 FPM with the proper clearance as provided by all factory accessories. The damper body is recessed into the opening for a flush appearance.

Heavy-Duty Galvanized Supply Motorized Shutter



The motorized option improves weather protection by providing a tighter closure seal and is recommended for all supply applications. Heavy-duty dampers are constructed with galvanized frames and blades and are rated to 3000 FPM. The damper body is not recessed providing extra clearance between the fan and damper blades.

Standard Duty Aluminum Supply Motorized Shutter



The motorized option improves weather protection by providing a tighter closure seal and is recommended for all supply applications. Standard duty dampers are constructed with galvanized frames and aluminum blades and are rated to 2000 FPM. The damper body is not recessed providing extra clearance between the fan and damper blades.

Center Pivot Motorized Damper - Supply or Exhaust



The flanged frame damper is designed to recess inside the flanges of the optional wall housing or wall mounting collar. The center pivot style damper provides superior weather resistance. Galvanized (optional aluminum) construction is rated to 3500 FPM with proper clearance as provided by all factory accessories.

Electric Damper Operators

Electric damper operators provide more positive open and closed damper positions which helps increase weather resistance. Power open - spring close (POSC) motor and linkage kits are field installed (except for center pivot style) and are available in 24, 120/240, or 460 volts (single phase) and require approximately 0.5 amps at 120/1/60 power supply. Transformers are available for voltage reduction. For fan motors 5HP and larger, we recommend a factory tilt switch or "delay-on" timer in the control circuit (by others) to allow the damper to open prior to allowing fan operation, which will protect the damper blades and fan from damage when the fan is first energized.

ACCESSORIES & OPTIONS
FOR MOUNTING ARRANGEMENTS Cont.

Dimensions (Standard and Heavy-Duty Dampers)

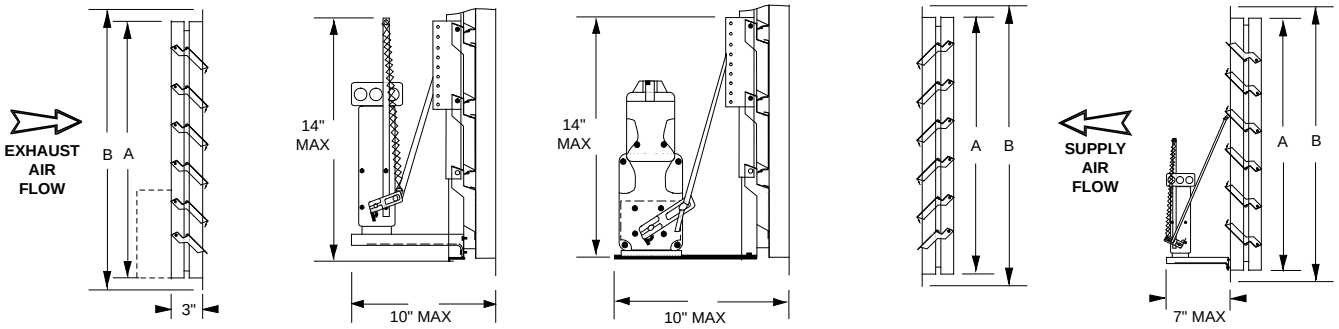

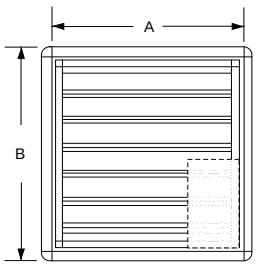

DETAIL #1

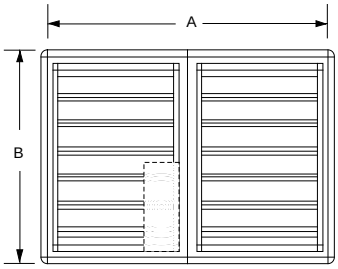

DETAIL #2

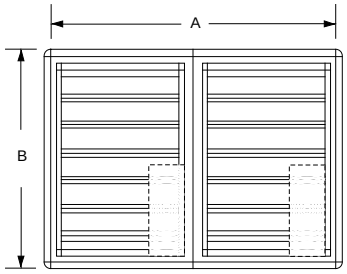

DETAIL #3

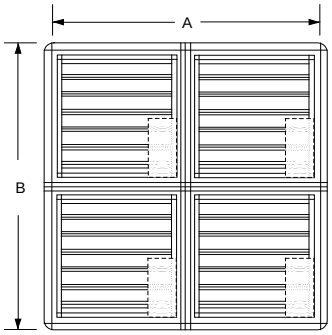

DETAIL #4

Fan Size	A Sq. Size	B Sq. OD Flange	Panels (Detail)	Motor Type			
				Exhaust		Supply	
				Type	Qty	Type	Qty
20	20	22 1/2	1	MP-2781	1	MP-2781-S	1
24	26	28 1/2	1	MP-2781	1	MP-2781-S	1
30	32	34 1/2	1	MP-2781	1	MA-220-S	1
36	38	40 1/2	1	MA-220	1	MA-220-S	1
42	44	46 1/2	2	MA-220	1	MA-220-S	2
48	50	52 1/2	2	MA-220	1	MA-220-S	2
54	56	58 1/2	3	MA-220	2	MA-220-S	2
60	62	64 1/2	3	MA-220	2	MA-220-S	2

Heavy Duty Dampers required on all units with 7 1/2HP motors and above.

Dimensions (Center Pivot Motorized Damper)

Fan Size	Opening Required	A O.D.	B (1)	C "Size"	D (Center of Holes)	# of Panels	G	
							Closed (E-1)	Open (E-2)
24	27	29	24-1/2	26	-	1 x 1	7-1/4	8-1/2
30	33	35	30-1/2	32	-	1 x 1	10-1/4	13-3/4
36	39	41	36-1/2	38	19-1/2	1 x 1	10-1/4	13-3/4
42	45	47	42-1/2	44	22-1/2	1 x 1	10-1/4	13-3/4
48	51	53	48-1/2	50	25-1/2	2 x 1	10-1/4	13-3/4
54	57	59	54-1/2	56	28-1/2	2 x 1	10-1/4	12-3/4
60	63	65	60-1/2	62	31-1/2	2 x 1	10-1/4	12-3/4

Fan Size	Motor (2)		
	Power Supply	Max Amps	Stall Torque (in. lbs)
24-48	120-240V 60Hz	0.3/0.6	25
54-60	240V 60Hz	0.5	60

(1) Minimum opening to clear pins.
(2) Motor is 60 Hz, single phase continuous duty with 104ºF (40ºC), maximum ambient temperature

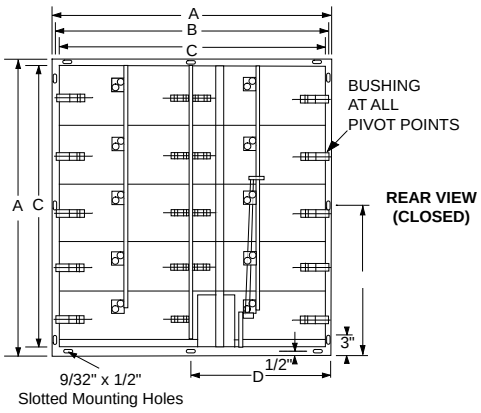

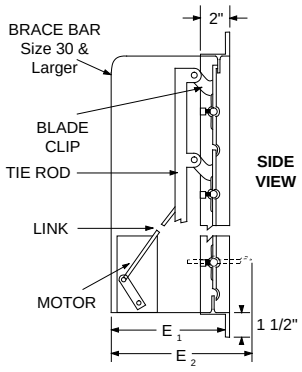

ACCESSORIES & OPTIONS

Electrical Accessories are available to simplify the installation and reduce the total project cost.

Disconnect Switches can be shipped loose or factory mounted and wired (except explosion proof and two speed) in NEMA 1, 3R, 4X, or other enclosures. Two-speed and explosion proof disconnects are available but may be subject to more stringent code requirements. It is the responsibility of the buyer and the installer to comply with all local and national codes.

Aluminum Construction is available for most models and typically includes propeller blades, fan panel, motor and drive support (large frame motors may have steel reinforcement) and accessories. When an explosion proof motor is specified, aluminum fan construction must be used for additional spark resistance.

cULus705 or UL705 Listing is available for sidewall propeller fans with most motors and should be specified for electrical safety and reliability.

Extended Lube Lines provide convenient access for routine bearing lubrication. Lubrication lines are installed from the fan shaft bearings to the exterior of the wall housing or sheet metal motorside guard and are provided with zerk fittings.

Paints and Coatings for protective and decorative purposes. Available coatings include: Epoxy, Synthetic Resin, and Heresite (air-dried phenolic). Contact your Soler & Palau representative or the factory for more information on available coatings and colors.

Mounting Angles facilitate the installation and a secure attachment of the wall housing or wall collar into the framed wall opening. Galvanized or aluminum angles are available and are pre-cut to the proper length. Additional bracing, mounting hardware, flashing and caulking are typically provided by the installer.

Factory Wiring can simplify jobsite installation and reduce the overall project cost. Optional services include wiring of motor, disconnect switch, damper actuator, and other custom controls. Please note that some wiring options may not be available in conjunction with the cULus705 and UL705 listing option (for example explosion proof, two speed and special motors).

MODEL LC - CONSTRUCTION LEVEL 1

Application

Model LCE (exhaust) and LCS (supply) are high capacity belt driven propeller fans rated from 3,000 to 40,000 cfm to .625" w.g. static pressure. Their primary application is the exhaust or supply of large volumes of air at relatively low static pressures from commercial, light industrial and agricultural buildings such as manufacturing and assembly plants, warehouses, parking garages, gymnasiums, equipment rooms, distribution centers, poultry and greenhouses.

Wall mounting provides an easy, economical installation. Belt driven fans provide large volumes of air at low fan speeds and low noise levels and afford quick, easy performance adjustments. All necessary accessories are available to meet any need or specification.

When suspended from the ceiling, thus keeping floor spaces open, model LC can be installed to direct large volumes of air downward toward work centers improving employee comfort and productivity.

When mounted in portable housings with OSHA guards, Model LC-P can be used as a mancooler and rolled to hot spots to provide needed employee relief from heat or fumes and help increase productivity.

Construction/Specification Checklist

Belt Drive, Wall Exhaust (or Supply) Propeller Fan shall be provided as follows:

CERTIFICATIONS: Fans shall be AMCA Licensed for air and sound performance. Fans shall be UL and CUL 705 listed for electrical safety and reliability (Optional).

PANEL ASSEMBLY: Panels shall be heavy-gauge G90 galvanized (optional aluminum) with spun one piece venturi. Motor and bearing plate shall be a minimum of 12 gauge galvanized steel except size 20. Panel end support frame assembly shall be of welded, not bolted, construction with prepunched mounting holes for easy installation.

PROPELLER: Blades shall be die formed galvanized G90 steel of minimum 16 gauge. Blades shall be bolted to an epoxy coated hub which is keyed to the fan shaft. Propeller assembly shall be statically balanced.

DRIVES: All sheaves shall be sized to a minimum 150% of driven horsepower, machined cast iron adjustable pitch through 3 horsepower, keyed to both the motor and fan shaft. Fan shaft shall be precision turned, ground and polished steel. Belts shall be nonstatic oil and heat resistant V-belts.

BEARINGS: All bearings shall be self-aligning cast iron pillow block type with relube fitting and of the air handling design. Bearing design shall be for a minimum of L-50 200,000 hour average life.

MOTORS: Permanently sealed ball bearing type furnished to the specified voltage, phase and enclosure. All motors shall be mounted and factory run tested.

Fan Size	Material (Ga. or inches)					Shaft Diameter (in.)	Max Motor Frame Size	Avg. Weight (lbs.)
	Fan Panel	Drive Frame	Motor & Bearing Supports	Propeller				
				Spider	Blade			
				Steel	Steel			
20	18	16	16	14	18	3/4	56H	85
24	16	12	12	10	16	1	145T	90
30	16	12	12	10	16	1	145T	100
36	16	12	12	7	16	1	145T	105
42	16	12	12	7	14	1	145T	110
48	16	12	12	7	14	1	145T	125
54	14	12	12	1/4	12	1 3/16	182T	240
60	14	12	12	1/4	12	1 3/16	182T	285

Motor Service Factor

Motor service factors are utilized in some performance selections shown. This is a safe and common industry practice that provides more performance for the investment. BHP is shown at the maximum catalog performance point. BHP at all other static pressures listed is less than that shown, in most cases substantially less. Because the motors are in the air stream there are no negative effects on motor life. 2 speed motor applications are recommended at or below their nominal BHP levels. If desired, pick the next higher horsepower to eliminate this service factor usage. Refer to the Optisizer Fan Selection Program for actual BHP at any performance point.

DIMENSIONS

Fan Size	A Sq	B	C	D	E	F	Damper O.D. Sq Flange
20	24	2	5	1 1/4	15	23	22 1/2
24	30	2	7 1/2	1 1/4	15	23	28 1/2
30	36	2	7 1/2	1 1/4	15	24	34 1/2
36	42	2	7 1/2	1 1/4	15	24	40 1/2
42	48	2	7 1/2	1 1/4	16	24	46 1/2
48	54	2	7 1/2	1 1/4	16	24	52 1/2
54	60	2	7 1/2	1 1/4	20	26	58 1/2
60	66	2	7 1/2	1 1/4	20	26	64 1/2

Dimensions shown in inches.

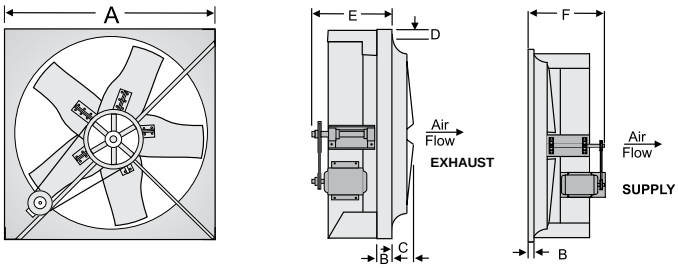

1 year fan housing warranty, 1 year motor warranty

PERFORMANCE

Model LC
Size 20

Limits			Panel OD Square	Min. Wall Opening	Damper OD	Approx. Wt
Model	RPM	Motor Frame				
LC	1350	56H	24	25 1/2	22 1/2	85

Kruger Ventilation Industries Asia Co., Ltd certifies that the models shown herein are licensed to bear the AMCA Seal. The ratings shown are based on test and procedures performed in accordance with AMCA Publication 211 and AMCA Publication 311 and comply with the requirement of the AMCA Certified Ratings Program.

	Size	Motor HP	Max BHP	Fan RPM	Sones (0.00" SP)	Static Pressure (Inches W.G)								
						.000	.100	.125	.150	.200	.250	.300	.375	.500
Level 1 Construction	Model LC 20		0.25	905	10.5	3774	3364	3247	3113	-	-	-	-	-
			0.27	920	10.8	3837	3435	3321	3193	2829	-	-	-	-
		1/4	0.28	930	11.0	3879	3482	3370	3246	2900	-	-	-	-
			0.29	945	11.3	3941	3553	3442	3324	3002	-	-	-	-
			0.30	955	11.5	3983	3600	3491	3375	3067	-	-	-	-
			0.33	990	12.2	4129	3762	3658	3550	3283	-	-	-	-
			0.34	1000	12.5	4171	3809	3706	3599	3341	-	-	-	-
		1/3	0.36	1015	12.8	4233	3878	3776	3673	3428	-	-	-	-
			0.38	1030	13.1	4296	3947	3847	3746	3512	3173	-	-	-
			0.40	1050	13.5	4379	4038	3941	3842	3621	3312	-	-	-
			0.47	1110	14.8	4629	4311	4221	4128	3933	3689	-	-	-
			0.50	1125	15.1	4692	4378	4291	4199	4009	3776	3452	-	-
		1/2	0.55	1145	15.5	4775	4468	4383	4293	4108	3890	3593	2783	-
			0.57	1160	15.9	4838	4536	4451	4364	4182	3973	3694	2959	-
			0.60	1180	16.4	4921	4625	4543	4457	4280	4081	3822	3182	-
			0.70	1260	18.3	5255	4981	4905	4827	4664	4493	4293	3875	-
			0.75	1295	19.1	5401	5135	5062	4987	4829	4666	4484	4117	-
		3/4	0.79	1320	19.7	5505	5245	5174	5101	4947	4788	4616	4278	-
			0.82	1335	20	5568	5311	5241	5169	5018	4861	4693	4371	-
			0.90	1350	20	5630	5377	5308	5237	5088	4934	4770	4462	3538

Performance ratings do not include the effects of appurtenances (accessories).
Power ratings (BHP) do not include transmission losses.
Performance certified is for installation type A-free inlet, free outlet.
The sound ratings shown are loudness values in fan sones @ 5' (1.5m) in a hemispherical free field calculated per AMCA Standard 301. Values shown are for installation Type A-Free inlet fan sone levels.

Due to air stream cooling, the motor loading into the service factor shown does not overheat the motor and is within NEMA recommended limits. BHP at most static pressure points is less than the maximum power shown - in many cases substantially less. Use Optisizer to see the exact BHP for your selection.

Model LC
Size 24

Limits			Panel OD Square	Min. Wall Opening	Damper OD	Approx. Wt
Model	RPM	Motor Frame				
LC	1100	145T	30	31 1/2	28 1/2	90

Kruger Ventilation Industries Asia Co., Ltd certifies that the models shown herein are licensed to bear the AMCA Seal. The ratings shown are based on test and procedures performed in accordance with AMCA Publication 211 and AMCA Publication 311 and comply with the requirement of the AMCA Certified Ratings Program.

	Size	Motor HP	Max BHP	Fan RPM	Sones (0.00" SP)	Static Pressure (Inches W.G)									
						.000	.100	.125	.150	.200	.250	.300	.375	.500	.625
Level 1 Construction	Model LC 24		0.25	555	9.0	4931	4168	3905	3574	2256	-	-	-	-	-
		1/4	0.27	570	9.4	5065	4332	4085	3787	2460	-	-	-	-	-
			0.30	600	10.2	5331	4652	4431	4180	3501	2269	-	-	-	-
			0.33	625	10.9	5553	4912	4709	4482	3891	-	-	-	-	-
		1/3	0.36	645	11.6	5731	5117	4926	4715	4187	-	-	-	-	-
			0.41	660	12.1	5864	5268	5086	4885	4398	3702	-	-	-	-
			0.50	715	14.0	6353	5815	5658	5487	5097	4592	-	-	-	-
		1/2	0.54	735	14.7	6531	6011	5861	5699	5332	4877	-	-	-	-
			0.58	750	15.3	6664	6157	6012	5856	5504	5081	4535	-	-	-
			0.60	760	15.7	6753	6254	6112	5959	5617	5212	4686	-	-	-
			0.75	820	17.9	7286	6831	6704	6570	6276	5941	5577	-	-	-
		3/4	0.80	840	18.6	7464	7021	6898	6770	6489	6170	5804	-	-	-
			0.85	855	19.1	7597	7163	7044	6918	6646	6340	5991	5316	-	-
			0.90	875	19.8	7775	7352	7237	7116	6855	6562	6234	5600	-	-
			1.00	905	21	8041	7635	7524	7409	7163	6890	6586	6040	-	-
		1	1.10	935	22	8308	7916	7810	7700	7467	7211	6927	6437	-	-
			1.20	950	22	8441	8057	7953	7845	7618	7369	7094	6625	5559	-
			1.50	1035	25	9196	8847	8754	8658	8458	8244	8013	7628	6836	-
		1 1/2	1.65	1070	27	9507	9170	9081	8989	8798	8595	8378	8019	7308	-
			1.82	1100	28	9774	9447	9361	9272	9088	8894	8687	8347	7688	6808

Performance ratings do not include the effects of appurtenances (accessories).
Power ratings (BHP) do not include transmission losses.
Performance certified is for installation type A-free inlet, free outlet.
The sound ratings shown are loudness values in fan sones @ 5' (1.5m) in a hemispherical free field calculated per AMCA Standard 301. Values shown are for installation Type A-Free inlet fan sone levels.

Due to air stream cooling, the motor loading into the service factor shown does not overheat the motor and is within NEMA recommended limits.
BHP at most static pressure points is less than the maximum power shown - in many cases substantially less. Use Optisizer to see the exact BHP for your selection.

Model LC
Size 30

Limits			Panel OD Square	Min. Wall Opening	Damper OD	Approx. Wt
Model	RPM	Motor Frame				
LC	815	145T	36	37 1/2	34 1/2	100

Kruger Ventilation Industries Asia Co., Ltd certifies that the models shown herein are licensed to bear the AMCA Seal. The ratings shown are based on test and procedures performed in accordance with AMCA Publication 211 and AMCA Publication 311 and comply with the requirement of the AMCA Certified Ratings Program.

	Size	Motor HP	Max BHP	Fan RPM	Sones (0.00" SP)	Static Pressure (Inches W.G)								
						.000	.100	.125	.150	.200	.250	.300	.375	.500
Level 1 Construction	Model LC 30		0.25	425	8.3	6956	5509	4962	4215	-	-	-	-	-
		1/4	0.27	435	8.6	7119	5735	5212	4608	-	-	-	-	-
			0.30	450	9.0	7365	6062	5572	5034	-	-	-	-	-
			0.33	465	9.5	7610	6370	5922	5422	-	-	-	-	-
		1/3	0.36	480	9.9	7856	6665	6270	5794	-	-	-	-	-
			0.40	495	10.5	8101	6954	6603	6152	5073	-	-	-	-
			0.50	535	12.0	8756	7709	7419	7074	6211	-	-	-	-
		1/2	0.55	550	12.7	9001	7988	7709	7400	6586	5511	-	-	-
			0.59	565	13.3	9247	8271	7995	7712	6949	6052	-	-	-
			0.75	610	15.3	9983	9117	8839	8589	7995	7242	6351	-	-
		3/4	0.82	630	16.2	10311	9487	9216	8968	8436	7728	6945	-	-
			0.90	650	17.1	10638	9853	9594	9343	8857	8198	7473	-	-
			1.00	670	18.0	10965	10216	9969	9716	9253	8665	7978	6549	-
		1	1.11	695	19.3	11375	10665	10434	10188	9738	9228	8581	7501	-
			1.20	715	20	11702	11021	10802	10565	10120	9659	9098	8052	-
			1.50	770	23	12602	11990	11798	11589	11151	10752	10298	9427	-
		1 1/2	1.63	790	23	12929	12339	12156	11956	11526	11135	10723	9899	8281
			1.78	815	24	13339	12773	12599	12411	12000	11609	11223	10482	9013

Performance ratings do not include the effects of appurtenances (accessories).
Power ratings (BHP) do not include transmission losses.
Performance certified is for installation type A-free inlet, free outlet.
The sound ratings shown are loudness values in fan sones @ 5' (1.5m) in a hemispherical free field calculated per AMCA Standard 301. Values shown are for installation Type A-Free inlet fan sone levels.

Due to air stream cooling, the motor loading into the service factor shown does not overheat the motor and is within NEMA recommended limits.
BHP at most static pressure points is less than the maximum power shown - in many cases substantially less. Use Optisizer to see the exact BHP for your selection.

Model LC
Size 36

Limits			Panel OD Square	Min. Wall Opening	Damper OD	Approx. Wt
Model	RPM	Motor Frame				
LC	695	145T	42	43 1/2	40 1/2	105

Kruger Ventilation Industries Asia Co., Ltd certifies that the models shown herein are licensed to bear the AMCA Seal. The ratings shown are based on test and procedures performed in accordance with AMCA Publication 211 and AMCA Publication 311 and comply with the requirement of the AMCA Certified Ratings Program.

	Size	Motor HP	Max BHP	Fan RPM	Sones (0.00" SP)	Static Pressure (Inches W.G)										
						.000	.100	.125	.150	.200	.250	.300	.375	.500	.625	.750
Level 1 Construction	Model LC 36		0.33	360	8.5	9927	7580	6735	5537	-	-	-	-	-	-	-
		1/3	0.35	370	8.9	10203	7973	7153	6222	-	-	-	-	-	-	-
			0.41	390	9.7	10755	8745	7976	7190	-	-	-	-	-	-	-
			0.50	415	10.8	11444	9631	8967	8237	6333	-	-	-	-	-	-
		1/2	0.55	430	11.5	11858	10126	9550	8849	7340	-	-	-	-	-	-
			0.59	440	11.9	12133	10449	9923	9248	7840	-	-	-	-	-	-
			0.75	475	13.7	13098	11556	11133	10611	9337	7872	-	-	-	-	-
		3/4	0.82	490	14.5	13512	12022	11620	11162	9954	8675	-	-	-	-	-
			0.90	505	15.3	13926	12485	12100	11686	10557	9348	7384	-	-	-	-
			1.00	525	16.4	14477	13103	12731	12348	11345	10187	8897	-	-	-	-
		1	1.09	540	17.3	14891	13562	13199	12834	11930	10809	9653	-	-	-	-
			1.19	555	18.1	15305	14018	13663	13312	12495	11419	10317	-	-	-	-
			1.50	600	20	16545	15373	15048	14720	14055	13195	12186	10619	-	-	-
		1 1/2	1.58	610	21	16821	15671	15353	15029	14381	13577	12590	11076	-	-	-
			1.79	635	22	17511	16413	16111	15801	15186	14497	13578	12146	-	-	-
			2.00	655	23	18062	17003	16713	16415	15819	15189	14366	12975	9909	-	-
		2	2.22	680	24	18751	17737	17461	17177	16600	16014	15313	13996	11612	-	-
			2.37	695	25	19165	18176	17907	17631	17065	16499	15859	14594	12363	-	-

Performance ratings do not include the effects of appurtenances (accessories).
Power ratings (BHP) do not include transmission losses.
Performance certified is for installation type A-free inlet, free outlet.
The sound ratings shown are loudness values in fan sones @ 5' (1.5m) in a hemispherical free field calculated per AMCA Standard 301. Values shown are for installation Type A-Free inlet fan sone levels.

Due to air stream cooling, the motor loading into the service factor shown does not overheat the motor and is within NEMA recommended limits.
BHP at most static pressure points is less than the maximum power shown - in many cases substantially less. Use Optisizer to see the exact BHP for your selection.

Model LC
Size 42

Limits			Panel OD Square	Min. Wall Opening	Damper OD	Approx. Wt
Model	RPM	Motor Frame				
LC	550	145T	48	49 1/2	46 1/2	110

Kruger Ventilation Industries Asia Co., Ltd certifies that the models shown herein are licensed to bear the AMCA Seal. The ratings shown are based on test and procedures performed in accordance with AMCA Publication 211 and AMCA Publication 311 and comply with the requirement of the AMCA Certified Ratings Program.

Level 1 Construction

Model LC 42

Size	Motor HP	Max BHP	Fan RPM	Sones (0.10" SP)	Static Pressure (Inches W.G)										
					.000	.100	.125	.150	.200	.250	.300	.375	.500	.625	.750
		0.33	285	8.3	12309	8342	6281	-	-	-	-	-	-	-	-
	1/3	0.37	295	8.3	12741	8967	7579	-	-	-	-	-	-	-	-
		0.41	305	8.4	13173	9658	8439	5438	-	-	-	-	-	-	-
		0.50	325	8.8	14037	10969	9725	8483	-	-	-	-	-	-	-
	1/2	0.54	335	9.3	14469	11549	10380	9305	-	-	-	-	-	-	-
		0.60	345	9.8	14901	12109	11073	9960	-	-	-	-	-	-	-
		0.75	375	11.4	16197	13705	12938	11928	9768	-	-	-	-	-	-
	3/4	0.83	385	12.0	16629	14218	13498	12606	10619	-	-	-	-	-	-
		0.90	395	12.6	17060	14724	14044	13252	11285	7292	-	-	-	-	-
		1.00	410	13.4	17708	15474	14842	14128	12233	9895	-	-	-	-	-
	1	1.11	425	14.3	18356	16214	15618	14966	13217	11433	6467	-	-	-	-
		1.20	435	14.9	18788	16703	16128	15508	13911	12182	8485	-	-	-	-
		1.50	470	16.9	20300	18400	17874	17336	16118	14419	12885	-	-	-	-
	1 1/2	1.65	485	17.9	20948	19119	18609	18095	16964	15460	13900	9198	-	-	-
		1.81	500	18.8	21596	19833	19339	18845	17784	16470	14848	11827	-	-	-
		2.00	515	19.8	22243	20543	20067	19587	18583	17410	15805	13517	-	-	-
	2	2.22	535	21	23107	21482	21029	20566	19623	18561	17190	15068	-	-	-
		2.40	550	22	23755	22182	21746	21295	20388	19393	18190	16034	-	-	-

Performance ratings do not include the effects of appurtenances (accessories).
Power ratings (BHP) do not include transmission losses.
Performance certified is for installation type A-free inlet, free outlet.
The sound ratings shown are loudness values in fan sones @ 5' (1.5m) in a hemispherical free field calculated per AMCA Standard 301. Values shown are for installation Type A-Free inlet fan sone levels.

Due to air stream cooling, the motor loading into the service factor shown does not overheat the motor and is within NEMA recommended limits.
BHP at most static pressure points is less than the maximum power shown - in many cases substantially less. Use Optisizer to see the exact BHP for your selection.

Model LC
Size 48

Limits			Panel OD Square	Min. Wall Opening	Damper OD	Approx. Wt
Model	RPM	Motor Frame				
LC	455	145T	54	55 1/2	52 1/2	125

Kruger Ventilation Industries Asia Co., Ltd certifies that the models shown herein are licensed to bear the AMCA Seal. The ratings shown are based on test and procedures performed in accordance with AMCA Publication 211 and AMCA Publication 311 and comply with the requirement of the AMCA Certified Ratings Program.

Level 1 Construction

Model LC 48

Size	Motor HP	Max BHP	Fan RPM	Sones (0.10" SP)	Static Pressure (Inches W.G)										
					.000	.100	.125	.150	.200	.250	.300	.375	.500	.625	.750
		0.50	270	9.5	16739	11961	9933	-	-	-	-	-	-	-	-
	1/2	0.56	280	9.7	17359	12936	11133	6659	-	-	-	-	-	-	-
		0.62	290	10.0	17979	13841	12199	10077	-	-	-	-	-	-	-
		0.69	300	10.4	18599	14684	13193	11413	-	-	-	-	-	-	-
	3/4	0.75	310	10.9	19219	15459	14171	12556	-	-	-	-	-	-	-
		0.83	320	11.6	19839	16210	15101	13600	-	-	-	-	-	-	-
		0.91	330	12.1	20459	16949	15969	14584	10759	-	-	-	-	-	-
		1.00	340	12.7	21079	17678	16778	15563	12363	-	-	-	-	-	-
	1	1.09	350	13.4	21699	18411	17542	16493	13606	-	-	-	-	-	-
		1.14	355	13.7	22009	18777	17917	16936	14174	-	-	-	-	-	-
		1.23	365	14.3	22629	19504	18659	17784	15243	10868	-	-	-	-	-
		1.50	390	15.9	24179	21296	20488	19711	17720	15058	-	-	-	-	-
	1 1/2	1.63	400	16.7	24799	22004	21219	20452	18668	16187	11973	-	-	-	-
		1.82	415	17.8	25729	23054	22306	21548	19994	17746	14950	-	-	-	-
		2.00	430	18.9	26659	24093	23381	22647	21217	19215	16819	-	-	-	-
	2	2.16	440	19.6	27279	24779	24091	23377	21983	20194	17929	-	-	-	-
		2.39	455	21	28209	25800	25148	24463	23107	21574	19479	15382	-	-	-

Performance ratings do not include the effects of appurtenances (accessories).
Power ratings (BHP) do not include transmission losses.
Performance certified is for installation type A-free inlet, free outlet.
The sound ratings shown are loudness values in fan sones @ 5' (1.5m) in a hemispherical free field calculated per AMCA Standard 301. Values shown are for installation Type A-Free inlet fan sone levels.

Due to air stream cooling, the motor loading into the service factor shown does not overheat the motor and is within NEMA recommended limits.
BHP at most static pressure points is less than the maximum power shown - in many cases substantially less. Use Optisizer to see the exact BHP for your selection.

Model LC
Size 54

Limits			Panel OD Square	Min. Wall Opening	Damper OD	Approx. Wt
Model	RPM	Motor Frame				
LC	425	182T	60	61 1/2	58 1/2	240

Kruger Ventilation Industries Asia Co., Ltd certifies that the models shown herein are licensed to bear the AMCA Seal. The ratings shown are based on test and procedures performed in accordance with AMCA Publication 211 and AMCA Publication 311 and comply with the requirement of the AMCA Certified Ratings Program.

	Size	Motor HP	Max BHP	Fan RPM	Sones (0.15" SP)	Static Pressure (Inches W.G)									
						.000	.125	.150	.200	.250	.300	.375	.500	.625	.750
Level 1 Construction	Model LC 54		0.75	250	9.8	21652	14977	10311	-	-	-	-	-	-	-
		3/4	0.82	260	10.4	22518	16507	13479	-	-	-	-	-	-	-
			0.92	270	11.0	23384	17932	15352	10232	-	-	-	-	-	-
			1.00	275	11.4	23817	18559	16095	11620	-	-	-	-	-	-
		1	1.09	285	12.3	24683	19720	17561	14816	-	-	-	-	-	-
			1.20	295	13.1	25550	20825	19097	16699	-	-	-	-	-	-
			1.50	315	14.8	27282	22932	21633	19683	12699	-	-	-	-	-
		1 1/2	1.61	325	15.5	28148	23950	22757	21183	15785	-	-	-	-	-
			1.84	340	16.8	29447	25449	24372	23109	19183	-	-	-	-	-
			2.00	350	17.7	30313	26434	25414	24259	20671	13599	-	-	-	-
		2	2.19	360	18.5	31179	27408	26437	25365	22133	16456	-	-	-	-
			2.38	370	19.4	32045	28375	27445	26439	23692	19651	-	-	-	-
			3.00	400	22	34643	31236	30401	29530	27543	24351	20039	-	-	-
		3	3.35	415	23	35943	32648	31852	31029	29213	26686	23274	-	-	-
			3.60	425	24	36809	33585	32812	32015	30290	28100	24785	15677	-	-

Performance ratings do not include the effects of appurtenances (accessories).
Power ratings (BHP) do not include transmission losses.
Performance certified is for installation type A-free inlet, free outlet.
The sound ratings shown are loudness values in fan sones @ 5' (1.5m) in a hemispherical free field calculated per AMCA Standard 301. Values shown are for installation Type A-Free inlet fan sone levels.

Due to air stream cooling, the motor loading into the service factor shown does not overheat the motor and is within NEMA recommended limits.
BHP at most static pressure points is less than the maximum power shown - in many cases substantially less. Use Optisizer to see the exact BHP for your selection.

Model LC
Size 60

Limits			Panel OD Square	Min. Wall Opening	Damper OD	Approx. Wt
Model	RPM	Motor Frame				
LC	380	182T	66	67 1/2	64 1/2	285

Kruger Ventilation Industries Asia Co., Ltd certifies that the models shown herein are licensed to bear the AMCA Seal. The ratings shown are based on test and procedures performed in accordance with AMCA Publication 211 and AMCA Publication 311 and comply with the requirement of the AMCA Certified Ratings Program.

	Size	Motor HP	Max BHP	Fan RPM	Sones (0.00" SP)	Static Pressure (Inches W.G)									
						.000	.125	.150	.200	.250	.375	.500	.625	.750	1.000
Level 1 Construction	Model LC 60		1.00	250	10.3	26878	20089	16672	-	-	-	-	-	-	-
		1	1.08	255	10.7	27416	20835	18009	-	-	-	-	-	-	-
			1.21	265	11.5	28491	22275	20109	-	-	-	-	-	-	-
			1.50	285	13.0	30641	25041	23280	20999	-	-	-	-	-	-
		1 1/2	1.69	295	13.9	31717	26369	24721	22844	-	-	-	-	-	-
			1.75	300	14.3	32254	27023	25433	23649	-	-	-	-	-	-
			2.00	310	15.1	33329	28317	26824	25176	18811	-	-	-	-	-
		2	2.23	325	16.3	34942	30222	28846	27344	23361	-	-	-	-	-
			2.44	335	17.1	36017	31464	30159	28751	25399	-	-	-	-	-
			3.03	360	19.1	38705	34490	33367	32125	29373	25314	-	-	-	-
		3	3.29	370	20	39780	35672	34618	33430	30822	27531	-	-	-	-
			3.56	380	21	40855	36826	35849	34723	32244	29351	-	-	-	-

Performance ratings do not include the effects of appurtenances (accessories).
Power ratings (BHP) do not include transmission losses.
Performance certified is for installation type A-free inlet, free outlet.
The sound ratings shown are loudness values in fan sones @ 5' (1.5m) in a hemispherical free field calculated per AMCA Standard 301. Values shown are for installation Type A-Free inlet fan sone levels.

Due to air stream cooling, the motor loading into the service factor shown does not overheat the motor and is within NEMA recommended limits.
BHP at most static pressure points is less than the maximum power shown - in many cases substantially less. Use Optisizer to see the exact BHP for your selection.

THE KRUGER GROUP

· THAILAND (Regional HQ)

KRUGER VENTILATION INDUSTRIES ASIA CO. LTD.
30/159 Moo 1, Sinsakorn Industrial Estate,
Chetsadawithi Road, Khok Kham Mueng, Samuthsakorn 74000, Thailand
Tel. +662 1054298 - Fax +662 0248256-9
Website: www.krugerfan.com

· AUSTRALIA

S&P-KRUGER AUSTRALIA PTY LTD
2 Cunningham St, Moorebank N.S.W. 2170
Tel. +61 2-98227747
Fax. +61 2-98227757
Email: info@sandpkruger.com.au

• CHINA (BEIJING)

BEIJING KRUGER VENTILATION CO. LTD
Level 7, A Block, Rising International Building, 29 JingHai San Road, BDA,
Beijing, P.R.China 100176
Tel. +86 10-67881366 - Fax +86 10-67880566
Email: krugertj@krugertj.com

· CHINA (GUANGZHOU)

GUANGZHOU KRUGER VENTILATION CO. LTD
No. 9 Huahui Road, Huashan, Huadu,
Guangzhou, P.R. China 510880
Tel. +86 20-66356635 - Fax +86 20-86786001/86786500
Email: gzkruger@krugergz.com

• CHINA (SHANGHAI)

SHANGHAI KRUGER VENTILATION CO. LTD
No. 500 Yuanguo Road, Anting, Jiading,
Shanghai 201814 P.R. China
Tel. +86 21-69573266 - Fax +86 21-69573296
Email: shkruger@krugerchina.com

· CHINA (TIANJIN)

TIANJIN KRUGER VENTILATION CO. LTD
No.168 Anyuan Road, Jingjin Science and Technology Park
Wuqing District, Tianjin, China
Tel. +86 22-22143480/3481 - Fax +86 22-22143482
Email: krugertj@krugertj.com

· CHINA (WUHAN)

WUHAN KRUGER VENTILATION CO. LTD
No. 805, Huian Ave, Dongxihu District, Wuhan, Hubei, P.R. China 430000
Tel. +86 27- 83248840/83060522/83097505
Fax +86 27- 83261886
Email: whkruger@krugerwh.com

· DUBAI

KRUGER VENTILATION INDUSTRIES, GULF BRANCH
Jebel Ali Free Zone Area (JAFZA) P.O. Box No. 262949, Dubai, UAE
Tel. +971 4 8819188/8832017
Fax. +971 4 8832018
Email: johncs@krugerasia.com

· HONG KONG

KRUGER VENTILATION (HONG KONG) LIMITED
Flat C, 9/F, Yeung Yiu Chung (No.8) Industrial Building,
20 Wang Hoi Road, Kowloon Bay, Kowloon, Hong Kong
Tel. +852 22469182 - Fax +852 22469187
Email: info@kruger.com.hk

· INDIA

KRUGER VENTILATION INDUSTRIES (INDIA) PVT LTD
Kruger Centre, Mumbai-Nasik Highway,
Kalamgaon, Shahapur, Thane 421601, Maharashtra, India
Tel. +91 9960558899/9975577211 - Fax +91 2527 240075
Email: sales@krugerindia.com

· INDIA (NORTH)

KRUGER VENTILATION INDUSTRIES (NORTH INDIA) PVT LTD
Plot No. - 191, Sector - 59, Ballabgarh, Faridabad - 121 004, Haryana, India
Tel. +91-9958991660/9717449696
Fax. +91-1294135820
Email: sales.kni@krugerindia.com

· INDONESIA

P.T. KRUGER VENTILATION INDONESIA
JL. Teuku Umar No.20,
Karawaci - Tangerang 15115, Indonesia
Tel. +62 21-5512288/5513557 - Fax +62 21-5513502
Email: mktg@krugerindo.co.id

· KOREA

NEOMATE CO. LTD
2-1010, Ace High Tech City B/D, 775 Gyeongin-ro,
Yeongdeungpo-gu, Seoul, Korea. Postal Code 07299
Tel. +82-2-2679-2052 - Fax. +82-2-2679-2174
Email: y7890@neomate.co.kr

· MALAYSIA

KRUVENT INDUSTRIES (M) SDN BHD
Lot 850, Jalan Subang 7, Taman Perindustrian Subang,
47500, Subang Jaya, Selangor D.E.
Tel. +603 80743399 - Fax +603 80743388
Email: mktg@kruger.com.my

· MYANMAR

KRUGER VENTILATION (MYANMAR) CO.LTD
Room No. F21, Thiri Yadanar Whole Sale Market, (Htawunbe)
Toe Chae Ward, North Okkalapa Township, Yangon.
Tel. +959 763141081/2/3
Email: htoon@krugermm.com

· PHILIPPINES

KRUGER M&E INDUSTRIES CORPORATION
FAPI Compound, E. Rodriguez Ave.
Tunasan, Muntinlupa City 1773, Philippines
Tel. +63 2-8622892/4/6/7, 5534059 - Fax +63 2-8622891
Email: mktg@krugerph.net

· SINGAPORE

KRUGER ENGINEERING PTE LTD
No. 10 Buroh Street #06-06, West Connect Building,
Singapore 627564
Tel. +65 68631191 - Fax +65 68631151
Email: mktg@krugerasia.com

· TAIPEI

KRUGER VENTILATION (TAIWAN) CO. LTD
No. 157, Ping-an Rd, Hengfeng Village,
Dayuan Shiang Taoyuan County 337, Taiwan
Tel. +886 3-3859119 - Fax +886 3-3859118
Email: sales@krugertwn.com.tw

· THAILAND

KRUGER VENTILATION IND. (THAILAND) CO. LTD
30/105 Moo 1, Sinsakorn Industrial Estate,
Chetsadawithi Road, Khok Kham Mueng, Samuthsakorn 74000, Thailand
Tel. +662 1050399 - Fax + 662 1050370-2
Email: mktg@kruger.co.th

· VIETNAM

KRUGER VENTILATION INDUSTRIES (VIETNAM) CO. LTD
Lot A7. 2-4, C2 Road, Thanh Thanh Cong IZ,
Trang Bang Dist. Tay Ninh Province, Vietnam
Tel. +84-276 3585200/01/02 - Fax +84-276 3585199
Email: mktg@krugervn.com

The company is always improving and developing its products, therefore the company reserves the right of making changes to the illustrated products.
Certified dimension can be provided upon request.

LEA102.E0 January 2018
Edition 2
Printed in January 2018

A member of
Soler&Palau Ventilation Group