KRUGER

CPA Series

CABINET FAN



Cabinet Fan - **CPA Series**

Construction

- *Incorporated with direct drive , axial flow fan –TDA, TDA-V or MXA Series. Cabinet is manufactured in galvanized sheet steel.*
- *Removable access door for convenient access to the fan.*
- *Easy to install.*
- *Acoustic lining is available upon request.*

Blade

- *The blades are made of Aluminum, Glass Reinforced Polypropylene (PPG) or Glass Reinforced Polyamide (PAG).*

Motor

- *Totally enclosed Class 'F' motor with min. IP55 protection are fitted as standard. Standard motors up to 2.2 kW are usually supplied on DOL starting, motors 3.0 kW and above are star/delta starting.*

Airflow Direction

- *Air flow from impeller to motor (B) is fitted as standard. Air flow from motor to impeller (A) can be supplied upon request.*

Others

- *Type of fan used: CPA-T ---- TDA-L; CPA-V ---- TDA-V; CPA-M ---- MXA.*
- *For smokespill application, please consult the nearest Kruger office for details.*

DIMENSION

CPA-T & CPA-V

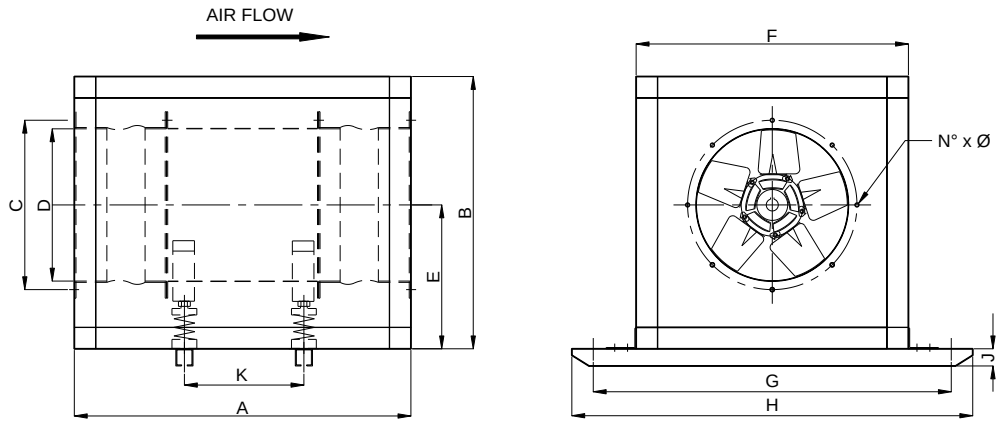

All Dimension in mm

Model	A	B	C	D	E	F	G	H	J	K	N x Ø	Weight* (kg)	Max. Motor Frame Size*
CPA 315-T/V	790	605	355	315	302.5	605	795	895	40	304	8 x 10	53	D71
CPA 355-T/V	790	635	395	355	317.5	635	835	935	40	304	8 x 10	62	D80
CPA 400-T/V	790	680	440	400	340	680	880	980	40	304	12 x 10	68	D90
CPA 450-T/V	830	730	490	450	365	730	930	1030	40	340	12 x 10	79	D90
CPA 500-T/V	930	780	540	500	390	780	980	1080	50	430	12 x 10	102	D90
CPA 560-T/V	930	900	605	560	450	900	1100	1200	50	430	12 x 10	121	D112
CPA 630-T/V	930	970	675	630	485	970	1170	1270	50	430	12 x 10	135	D112
CPA 710-T/V	1030	1070	755	710	535	1070	1370	1470	80	530	18 x 12	197	D112
CPA 800-T/V	1060	1150	845	800	575	1150	1450	1550	80	550	18 x 12	250	D132
CPA 900-T/V	1160	1250	945	900	625	1250	1550	1650	80	650	18 x 12	307	D160
CPA 1000-T/V	1210	1400	1050	1000	700	1400	1700	1800	80	670	24 x 12	419	D160
CPA 1120-T/V	1350	1550	1185	1120	775	1550	1850	1950	100	750	24 x 12	618	D225
CPA 1250-T/V	1450	1630	1315	1250	815	1630	1930	2030	100	850	24 x 12	752	D250
CPA 1400-T/V	1550	1877	1465	1400	938.5	1877	2177	2277	100	978	32 x 12	910	D250

* The weight without motor, impeller & vibration isolator.
* Please consult the nearest Kruger office if motor frame size is beyond this range.

Cabinet Fan - **CPA Series**

DIMENSION

CPA-M

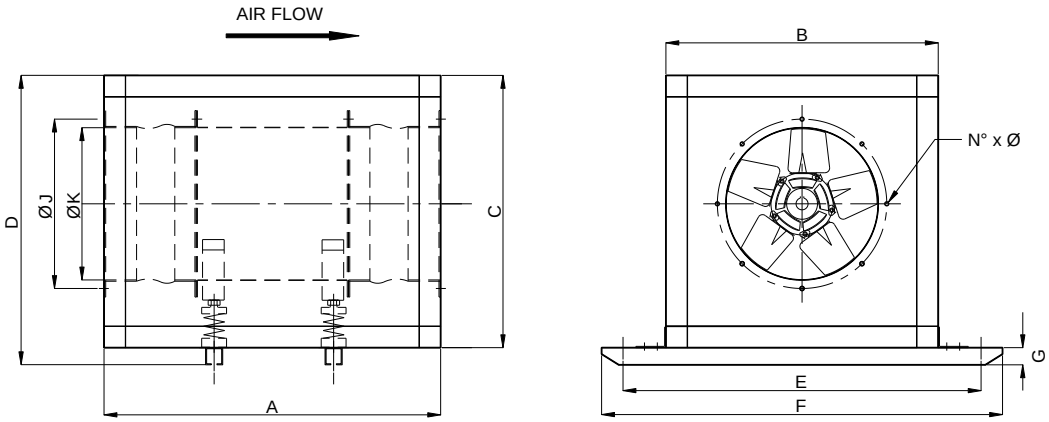

All dimensions in mm.

Model	A*	B	C	D	E	F	G	J	K	N x Ø	Max. Motor Frame Size*
CPA 400-M	790-840	680	680	720	880	980	40	440	400	12 x 10	D71
CPA 450-M	830-930	730	730	770	930	1030	40	490	450	12 x 10	D80
CPA 500-M	880-980	780	780	830	980	1080	50	540	500	12 x 10	D90
CPA 560-M	930-1130	900	900	950	1100	1200	50	605	560	12 x 10	D100
CPA 630-M	930-1130	970	970	1020	1170	1270	50	675	630	12 x 10	D112
CPA 710-M	1030-1330	1070	1070	1150	1370	1470	80	755	710	18 x 12	D132
CPA 800-M	1080-1380	1150	1150	1230	1450	1550	80	845	800	18 x 12	D132
CPA 900-M	1130-1580	1250	1250	1330	1550	1650	80	945	900	18 x 12	D160
CPA 1000-M	1140-1590	1400	1400	1480	1700	1800	80	1050	1000	24 x 12	D180
CPA 1120-M	1250-1750	1450	1450	1550	1750	1850	100	1185	1120	24 x 12	D200
CPA 1250-M	1250-1750	1580	1580	1680	1880	1980	100	1315	1250	24 x 12	D280
CPA 1400-M	1250-2050	1730	1730	1830	2130	2230	100	1465	1400	32 x 12	D315

* Fan weight is available upon request.
* Please consult the nearest Kruger office if motor frame size is beyond this range.
* “A” Dimension is subject to motor frame size.

THE KRUGER GROUP

KRUGER

- **THAILAND (Regional HQ)**

KRUGER VENTILATION INDUSTRIES ASIA CO. LTD.
30/159 Moo 1, Sinsakorn Industrial Estate,
Chetsadawithi Road, Khok Kham Mueng, Samuthsakorn 74000, Thailand
Tel. +662 1054298 - Fax +662 0248256 to 9
Website: www.krugerfan.com

- **CHINA (BEIJING)**

BEIJING KRUGER VENTILATION CO. LTD
Level 7, A Block, Rising International Building, 29 JingHai San Road, BDA,
Beijing, P.R.China 100176
Tel. +86 10-67881366 - Fax +86 10-67880566
Email: krugertj@krugertj.com

- **CHINA (SHANGHAI)**

SHANGHAI KRUGER VENTILATION CO. LTD
No. 500 Yuanguo Road, Anting, Jiading,
Shanghai 201814 P.R. China
Tel. +86 21-69573266 - Fax +86 21-69573296
Email: shkruger@krugerchina.com

- **CHINA (WUHAN)**

WUHAN KRUGER VENTILATION CO. LTD
No. 805, Huian Ave, Dongxihu District, Wuhan, Hubei, P.R. China 430000
Tel. +86 27- 83248840/83060522/83097505
Fax +86 27- 83261886
Email: whkruger@krugerwh.com

- **HONG KONG**

KRUGER VENTILATION (HONG KONG) LIMITED
Flat C, 9/F, Yeung Yiu Chung (No.8) Industrial Building,
20 Wang Hoi Road, Kowloon Bay, Kowloon, Hong Kong
Tel. +852 22469182 - Fax +852 22469187
Email: info@kruger.com.hk

- **INDIA (NORTH)**

KRUGER VENTILATION INDUSTRIES (NORTH INDIA) PVT LTD
Plot No. - 191, Sector - 59, Ballabgarh, Faridabad - 121 004, Haryana, India
Tel. +91-9958991660/9717449696
Fax. +91-1294135820
Email: sales.kni@krugerindia.com

- **KOREA**

NEOMATE CO. LTD
2-1010, Ace High Tech City B/D, 775 Gyeongin-ro,
Yeongdeungpo-gu, Seoul, Korea. Postal Code 07299
Tel. +82-2-2679-2052 - Fax. +82-2-2679-2174
Email: y7890@neomate.co.kr

- **MYANMAR**

KRUGER VENTILATION (MYANMAR) CO.LTD
Room No. F21, Thiri Yadanar Whole Sale Market, (Htawunbe)
Toe Chae Ward, North Okkalapa Township, Yangon.
Tel. +959 763141081/2/3
Email: htoon@krugermm.com

- **SINGAPORE**

KRUGER ENGINEERING PTE LTD
No. 10 Buroh Street #06-06, West Connect Building,
Singapore 627564
Tel. +65 68631191 - Fax +65 68631151
Email: mktg@krugerasia.com

- **THAILAND**

KRUGER VENTILATION IND. (THAILAND) CO. LTD
30/105 Moo 1, Sinsakorn Industrial Estate,
Chetsadawithi Road, Khok Kham Mueng, Samuthsakorn 74000, Thailand
Tel. +662 1050399 - Fax + 662 1050370-2
Email: mktg@kruger.co.th

- **AUSTRALIA**

S&P-KRUGER AUSTRALIA PTY LTD
2 Cunningham St, Moorebank N.S.W. 2170
Tel. +61 2-98227747
Fax. +61 2-98227757
Email: info@sandpkruger.com.au

- **CHINA (GUANGZHOU)**

GUANGZHOU KRUGER VENTILATION CO. LTD
No. 9 Huahui Road, Huashan, Huadu,
Guangzhou, P.R. China 510880
Tel. +86 20-66356635 - Fax +86 20-86786001/86786500
Email: gzkruger@krugergz.com

- **CHINA (TIANJIN)**

TIANJIN KRUGER VENTILATION CO. LTD
No.168 Anyuan Road, Jingjin Science and Technology Park
Wuqing District, Tianjin, China
Tel. +86 22-22143480/3481 - Fax +86 22-22143482
Email: krugertj@krugertj.com

- **DUBAI**

KRUGER VENTILATION INDUSTRIES, GULF BRANCH
Jebel Ali Free Zone Area (JAFZA) P.O. Box No. 262949, Dubai, UAE
Tel. +971 4 8819188/8832017
Fax. +971 4 8832018
Email: johncs@krugerasia.com

- **INDIA**

KRUGER VENTILATION INDUSTRIES (INDIA) PVT LTD
Kruger Centre, Mumbai-Nasik Highway,
Kalamgaon, Shahapur, Thane 421601, Maharashtra, India
Tel. +91 9960558899/9975577211 - Fax +91 2527 240075
Email: sales@krugerindia.com

- **INDONESIA**

P.T. KRUGER VENTILATION INDONESIA
JL. Teuku Umar No.20,
Karawaci - Tangerang 15115, Indonesia
Tel. +62 21-5512288/5513557 - Fax +62 21-5513502
Email: mktg@krugerindo.co.id

- **MALAYSIA**

KRUVENT INDUSTRIES (M) SDN BHD
Lot 850, Jalan Subang 7, Taman Perindustrian Subang,
47500, Subang Jaya, Selangor D.E.
Tel. +603 80743399 - Fax +603 80743388
Email: mktg@kruger.com.my

- **PHILIPPINES**

KRUGER M&E INDUSTRIES CORPORATION
FAPI Compound, E. Rodriguez Ave.
Tunasan, Muntinlupa City 1773, Philippines
Tel. +63 2-8622892/4/6/7, 5534059 - Fax +63 2-8622891
Email: mktg@krugerph.net

- **TAIPEI**

KRUGER VENTILATION (TAIWAN) CO. LTD
No. 157, Ping-an Rd, Hengfeng Village,
Dayuan Shiang Taoyuan County 337, Taiwan
Tel. +886 3-3859119 - Fax +886 3-3859118
Email: sales@krugertwn.com.tw

- **VIETNAM**

KRUGER VENTILATION INDUSTRIES (VIETNAM) CO. LTD
Lot A7. 2-4, C2 Road, Thanh Thanh Cong IZ,
Trang Bang Dist. Tay Ninh Province, Vietnam
Tel. +84-276 3585200/01/02 - Fax +84-276 3585199
Email: mktg@krugervn.com

The company is always improving and developing its products, therefore the company reserves the right of making changes to the illustrated products. Certified dimension can be provided upon request.

LEA104.E0 January 2018
Edition 2
Printed in January 2018

A member of
Soler&Palau Ventilation Group