KRUGER

APM Series

COMPACT AXIAL FANS



Plate Mounted Axial Flow Fans – **APM Series**

- *APM Series is designed for direct wall-mounting or panel-mounting.*
- *Suitable for ventilation application where the extraction of small volume of air at low pressure is required, eg. cafes, bars, small restaurants, commercial premises and small workshops.*
- *Complete with one piece bell mouth inlet and mounting plate manufactured from pressed galvanised steel with polyester painting finish.*
- *Fitted with steel finger-proof guard as standard mounted at the inlet side of fan.*
- *5-bladed impeller manufactured from aluminium finished with epoxy-polyester painting.*
- *Incorporates single phase shaded pole asynchronous induction motor and an auto reset thermal overload protection device.*
- *Supplied with a cable for connection to electrical supply.*
- *Max. operating temperature: APM 200-355: +40℃*

Dimension

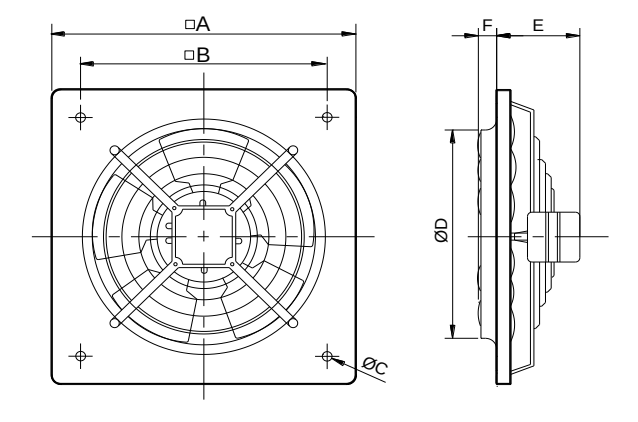

Model	□A	□B	ØC	ØD	E	F	Wt (kg)
APM 200	266	222	9	205	88	19	1.8
APM 250	333	275.5	9	255	99	31	2.2
APM 315	400	336.5	10.5	305	99	35.5	3.2
APM 355	465	390	10.5	361	106	34.5	4.3

All Dimensions in mm

Technical Data

Model	Max Q m³/h	Power W	Motor Protection	Motor	N° Pole	Hz	Max Amp	Volt	Insulation Class	dB (A) at 3m	RPM
APM 200	500	18	IP44	1 Phase	4	50	0.08	230	B	36	1300
APM 250	900	22	IP44	1 Phase	4	50	0.10	230	B	42	1300
APM 315	1400	30	IP44	1 Phase	4	50	0.15	230	B	48	1300
APM 355	1800	40	IP44	1 Phase	4	50	0.17	230	B	53	1300

** dB(A) at 3m measured at free discharge.*

Performance

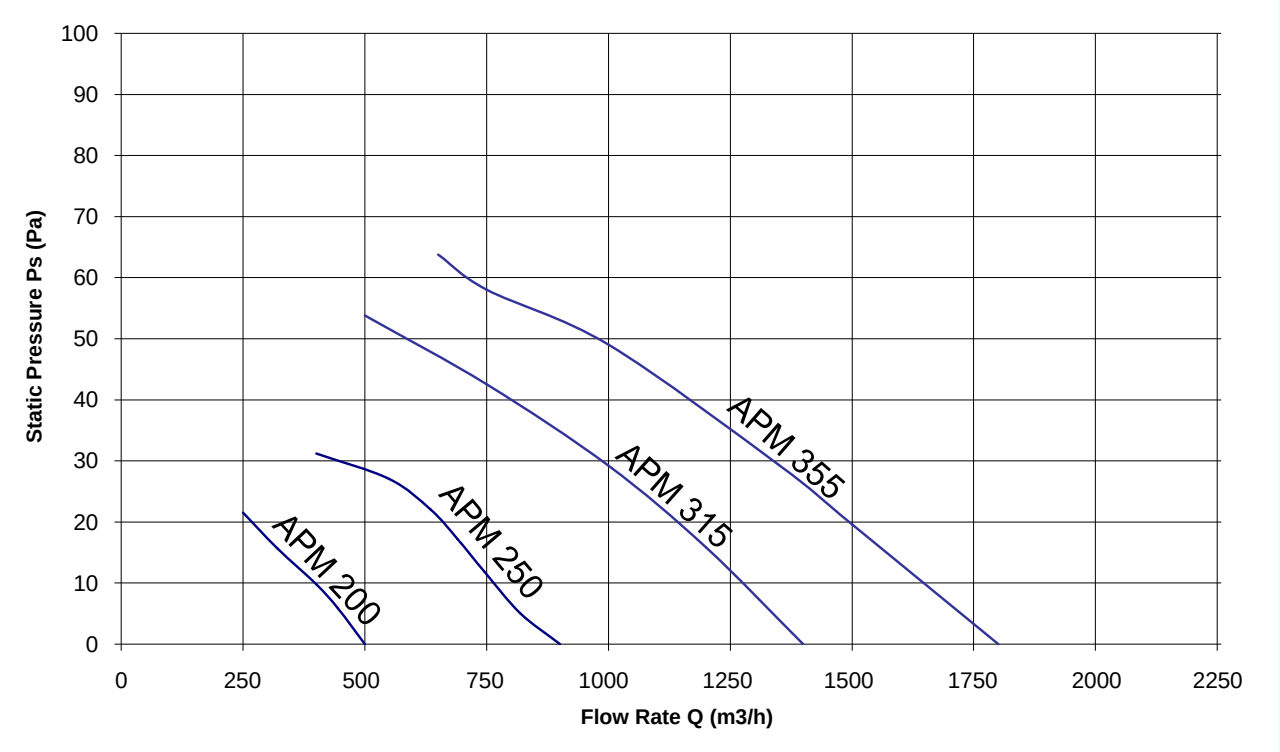

Electrical Accessories

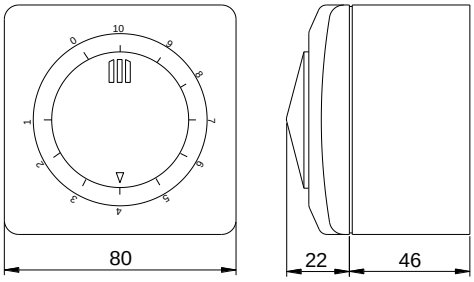

Electronic Single Phase Speed Controllers

- *Available in Wall Box or Flush Mount versions.*
- *Fuse protected + spare fuses included.*
- *Radio interference protected.*
- *Minimum speed adjustment.*
- *Single ON/OFF and speed regulation control knob.*

Type	Electrical Supply		IP Prot.	Power (VA)	Max. Amp	Ins. Cl	Operating Temp.	Type
	Hz	V						
REB-1N	50	220-240	IP-44	220	1.0	II	0-40°C	Wall Box
REB-1NE	50	220-240	IP-44	220	1.0	II	0-40°C	Flush Mounted

Mounting Accessories

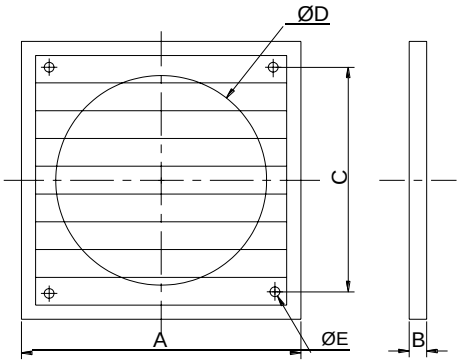

- ***Plastic louver back draft shutters***

Louvre back-draft shutters manufactured totally from UV stabilized plastic material. Supplied as standard in grey colour.

Plastic Shutters Type	A	B	C	D	∅ E	Model
PER-200 W	243	21	184	205	5	**APM 200**
PER-250 W	294	26	233	260	5	**APM 250**
PER-355 W	394	26	310	360	5	**APM 315 – APM 355**

All Dimensions in mm.

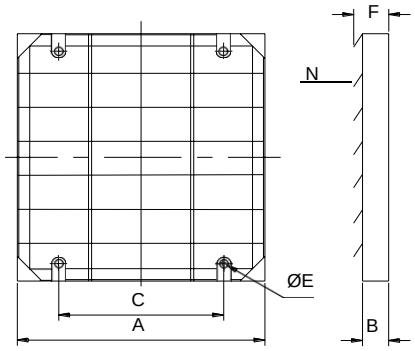

- ***Aluminium louver back draft shutters***

Louvre back-draft shutters with a steel frame and aluminium shutter blades.
Frame supplied as standard in grey colour.
All models are fitted with a bird guard.

Alu. Shutters Type	A	B	C	∅E	F	N	Model
PER-250 CN	333	40	287	8	104	6	**APM 200 – APM 250**
PER-355 CN	398	40	352	8	104	7	**APM 315 – APM 355**

All Dimensions in mm.

The company is always improving and developing its products, therefore the company reserves the right of making changes to the illustrated products.
Certified dimension can be provided upon request.

LEA050.E0 March 2018
Edition 6
Printed in March 2018

KRUGER VENTILATION INDUSTRIES ASIA CO LTD
. 30/159 Moo 1, Sinsakorn Industrial Estate, Chetsadawithi road,
Khok Kham, Mueng, Samutsakorn 74000, Thailand
- Tel +662 1054298 - Fax+662 0248256-9
- www.krugerfan.com

A member of Soler&Palau Ventilation Group