KRUGER

Speed Controller



Model SR

- *Kruger Speed Controller Model SR regulate the speed by varying the input voltage of the motor with minimise vibration and noise.*
- *Alternating current control output rated from AC210V~AC230V.*
- *Application: for use with fan series KDD, CSD and CDD only.*

• Dimensions

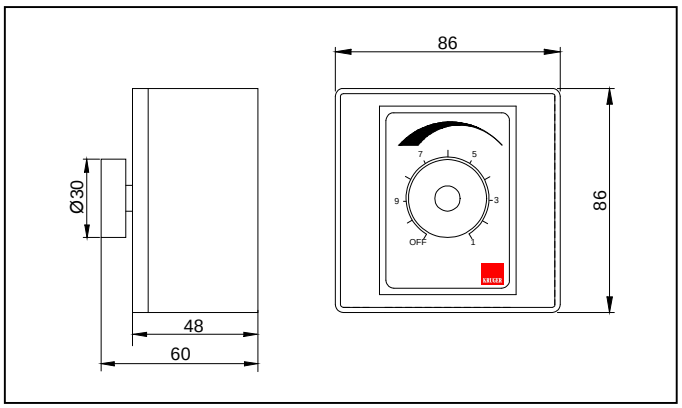

• Wiring Diagram

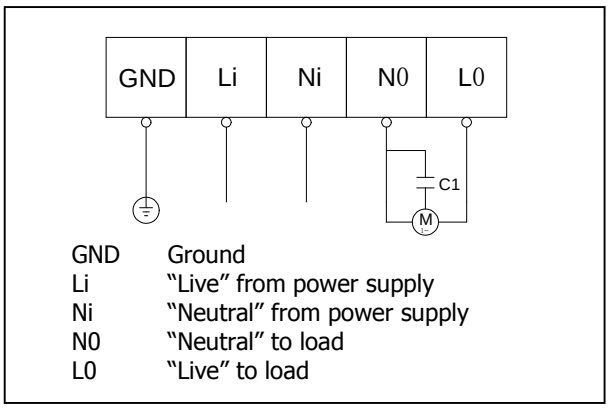

GND	Ground
Li	"Live" from power supply
Ni	"Neutral" from power supply
N0	"Neutral" to load
L0	"Live" to load

• General Specification

Model	SR-35	SR-50
Load Power Supply	AC220~240V	AC220~240V
Frequency	50/60Hz	50/60Hz
Max Voltage Output	AC210~230V	AC210~230V
Min Voltage Output	AC120~110V	AC120~110V
Loading Ability	Max 3.5A	Max 5A
Ambient Temperature	-10°C ~ +40°C	-10°C ~ +40°C
Ambient Humidity	45~95% RH	45~95% RH
Storage Temperature	+10°C ~ +55°C	+10°C ~ +55°C

THE KRUGER GROUP

KRUGER

• THAILAND (Regional HQ)

KRUGER VENTILATION INDUSTRIES ASIA CO. LTD.
30/159 Moo 1, Sinsakorn Industrial Estate,
Chetsadawithi Road, Khok Kham Mueng, Samuthsakorn 74000, Thailand
Tel. +662 1054298 - Fax +662 0248256 to 9
Website: www.krugerfan.com

• CHINA (BEIJING)

BEIJING KRUGER VENTILATION CO. LTD
Level 7, A Block, Rising International Building, 29 JingHai San Road, BDA,
Beijing, P.R.China 100176
Tel. +86 10-67881366 - Fax +86 10-67880566
Email: krugertj@krugertj.com

• CHINA (SHANGHAI)

SHANGHAI KRUGER VENTILATION CO. LTD
No. 500 Yuanguo Road, Anting, Jiading,
Shanghai 201814 P.R. China
Tel. +86 21-69573266 - Fax +86 21-69573296
Email: shkruger@krugerchina.com

• CHINA (WUHAN)

WUHAN KRUGER VENTILATION CO. LTD
No. 805, Huian Ave, Dongxihu District, Wuhan, Hubei, P.R. China 430000
Tel. +86 27- 83248840/83060522/83097505
Fax +86 27- 83261886
Email: whkruger@krugerwh.com

• HONG KONG

KRUGER VENTILATION (HONG KONG) LIMITED
Flat C, 9/F, Yeung Yiu Chung (No.8) Industrial Building,
20 Wang Hoi Road, Kowloon Bay, Kowloon, Hong Kong
Tel. +852 22469182 - Fax +852 22469187
Email: info@kruger.com.hk

• INDIA (NORTH)

KRUGER VENTILATION INDUSTRIES (NORTH INDIA) PVT LTD
Plot No. - 191, Sector - 59, Ballabgarh, Faridabad - 121 004, Haryana, India
Tel. +91-9958991660/9717449696
Fax. +91-1294135820
Email: sales.kni@krugerindia.com

• KOREA

NEOMATE CO. LTD
2-1010, Ace High Tech City B/D, 775 Gyeongin-ro,
Yeongdeungpo-gu, Seoul, Korea. Postal Code 07299
Tel. +82-2-2679-2052 - Fax. +82-2-2679-2174
Email: y7890@neomate.co.kr

• MYANMAR

KRUGER VENTILATION (MYANMAR) CO.LTD
Room No. F21, Thiri Yadanar Whole Sale Market, (Htawunbe)
Toe Chae Ward, North Okkalapa Township, Yangon.
Tel. +959 763141081/2/3
Email: htoon@krugermm.com

• SINGAPORE

KRUGER ENGINEERING PTE LTD
No. 10 Buroh Street #06-06, West Connect Building,
Singapore 627564
Tel. +65 68631191 - Fax +65 68631151
Email: mktg@krugerasia.com

• THAILAND

KRUGER VENTILATION IND. (THAILAND) CO. LTD
30/105 Moo 1, Sinsakorn Industrial Estate,
Chetsadawithi Road, Khok Kham Mueng, Samuthsakorn 74000, Thailand
Tel. +662 1050399 - Fax + 662 1050370-2
Email: mktg@kruger.co.th

• AUSTRALIA

S&P-KRUGER AUSTRALIA PTY LTD
2 Cunningham St, Moorebank N.S.W. 2170
Tel. +61 2-98227747
Fax. +61 2-98227757
Email: info@sandpkruger.com.au

• CHINA (GUANGZHOU)

GUANGZHOU KRUGER VENTILATION CO. LTD
No. 9 Huahui Road, Huashan, Huadu,
Guangzhou, P.R. China 510880
Tel. +86 20-66356635 - Fax +86 20-86786001/86786500
Email: gzkruger@krugergz.com

• CHINA (TIANJIN)

TIANJIN KRUGER VENTILATION CO. LTD
No.168 Anyuan Road, Jingjin Science and Technology Park
Wuqing District, Tianjin, China
Tel. +86 22-22143480/3481 - Fax +86 22-22143482
Email: krugertj@krugertj.com

• DUBAI

KRUGER VENTILATION INDUSTRIES, GULF BRANCH
Jebel Ali Free Zone Area (JAFZA) P.O. Box No. 262949, Dubai, UAE
Tel. +971 4 8819188/8832017
Fax. +971 4 8832018
Email: johncs@krugerasia.com

• INDIA

KRUGER VENTILATION INDUSTRIES (INDIA) PVT LTD
Kruger Centre, Mumbai-Nasik Highway,
Kalamgaon, Shahapur, Thane 421601, Maharashtra, India
Tel. +91 9960558899/9975577211 - Fax +91 2527 240075
Email: sales@krugerindia.com

• INDONESIA

P.T. KRUGER VENTILATION INDONESIA
JL. Teuku Umar No.20,
Karawaci - Tangerang 15115, Indonesia
Tel. +62 21-5512288/5513557 - Fax +62 21-5513502
Email: mktg@krugerindo.co.id

• MALAYSIA

KRUVENT INDUSTRIES (M) SDN BHD
Lot 850, Jalan Subang 7, Taman Perindustrian Subang,
47500, Subang Jaya, Selangor D.E.
Tel. +603 80743399 - Fax +603 80743388
Email: mktg@kruger.com.my

• PHILIPPINES

KRUGER M&E INDUSTRIES CORPORATION
FAPI Compound, E. Rodriguez Ave.
Tunasan, Muntinlupa City 1773, Philippines
Tel. +63 2-8622892/4/6/7, 5534059 - Fax +63 2-8622891
Email: mktg@krugerph.net

• TAIPEI

KRUGER VENTILATION (TAIWAN) CO. LTD
No. 157, Ping-an Rd, Hengfeng Village,
Dayuan Shiang Taoyuan County 337, Taiwan
Tel. +886 3-3859119 - Fax +886 3-3859118
Email: sales@krugertwn.com.tw

• VIETNAM

KRUGER VENTILATION INDUSTRIES (VIETNAM) CO. LTD
Lot A7. 2-4, C2 Road, Thanh Thanh Cong IZ,
Trang Bang Dist. Tay Ninh Province, Vietnam
Tel. +84-276 3585200/01/02 - Fax +84-276 3585199
Email: mktg@krugervn.com

LEA037.E0 January 2018
Edition 4
Printed in January 2018

A member of
Soler&Palau Ventilation Group