KRUGER

Operation Manual

Ecowatt® Drive K320C Series

VARIABLE FREQUENCY DRIVE

Ecowatt®



No.	Change description	Version	Release date
1	First release.	V1.0	July 2024

Preface

Thank you for choosing Kruger Variable Frequency Drive (VFD).
The Ecowatt Drive K320C series is a high performance variable-frequency drive (VFD) that specific designed to be applied in Fan and Pump application which integrates the latest Safety and Energy-saving functions for the demand control ventilation system. It can drive both synchronous motors and asynchronous motors.

[Energy saving]
This VFD adopts dedicated PID control mode for Demand Control Ventilation system to optimizes the voltage output of the VFD to the actual load of the FAN motor, thus minimizing its power consumption.

[Easy control]
It supports multiple kinds of popular control signal (0-10V signal, 4-20mA) and Modbus communication to realize complicated system solutions.
[High performance]
It armed with advanced vector control technology and the latest digital processor dedicated for motor control, thus enhancing product reliability and adaptability to the environment.

[Reliable]
Ecowatt Drive K320C uses high power density design. Some power ranges carry built-in DC reactor and Braking unit to save installation space. Through overall EMC design, it can satisfy the low noise and low electromagnetic interference requirements to cope with challenging grid, temperature, humidity and dust conditions, thus greatly improving product reliability.

This operation manual presents installation wiring, parameter setup, fault diagnosis and troubleshooting, and precautions related to daily maintenance. Read this manual carefully before installation to ensure the VFD is installed and operated in a proper manner to give full play to its excellent performance and powerful functions.

Contents

Preface ..... **ii**
Contents ..... **iii**
1 Safety precautions **1**
1.1 What this chapter contains 1
1.2 Safety definition 1
1.3 Warning 1
1.4 Safety guidelines 2
1.4.1 Delivery and installation 2
1.4.2 Commissioning and running 3
1.4.3 Maintenance and component replacement 3
1.4.4 Disposal 4
2 Quick startup **5**
2.1 What this chapter contains 5
2.2 Unpacking inspection 5
If any problems are found, contact the local dealer or Kruger office.Checking before use 5
2.3 Environment checking 5
2.4 Checking after installation 6
2.5 Basic commissioning 7
3 Product overview **8**
3.1 What this chapter contains 8
3.2 Basic principles 8
3.3 Product specifications 9
3.4 Product nameplate 10
3.5 Model designation code 11
3.6 Product ratings 12
3.7 Structure 13
4 Installation guidelines **14**
4.1 What this chapter contains 14
4.2 Mechanical installation 14
4.2.1 Installation environment 14
4.2.2 Installation direction 15
4.2.3 Mounting method 16
4.2.4 Installing one VFD 16
4.2.5 Multiple-VFD installation 17
4.2.6 Vertical installation 17
4.2.7 Tilted installation 18
4.2.8 Cabinet installation 18
4.3 Standard wiring of the main circuit 27

4.3.1 Main circuit wiring diagram 27
4.3.2 Main circuit terminal diagram 28
4.3.3 Wiring procedure for main circuit terminals 34
4.4 Standard wiring of the control circuit 35
4.4.1 Wiring diagram of basic control circuit 35
4.4.2 Input/output signal connection diagram 37
4.5 External optional keypad wiring 38
4.6 Wiring protection 39
5 Basic operation guidelines 40
5.1 What this chapter contains 40
5.2 Keypad operation 40
5.3 LED keypad (BOP-270) display and operation 40
5.3.1 Displaying stopped-state parameters 42
5.3.2 Displaying running-state parameters 43
5.3.3 Displaying fault alarms 43
5.3.4 Editing function codes 43
5.3.5 Modifying function codes 44
5.3.6 Setting a password for the VFD 44
5.3.7 Viewing VFD status 45
5.4 LCD keypad (SOP-270) display and operation 45
5.4.1 Displaying stopped-state parameters 48
5.4.2 Displaying running-state parameters 49
5.4.3 Displaying fault information 50
5.4.4 Entering/exiting menus 50
5.4.5 Editing a parameter list 54
5.4.6 Adding parameters to the parameter list displayed in stopped/running state 55
5.4.7 Adding parameters to the user defined parameter list 56
5.4.8 Editing user defined parameters 57
5.4.9 Editing parameters in parameter groups 57
5.4.10 Monitoring states 58
5.4.11 Autotuning motor parameters 58
5.4.12 Backing up parameters 59
5.4.13 System settings 59
5.4.14 Power-on setup wizard 60
5.5 Basic operation description 62
5.5.1 What this section describes 62
5.5.2 Common commissioning procedure 62
5.5.3 Vector control 65
5.5.4 Space voltage vector control mode 70
5.5.5 Torque control 78

5.5.6 Motor parameters 82
5.5.7 Start/stop control 87
5.5.8 Frequency setting 92
5.5.9 Analog input 97
5.5.10 Analog output 99
5.5.11 Digital input 102
5.5.12 Digital output 110
5.5.13 Simple PLC 114
5.5.14 Multi-step speed running 117
5.5.15 PID control 119
5.5.16 Water pump control 124
5.5.17 PID function only for water supply 136
5.5.18 Segmented water pressure 137
5.5.19 Automatic sleep 137
5.5.20 Pump cleaning 138
5.5.21 Water pipe break detection 139
5.5.22 Water pipe soft padding 140
5.5.23 Freezing protection 141
5.5.24 Condensation protection 142
6 Function parameter list 143
6.1 What this chapter contains 143
6.2 Function parameter list 143
P00 group—Basic functions 144
P01 group—Start and stop control 147
P02 group—Parameters of motor 1 154
P03 group—Vector control of motor 1 157
P04 group—V/F control 163
P05 group—Input terminals 170
P06 group—Output terminals 177
P07 group—Human-machine interface 182
P08 group—Enhanced functions 188
P09 group—PID control 195
P10 group—Simple PLC and multi-step speed control 199
P11 group—Protection parameters 203
P12 group—Parameters of motor 2 212
P13 group—SM control 215
P14 group—Serial communication 216
P15 group—Functions of communication expansion card 1 218
P16 group—Functions of communication expansion card 2 219
P17 group—Status viewing 219

P19 group—Expansion card status viewing 223
P23 group—Vector control of motor 2 224
P25 group—Input functions of expansion I/O card 226
P26 group—Output functions of expansion I/O card 228
P28 group—Master/slave control 231
P89 group—HVAC status viewing 232
P90 group—PID1 control 234
P91 group—PID2 control 237
P92 group—Real-time clock and timer (available at use of LCD keypad) 240
P93 group—Fire control 241
P94 group—HVAC 241
P95 group—Segmented water pressure (available at use of LCD keypad) 245
P96 group—HVAC protection 246
7 Troubleshooting 250
7.1 What this chapter contains 250
7.2 Indications of alarms and faults 250
7.3 Fault reset 250
7.4 Fault history 250
7.5 Faults and solutions 250
7.5.1 Faults and solutions 251
7.5.2 Other status 256
7.6 Analysis on common faults 257
7.6.1 Motor fails to work 257
7.6.2 Motor vibrates 258
7.6.3 Overvoltage 259
7.6.4 Undervoltage 259
7.6.5 Motor overheating 260
7.6.6 VFD overheating 261
7.6.7 Motor stalls during ACC 262
7.6.8 Overcurrent 263
7.7 Countermeasures on common interference 263
7.7.1 Interference on meter switches and sensors 263
7.7.2 Interference on RS485 communication 265
7.7.3 Failure to stop and indicator shimmering due to motor cable coupling 266
7.7.4 Leakage current and interference on RCD 266
7.7.5 Live device chassis 267
8 Maintenance 268
8.1 What this chapter contains 268
8.2 Periodical inspection 268
8.3 Cooling fan 271

8.4 Capacitor 273
8.4.1 Capacitor reforming 273
8.4.2 Electrolytic capacitor replacement 274
8.5 Power cable 274
9 Communication protocol 275
9.1 What this chapter contains 275
9.2 Modbus protocol introduction 275
9.3 Application of Modbus 275
9.3.1 RS485 275
9.3.2 RTU mode 278
9.4 RTU command code and communication data 281
9.4.1 Command code 03H, reading N words (continuously up to 16 words) 281
9.4.2 Command code 06H, writing a word 282
9.4.3 Command code 10H, continuous writing 283
9.4.4 Address definition 284
9.4.5 Fieldbus scale 288
9.4.6 Error message response 289
9.4.7 Read/Write operation examples 291
9.5 Common communication faults 295
Appendix A Expansion card 296
A.1 Model definition 296
A.2 Dimensions and installation 297
A.3 Wiring 300
A.4 I/O cards 301
A.4.1 EC-IO501-00 301
A.4.2 EC-IO503-00 303
A.5 Communication cards 304
A.5.1 PROFIBUS-DP communication card (EC-TX503D) 304
A.5.2 CAN multi-protocol communication card (EC-TX505C) 306
A.5.3 PROFINET communication card (EC-TX509C) 307
Appendix B Technical data 310
B.1 What this chapter contains 310
B.2 Derated application 310
B.2.1 Capacity 310
B.2.2 Derating 310
B.3 Grid specifications 311
B.4 Motor connection data 311
B.4.1 EMC compatibility and motor cable length 311
B.5 Application standards 312
B.5.1 CE marking 312

B.5.2 EMC compliance declaration 312
B.6 EMC regulations 313
Appendix C Dimension drawings 314
C.1 What this chapter contains 314
C.2 Keypad structure 314
C.2.1 Structure diagram 314
C.2.2 Keypad mounting bracket 315
C.3 VFD structure 316
C.4 Dimensions of AC 3PH 380V VFD models 316
C.4.1 Wall-mounting dimensions 316
C.4.2 Flange mounting dimensions 319
C.4.3 Floor mounting dimensions 322
Appendix D Optional peripheral accessories 325
D.1 What this chapter contains 325
D.2 Wiring of peripheral accessories 325
D.3 Power supply 326
D.4 Cables 326
D.4.1 Power cables 326
D.4.2 Control cables 327
D.4.3 Recommended cable size 328
D.4.4 Cable arrangement 331
D.4.5 Insulation inspection 331
D.5 Breakers and electromagnetic contactors 331
D.6 Reactors 333
D.7 Filters 335
D.7.1 Input filters 335
D.7.2 Output filters 337
D.8 List of other optional accessories 338
Appendix E Energy efficiency data 339
Appendix F Further information 341
F.1 Product and service queries 341
F.2 Feedback on Kruger VFD manuals 341
F.3 Documents on the Internet 341

1 Safety precautions

1.1 What this chapter contains

Read this manual carefully and follow all safety precautions before moving, installing, operating and servicing the product. Otherwise, equipment damage or physical injury or death may be caused.

We shall not be liable or responsible for any equipment damage or physical injury or death caused due to your or your customers' failure to follow the safety precautions.

1.2 Safety definition

Danger: Severe personal injury or even death can result if related requirements are not followed.

Warning: Personal injury or equipment damage can result if related requirements are not followed.

Note: Actions taken to ensure proper running.

Trained and qualified professionals: People operating the equipment must have received professional electrical and safety training and obtained the certificates, and must be familiar with all steps and requirements of equipment installing, commissioning, running and maintaining and capable to prevent any emergencies.

1.3 Warning

Warnings caution you about conditions that can result in severe injury or death and/or equipment damage and advice on how to prevent dangers. The following table lists the warning symbols in this manual.

No.	Name	Description	Abbreviation
 Danger	Danger	Severe personal injury or even death can result if related requirements are not followed.	
 Warning	Warning	Personal injury or equipment damage can result if related requirements are not followed.	
 Forbid	Electrostatic sensitive	The PCBA may be damaged if related requirements are not followed.	
 Hot sides	Hot sides	Do not touch. The VFD base may become hot.	
	Electric shock	As high voltage still presents in the bus capacitor after power off, wait for at least five minutes (or 15 min / 25 min, depending on the warning symbols on the machine) after power off to prevent electric shock.	
	Read manual	Read the operation manual before operating the equipment.	

No.	Name	Description	Abbreviation
Note	Note	Actions taken to ensure proper running.	**Note**

1.4 Safety guidelines

<table>
<tr><td></td><td>

Only trained and qualified professionals are allowed to carry out related operations.
Do not perform wiring, inspection or component replacement when power supply is applied. Ensure all the input power supplies have been disconnected before wiring or inspection, and wait for at least the time designated on the VFD or until the DC bus voltage is less than 36V. The minimum waiting time is listed in the following.

<table>
<tr><th colspan="2">VFD model</th><th>Minimum waiting time</th></tr>
<tr><td>380V</td><td>1.5kW–110kW</td><td>5 minutes</td></tr>
<tr><td>380V</td><td>132kW–315kW</td><td>15 minutes</td></tr>
<tr><td>380V</td><td>355kW and higher</td><td>25 minutes</td></tr>
</table>
</td></tr>
<tr><td></td><td>

Do not refit the VFD unless authorized; otherwise fire, electric shock or other injury may result.

</td></tr>
<tr><td></td><td>

The base may become hot when the machine is running. Do not touch. Otherwise, you may get burnt.

</td></tr>
<tr><td></td><td>

The electrical parts and components inside the VFD are electrostatic sensitive. Take measurements to prevent electrostatic discharge when performing related operations.

</td></tr>
</table>

1.4.1 Delivery and installation

<table>
<tr><td></td><td>

Do not install the VFD on inflammables. In addition, prevent the VFD from contacting or adhering to inflammables.
Do not run the VFD if it is damaged or incomplete.
Do not contact the VFD with damp objects or body parts. Otherwise, electric shock may result.

</td></tr>
<tr><td></td><td>

Do not push the VFD sidewards during moving.
Prevent the VFD from tipping sidewards.

</td></tr>
</table>

Note:

- Select appropriate tools for VFD delivery and installation to ensure the safe and proper running and avoid physical injury or death. To ensure personal safety, take mechanical protective measures like wearing safety shoes and working uniforms.
- Protect the VFD against physical shock or vibration during the delivery and installation.
- Do not carry the VFD only by its front cover as the cover may fall off.
- The installation site must be away from children and other public places.
- When the altitude exceeds 1000m, derate by 1% for every increase of 100m.
- Use the VFD in proper environments. (For details, see section 4.2.1 Installation environment.)

- Prevent the screws, cables and other conductive parts from falling into the VFD.
- As leakage current of the VFD during running may exceed 3.5mA, ground properly and ensure the grounding resistance is less than 10Ω. The conductivity of PE grounding conductor is the same as that of the phase conductor (with the same cross sectional area).
- R, S and T are the power input terminals, and U, V and W are the output motor terminals. Connect the input power cables and motor cables properly; otherwise, VFD damage may occur.

1.4.2 Commissioning and running

<table>
<tr>
<td></td>
<td>
• Cut off all power supplies connected to the VFD before terminal wiring, and wait for at least the time designated on the VFD after disconnecting the power supplies.
• High voltage presents inside the VFD during running. Do not carry out any operation on the VFD during running except for keypad setup. The VFD control terminals form extra-low voltage (ELV) circuits. Therefore, you need to prevent the control terminals from connecting to accessible terminals of other devices when there is no isolation protection mechanism configured.

• The VFD may start up by itself when power-off restart is enabled (P01.21=1). Do not get close to the VFD and motor.
• The VFD cannot be used as an "Emergency-stop device".
• The VFD cannot act as an emergency brake for the motor; it is a must to install a mechanical braking device.
• During driving a permanent magnet SM, besides above-mentioned items, the following work must be done before installation and maintenance:
1. All input power supplies have been disconnected, including the main power and control power.
2. The permanent-magnet SM has been stopped, and the voltage on output end of the VFD is lower than 36V.
3. After the permanent-magnet SM has stopped, wait for at least the time designated on the VFD, and ensure the voltage between + and - is lower than 36V.
4. During operation, it is a must to ensure the permanent-magnet SM cannot run again by the action of external load; it is recommended to install an effective external braking device or cut off the direct electrical connection between the permanent-magnet SM and the VFD.
</td>
</tr>
</table>

Note:

- Do not switch on or switch off the input power supplies of the VFD frequently.
- If the VFD has been stored without use for a long time, perform capacitor reforming (described in chapter 8 Maintenance), inspection and pilot run for the VFD before the reuse.
- Close the VFD front cover before running; otherwise, electric shock may occur.

1.4.3 Maintenance and component replacement

<table>
<tr>
<td></td>
<td>• Only trained and qualified professionals are allowed to perform maintenance, inspection, and component replacement for the VFD.</td>
</tr>
</table>

	• Disconnect all power supplies connected to the VFD before terminal wiring, and wait for at least the time designated on the VFD after disconnecting the power sources. • During maintenance and component replacement, take measures to prevent screws, cables and other conductive matters from falling into the internal of the VFD.

Note:

- Use proper torque to tighten screws.
- During maintenance and component replacement, keep the VFD and its parts and components away from combustible materials and ensure they have no combustible materials adhered.
- Do not carry out insulation voltage-endurance test on the VFD, or measure the control circuits of the VFD with a megohmmeter.
- During maintenance and component replacement, take proper anti-static measures on the VFD and its internal parts.

1.4.4 Disposal

	• The VFD contains heavy metals. Dispose of a scrap VFD as industrial waste.
	• Dispose of a scrap product separately at an appropriate collection point but not place it in the normal waste stream.

2 Quick startup

2.1 What this chapter contains

This chapter introduces the basic installation and commissioning rules that you need to follow to realize quick installation and commissioning.

2.2 Unpacking inspection

Check the following after receiving the product.

• Whether the packing box is damaged or dampened. If any problems are found, contact the local Kruger dealer or office.
• Whether the model identifier on the exterior surface of the packing box is consistent with the purchased model. If any problems are found, contact the local Kruger dealer or office.
• Whether the interior surface of the packing box is abnormal, for example, in wet condition, or whether the enclosure of the VFD is damaged or cracked. If any problems are found, contact the local Kruger dealer or office.
• Whether the VFD nameplate is consistent with the model identifier on the exterior surface of the packing box. If any problems are found, contact the local Kruger dealer or office.
• Whether the accessories (including the manual, keypad, and expansion card) inside the packing box are complete.If any problems are found, contact the local Kruger dealer or office.

If any problems are found, contact the local dealer or Kruger office.

2.3 Checking before use

Check the following before using the VFD.

• Mechanical type of the load to be driven by the VFD to verify whether the VFD will be overloaded during work. Whether the power class of the VFD needs to be increased.
• Whether the actual running current of the motor is less than the rated current of the VFD.
• Whether the control accuracy required by the load is the same as that is provided by the VFD.
• Whether the grid voltage is consistent with the rated voltage of the VFD.
• Check whether expansion cards are needed for selected functions.

2.4 Environment checking

Check the following before the actual installation and use the VFD:

Note: For a cabinet-built VFD, the ambient temperature is the air temperature inside the cabinet.

• Whether the actual ambient temperature exceeds 40°C. When the temperature exceeds 40°C, derate by 1% for every increase of 1°C. Do not use the VFD when the ambient temperature exceeds 50°C.

Note: When the VFD is built in a cabinet, the ambient temperature is the temperature of air in the cabinet.
• Whether the actual ambient temperature is lower than -10°C. If the temperature is lower than -10°C, use heating devices. **Note:** When the VFD is built in a cabinet, the ambient temperature is the temperature of air in the cabinet.
• Whether the altitude of the application site exceeds 1000m. When the installation site altitude exceeds 1000m, derate by 1% for every increase of 100m.
• Whether the actual environment humidity exceeds 90% or condensation occurs. If yes, take additional protective measures.
• Whether there is direct sunlight or biological invasion in the environment where the VFD is to be used. If yes, take additional protective measures.
• Whether there is dust or inflammable and explosive gas in the environment where the VFD is to be used. If yes, take additional protective measures.

2.5 Checking after installation

Check the following after the VFD installation is complete.

Note: For a cabinet-built VFD, the ambient temperature is the air temperature inside the cabinet.

• Whether the input power cables and motor cables meet the current-carrying capacity requirements of the actual load.
• Whether correct accessories are selected for the VFD, the accessories are correctly and properly installed, and the installation cables meet the capacity carrying requirements of all components (including the input reactor, input filter, output reactor, output filter, and DC reactor).
• Whether the VFD is installed on non-flammable materials and the heat-radiating accessories (such as reactors) are away from flammable materials.
• Whether all control cables and power cables are run separately and Whether the routing complies with EMC requirement.
• Whether all grounding systems are properly grounded according to the requirements of the VFD.
• Whether all the installation clearances of the VFD meet the requirements in the manual.
• Whether the installation mode conforms to the instructions in the operation manual. It is recommended that the VFD be installed uprightly.
• Whether the external connection terminals of the VFD are tightly fastened and the torque is appropriate.
• Whether there are screws, cables, or other conductive items left in the VFD. If yes, get them out.

2.6 Basic commissioning

Complete the basic commissioning as follows before the actual use of the VFD:

• According to the actual motor parameters, select the motor type, set motor parameters, and select the VFD control mode.
• Check whether autotuning is required. If possible, de-couple the VFD from the motor load to start dynamic parameter autotuning. If the VFD cannot be de-coupled from the load, perform static autotuning.
• Adjust the ACC/DEC time according to the actual work condition of the load.
• Perform device commissioning by means of jogging and check whether the motor rotational direction is correct. If not, change the rotation direction by swapping any two phase wires of the motor.
• Set all control parameters and then perform actual run.

3 Product overview

3.1 What this chapter contains

This chapter mainly introduces the working principles, product features, layouts, nameplates and model designation rules.

3.2 Basic principles

The VFD is used to control asynchronous AC induction motors and permanent magnetic synchronous motors. The following figure shows the main circuit diagram of the VFD. The rectifier converts 3PH AC voltage into DC voltage, the capacitor bank of intermediate circuit stabilizes the DC voltage, and then the inverter converts DC voltage into AC voltage that can be used by an AC motor.

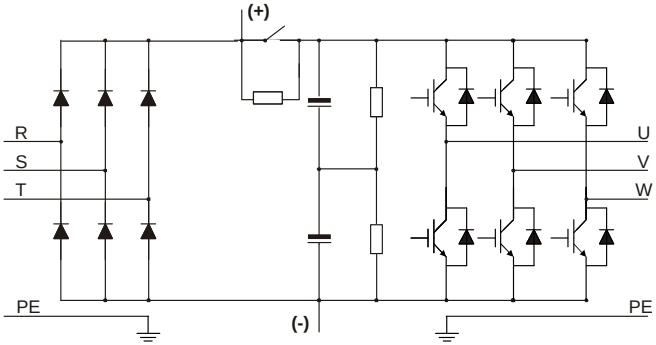

Figure 3-1 Main circuit diagram

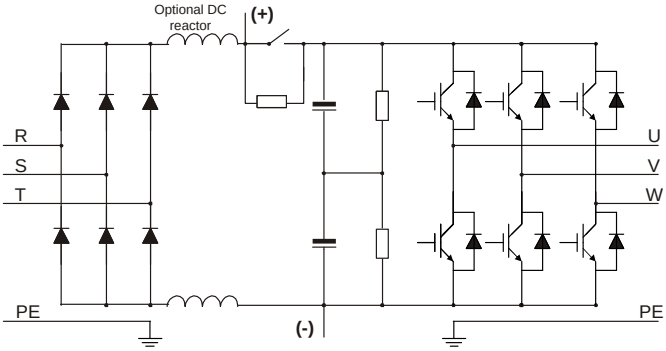

Figure 3-2 Main circuit for 400–500kW (included) VFD models (with built-in DC reactors)

Note: Built-in DC reactors are standard parts only for 400–500kW VFD models.

3.3 Product specifications

Description		Specifications
Power input	Input voltage (V)	AC 3PH 380–480V. Rated voltage: 380V
	Allowed voltage transient fluctuation	-15%–+10%
	Input current (A)	See section 3.6 Product ratings.
	Input frequency (Hz)	50Hz or 60Hz; Allowed range: 47–63Hz
Power output	Output voltage(V)	0–Input voltage (V)
	Output current(A)	See section 3.6 Product ratings.
	Output power (kW)	See section 3.6 Product ratings.
	Output frequency (Hz)	0–400 Hz
Technical control performance	Control mode	Space voltage vector control, and sensorless vector control (SVC)
	Motor type	Asynchronous motor (AM) and permanent magnetic synchronous motor (SM)
	Speed ratio	For asynchronous motors (AMs): 1:200 (SVC); for synchronous motors (SMs): 1:20 (SVC)
	Speed control accuracy	± 0.2% (SVC)
	Speed fluctuation	± 0.3% (SVC)
	Torque response	< 20ms (SVC)
	Torque control accuracy	± 10% (SVC)
	Overload capacity	Able to run at 110% of rated current for 1min, and an overload allowed for every 5min.
Running control performance	Frequency setting method	Settings can be implemented through digital, analog, pulse frequency, multi-step speed run, simple PLC, PID, and communication. Settings can be combined and the setting channels can be switched.
	Automatic voltage regulation	The output voltage can be kept constant although the grid voltage changes.
	Fault protection	Many protection functions available, such as protection against overcurrent, overvoltage, undervoltage, overtemperature, and phase loss
	Speed tracking restart	Used to implement impact-free smooth startup for rotating motors
Peripheral interface	Terminal analog input resolution	No more than 20mV

Description		Specifications
	Terminal digital input resolution	No more than 2ms
	Analog input	Two inputs. AI1: 0(2)–10V / 0(4)–20mA; AI2: -10 – +10V
	Analog output	Two outputs. AO0/AO1: 0(2)–10V/0(4)–20mA
	Digital input	Five regular inputs. Max. frequency: 1kHz; internal impedance: 3.3kΩ One high-speed input. Max. frequency: 50kHz
	Digital output	One Y terminal open collector output, sharing the terminal with S4. The function can be selected through a jumper.
	Relay output	Two programmable relay outputs. RO1A: NO; RO1B: NC; RO1C: common RO2A: NO; RO2B: NC; RO2C: common Contact capacity: 3A/AC250V, 1A/DC30V
	Extended interfaces	Two extended interfaces: SLOT1 and SLOT2 Supporting communication expansion cards, I/O cards and so on
Other	Mounting method	Supports wall-mounting, floor-mounting and flange-mounting.
	Temperature of running environment	-10°C – +50°C. Derating is required when the ambient temperature exceeds 40°C.
	IP rating	IP20 for 200kW and lower IP00 for 220kW and higher
	Pollution degree	Degree 2
	Cooling method	For 1.5kW: Natural air cooling For 2.2kW and higher: Forced air cooling

3.4 Product nameplate

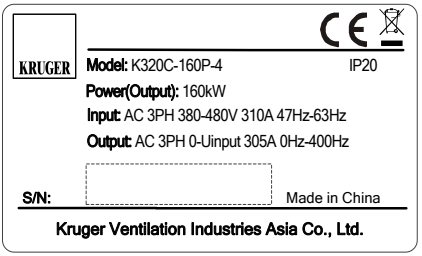

Figure 3-3 Product nameplate

Note: The preceding shows a standard product nameplate example. The nameplate has markings such as "CE", "TUV", and "IP20" depending on the actual certification result.

3.5 Model designation code

A model designation code contains product information. You can find the model designation code on the VFD nameplate.

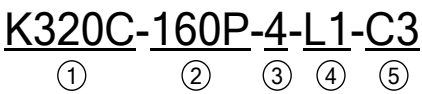

Figure 3-4 Model description

Field	No.	Field description	Content
Product series abbreviation	①	Product series abbreviation	K: Kruger 3: Three phase 20: ingress protection (IP) rating, IP20 C: Customize design for Fan and Pump
Rated power	②	Power range	160: 160kW P: Variable torque load
Voltage class	③	Voltage class	4: AC 3PH 380V–480V Rated voltage: 380V
Reactor configuration	④	Reactor configuration	Default: Empty L1: with built-in DC reactor, applicable to 11–500kW models. L3: with built-in DC reactor and output AC reactor, applicable to 220kW and higher models. Ln: L1 or L3 selectable **Note:** DC reactors are standard parts for 400–500kW models.
Built-in filter configuration	⑤	Built-in filter configuration	Empty: with built-in C3 filter applicable to 160kW –500kW without built-in C3/C2 filter applicable to 1.5-132kW C2: with built-in C2 filter, applicable to 1.5–22kW models C3: with built-in C3 filter, applicable to 30–132kW models

3.6 Product ratings

Table 3-1 Ratings for AC 3PH 380V models

VFD model	Output power (kW)	Input current (A)	Output current (A)
K320C-1R5P-4(-C2)	1.5	5 (5)	3.7
K320C-003P-4(-C2)	2.2	6 (6)	5
K320C-004P-4(-C2)	4	15 (15)	9.5
K320C-5R5P-4(-C2)	5.5	20 (20)	13
K320C-7R5P-4(-C2)	7.5	27 (27)	17
K320C-011P-4(-L1/-C2)	11	35 (35)	25
K320C-015P-4(-L1/-C2)	15	44 (44)	32
K320C-018P-4(-L1/-C2)	18	46 (46)	38
K320C-022P-4(-L1/-C2)	22	54 (54)	45
K320C-030P-4(-L1)(-C3)	30	75 (56)	60
K320C-037P-4(-L1)(-C3)	37	90 (69)	75
K320C-045P-4(-L1)(-C3)	45	108 (101)	92
K320C-055P-4(-L1)(-C3)	55	142 (117)	115
K320C-075P-4(-L1)(-C3)	75	177 (149)	150
K320C-090P-4(-L1)(-C3)	90	200 (171)	180
K320C-110P-4(-L1)(-C3)	110	240 (205)	215
K320C-132P-4(-L1)(-C3)	132	278 (235)	250
K320C-160P-4(-L1)	160	310 (296)	305
K320C-185P-4(-L1)	185	335 (320)	330
K320C-200P-4(-L1)	200	385 (368)	380
K320C-220P-4(-Ln)	220	430 (411)	425
K320C-250P-4(-Ln)	250	465 (444)	460
K320C-280P-4(-Ln)	280	540 (485)	530
K320C-315P-4(-Ln)	315	605 (550)	600
K320C-355P-4(-Ln)	355	655 (600)	650
K320C-400P-4(-Ln)	400	660	720
K320C-450P-4(-Ln)	450	745	820
K320C-500P-4(-Ln)	500	800	860

Note:

- *n* = 1 or 3
- The parentheses "()" in the "VFD model" column are used to distinguish models when selecting different product configurations. Please note that 11–22kW models can only be configured with one from the built-in DC reactor (L1) and the built-in C2 filter.
- The rated output current is the output current when the output voltage is 380V.
- The data in the "Input current" column are measured at an input voltage of 380V.
  The data in "()" are measured when a DC reactor is configured.

3.7 Structure

The VFD structure is shown in the following figure (taking the 380V 45kW VFD model as an example).

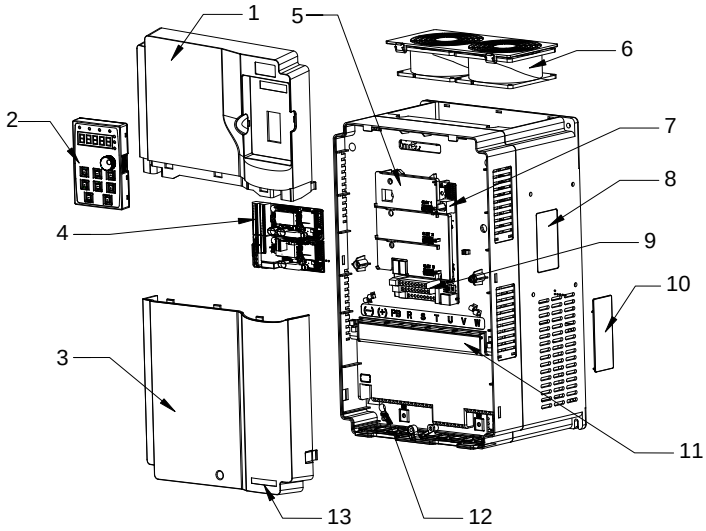

Figure 3-5 Product structure

No.	Name	Description
1	Upper cover	Protects internal components and parts.
2	Keypad	For details, see section 5.2 Keypad operation.
3	Lower cover	Protects internal components and parts.
4	Expansion card	Optional. For details, see Appendix A Expansion card.
5	Baffle of control board	Protects the control board and install expansion cards.
6	Cooling fan	For details, see chapter 8 Maintenance.
7	Keypad interface	Connects the keypad.
8	Nameplate	For details, see chapter 3 Product overview.
9	Control circuit terminals	For details, see chapter 4 Installation guidelines.
10	Cover plate of heat emission hole	Optional. Cover plate can upgrade protection level, however, as it will also increase internal temperature, derated use is required.
11	Main circuit terminal	For details, see chapter 4 Installation guidelines.
12	POWER indicator	Power supply indicator
13	K320C product series label	For details, see section 3.5 Model designation code.

4 Installation guidelines

4.1 What this chapter contains

This chapter describes the mechanical installation and electrical installation of the VFD.

	• Only trained and qualified professionals are allowed to carry out the operations mentioned in this chapter. Please carry out operations according to instructions presented in chapter **1 "Safety precautions"**. Ignoring these safety precautions may lead to physical injury or death, or device damage. • Ensure the VFD power has been disconnected before installation. If the VFD has been powered on, disconnect the VFD power and wait for at least the time specified on the VFD, and ensure the POWER indicator is off. You are recommended to use a multimeter to check and ensure the VFD DC bus voltage is below 36V. • The VFD installation must be designed and done according to applicable local laws and regulations. Kruger does not assume any liability whatsoever for any VFD installation which breaches local laws or regulations. If recommendations given by Kruger are not followed, the VFD may experience problems that the warranty does not cover.

4.2 Mechanical installation

4.2.1 Installation environment

The installation environment is essential for the VFD to operate with best performance in the long run. The Installation the VFD in an environment that meets the following requirements.

Environment	Condition
Installation site	Indoor
Ambient temperature	• -10–+50°C. • When the ambient temperature exceeds 40°C, derate by 1% for every increase of 1°C. • Do not use the VFD when the ambient temperature exceeds 50°C. • To improve reliability, do not use the VFD in the places where the temperature changes rapidly. • When the VFD is used in a closed space, such as control cabinet, use a cooling fan or air conditioner for cooling, preventing the internal temperature from exceeding the temperature required. • When the temperature is too low, if you want to use the VFD that has been idled for a long time, install an external heating device before the use to eliminate the freeze inside the VFD. Otherwise, the VFD may be damaged.
Relative humidity (RH)	• Less than 90% • Condensation is not allowed. • The max. RH cannot exceed 60% in the environment where there are corrosive gases.
Storage	-30–+60°C

Environment	Condition
temperature	
Running environment	The installation site should meet the following requirements: • Away from electromagnetic radiation sources. • Away from oil mist, corrosive gases, and combustible gases. • Without the chance for foreign objects such as metal powder, dust, oil and water to fall into the VFD (do not install the VFD onto combustible objects such as wood). • Without radioactive substances and combustible objects. • Without hazard gases or liquids. • With low salt content. • Without direct sunlight.
Altitude	• Lower than 1000m. • When the altitude exceeds 1000m, derate 1% for every increase of 100m.
Vibration	Max. ACC: 5.8m/s^2 (0.6g)
Installation direction	Install the VFD vertically to ensure good heat dissipation performance.

Note:

- The VFD must be installed in a clean and well-ventilated environment based on the IP level.
- The cooling air must be clean enough and free from corrosive gases and conductive dust.

4.2.2 Installation direction

The VFD can be installed on the wall or in a cabinet.

The VFD must be installed vertically. Check the installation position according to following requirements. For details about the outline dimensions, see Appendix C Dimension drawings.

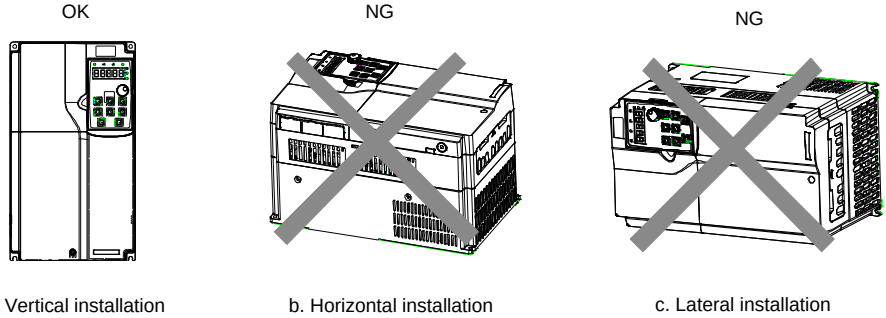

Figure 4-1 VFD installation direction

4.2.3 Mounting method

The VFD mounting method varies depending on the size. The mounting methods include wall mounting, flange mounting (applicable to 200kW and lower models), and floor mounting (applicable to 220–500kW models).

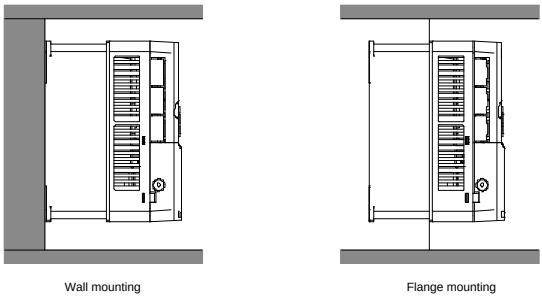

Figure 4-2 Installation mode

The mounting procedure is as follows:

1. Mark the installation hole positions. For details about the installation hole positions, see Appendix C Dimension drawings.
2. Mount the screws or bolts onto the designated positions.
3. Lean the VFD against the wall.
4. Tighten the screws.

Note: The flange mounting plate must be used for flange mounting.

4.2.4 Installing one VFD

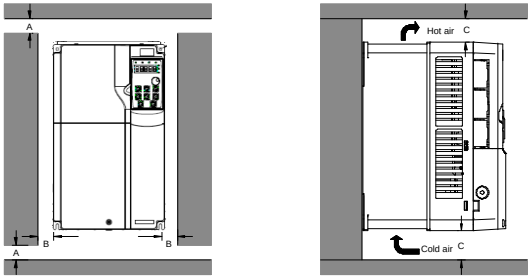

Figure 4-3 Single-unit installation

Note: For clearances B and C, each must be 100mm at least.

4.2.5 Multiple-VFD installation

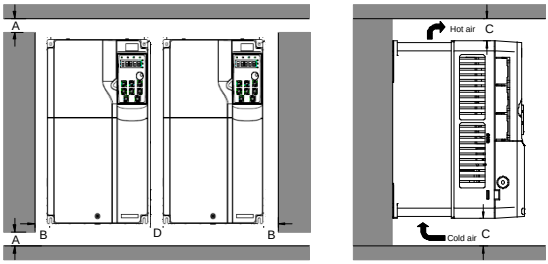

Figure 4-4 Parallel installation

Note:

- When you install VFDs in different sizes, align the top of each VFD before installation for the convenience of future maintenance.
- For clearances B, D and C, each must be 100mm at least.

4.2.6 Vertical installation

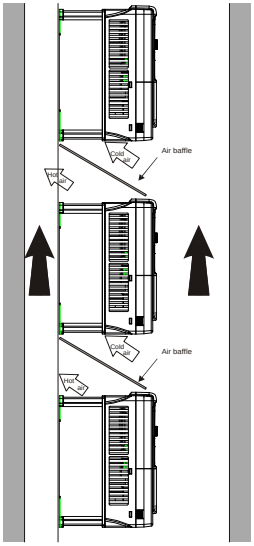

Figure 4-5 Vertical installation

Note: During vertical installation, you must install the air baffle, otherwise, the VFD will experience mutual interference, and the heat dissipation effect will be degraded.

4.2.7 Tilted installation

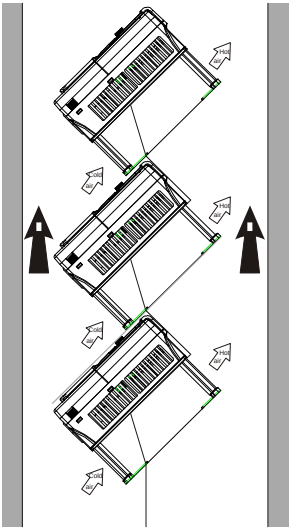

Figure 4-6 Tilted installation

Note: During tilted installation, it is a must to ensure the air inlet duct and air outlet duct are separated from each other to avoid mutual interference.

4.2.8 Cabinet installation

4.2.8.1 Heat dissipation description

K320C 220–500kW models (L1/L3) can be mounted in cabinets. Heat dissipation must be considered for the cabinet mounting method.

Figure 4-7 shows how to mount the VFD in a direct exhaust cabinet (without a fan at the top).

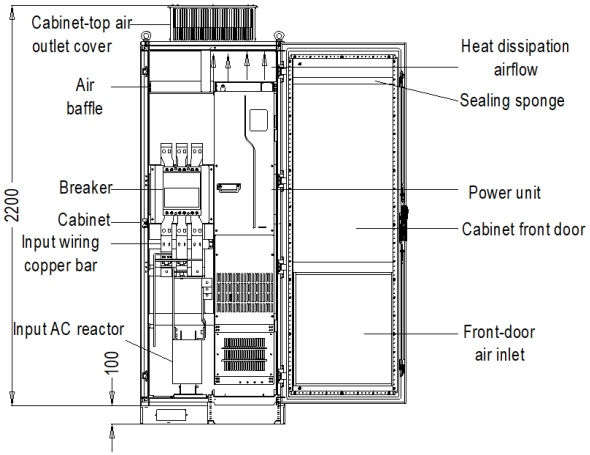

Figure 4-7 Mounting the VFD in a direct exhaust cabinet

As shown in Figure 4-8, the air duct of VFD must be isolated within the cabinet to prevent the hot air in the VFD outlet from circulating within the cabinet, and the air baffle design for isolation ensures that the hot air is discharged from the cooling holes at the top of cabinet.

Note: A 40x40 sealing sponge must be used at the position corresponding to the air baffle in the front door panel, which prevents air duct short circuit.

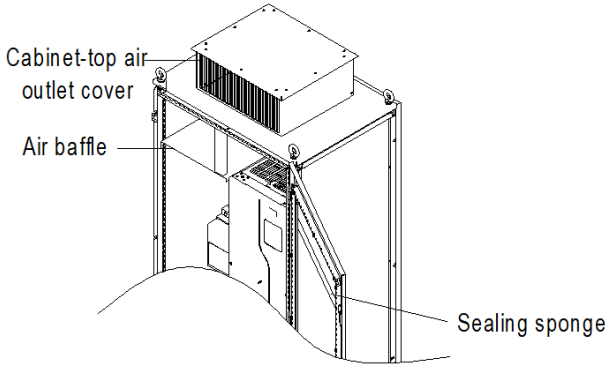

Figure 4-8 Air baffle design

4.2.8.2 Points for attention

It is recommended that the cabinet adopts the nine-fold profile cabinet (PS cabinet). Before mounting the VFD, install two bottom support crossbeams, a mounting bracket, and a mounting rail in the cabinet, and design the mounting crossbeam for VFD fixing, and reserve fixing holes on the mounting crossbeam (see C.4.3 Floor mounting dimensions for the specific location and size). Reserve the in-cabinet space for connecting the copper bar coming out of the VFD side.

The VFD can be pushed into and out of the cabinet through the rail and four casters at the VFD bottom. Note that The VFD can be pushed into or out of the cabinet only after the casters are aligned with the rail. To ensure safety, arrange two people to push the VFD into or out of the cabinet.

Note: Figure 4-9 shows the mounting space. You not only need to reserve enough heat dissipation space for the VFD but also need to consider the heat dissipation condition for other devices in the cabinet.

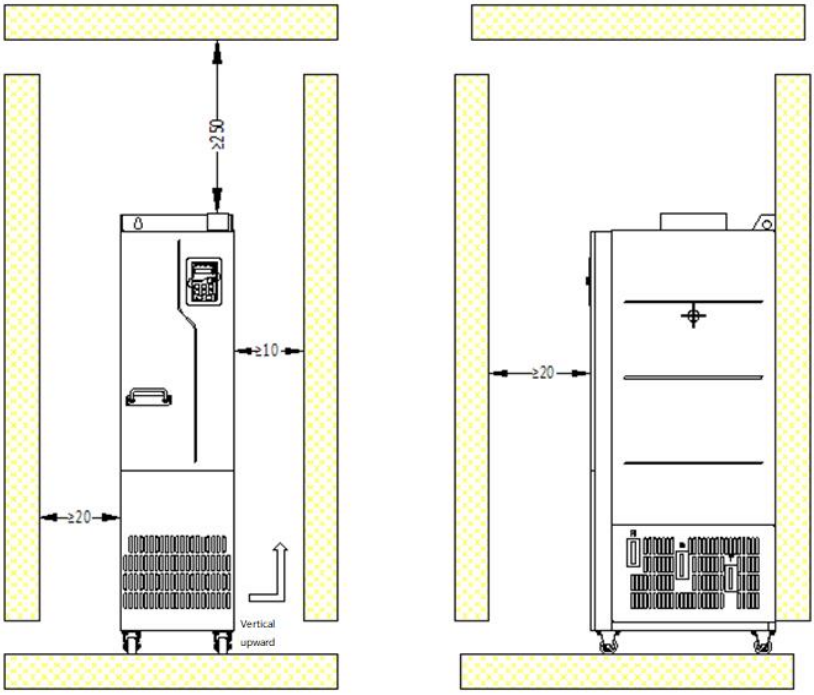

Figure 4-9 Mounting space requirements

- Cabinet air inlet actual effective area (indicating the through-hole area): For K320C-220P-4(-L*n*) and K320C-250P-4(-L*n*), the air inlet area is 42210mm^2 and the air outlet area is 67875mm^2; For K320C-280P-4(-L*n*), K320C-315P-4(-L*n*), and K320C-355P-4(-L*n*), the air inlet area is 63315mm^2 and the air outlet area is 101305mm^2; For K320C-400P-4-L*n*, K320C-450P-4-L*n*, and K320C-500P-4-L*n*, the air inlet area is 63315mm^2 and the air outlet area is 101305mm^2.
- Main circuit power line copper terminals need to be operated with tools similar to sleeve tools with extensions.
- The VFD can be pushed into or out of the cabinet only after the casters are aligned with the rail. To ensure safety, arrange two people to push the VFD into or out of the cabinet. See Figure 4-15 and Figure 4-16.
- For in-cabinet mounting, see the cabinet layout diagram Figure 4-10. The cabinet frame is 2200*800*600 (unit: mm, including the H200 cabinet ventilation top cover). To secure the in-cabinet mounting, you must mount the H100 cabinet base. The air baffle must be mounted at the top of cabinet to prevent the hot air in the VFD outlet from circulating within the cabinet. A 40X40 sealing sponge must be used at the position corresponding to the air baffle in the front door panel, which prevents air duct short circuit. In addition, air inlet vents must be made at the lower of the cabinet door.
- The bottom mounting bracket in the cabinet is a standard part, delivered along with the VFD. The bottom support crossbeam and mounting rail are optional parts.

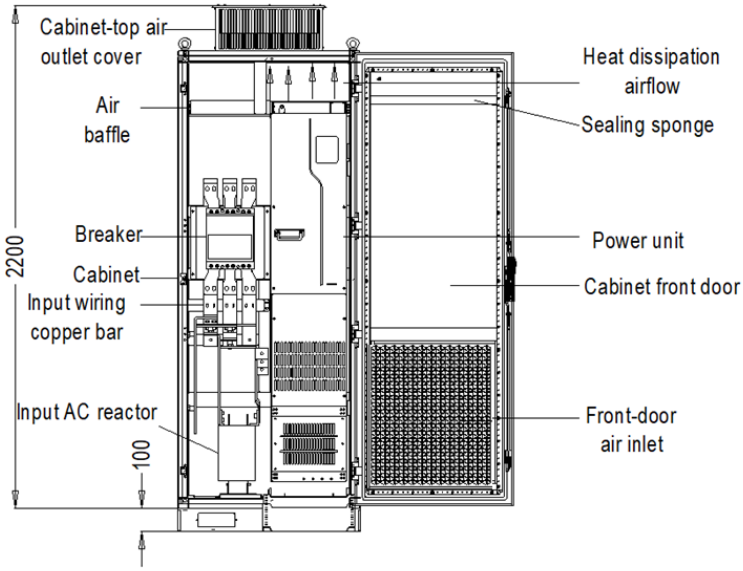

Figure 4-10 Recommended cabinet layout

4.2.8.3 In-cabinet mounting procedure

No.	Description
1	Mount the crossbeam for VFD fixing in the nine-fold profile cabinet. (See Figure 4-11.)
2	Fix the bottom support crossbeams and mounting bracket in the cabinet. (See Figure 4-13.)
3	Assemble the mounting rail (optional part) and mount it in the cabinet.
4	Arrange two people to align the VFD casters with the mounting rail and push the VFD to the cabinet. (See Figure 4-15 and Figure 4-16. Use the auxiliary rope for mounting to prevent the VFD from side tipping during the push-in or push-out.)
5	Remove the auxiliary rope for mounting, and insert screws into the fixing holes at the back, top, and bottom of VFD to fix the VFD to the mounting crossbeam. (See Figure 4-18.)
6	Remove the mounting rail when you ensure the mounting is secure.

1. Fix the mounting crossbeam and reserve fixing holes.

- The nine-fold profile cabinet (PS cabinet) is recommended. Figure 4-11 shows the enlarged view of the nine-fold profile cross section.
- When mounting a K320C 280–500kW VFD into a nine-fold profile cabinet with the depth of 600mm, you must bend the mounting crossbeam inwards (shown in Figure 4-12) to make use of the space of column, which is not necessary for the mounting into a standard cabinet with the depth of 800mm or greater.

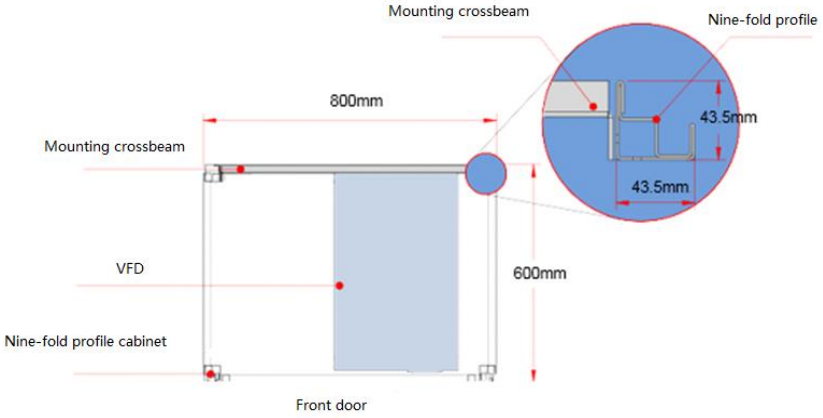

Figure 4-11 Top view of mounting a K320C 280–500kW VFD in a cabinet

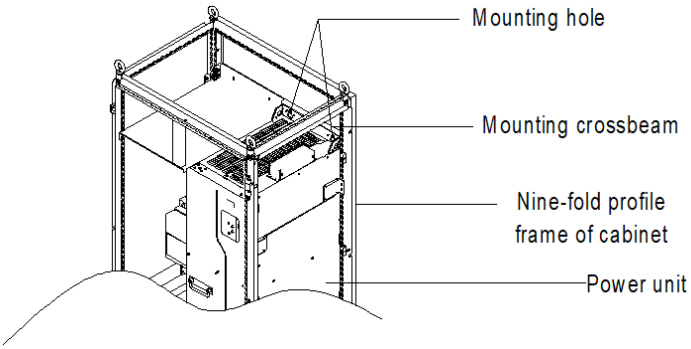

Figure 4-12 Three-dimension view of mounting a K320C 280–500kW VFD in a cabinet

2. Fix the bottom support crossbeams and mounting bracket. (See Figure 4-13.)

- Use eight M8 cage nuts to fix the two bottom support crossbeams to the base of the nine-fold profile cabinet frame. (The support crossbeams are user designed, T≥2.5mm, firmly installed.)
- Fix the mounting bracket to the nine-fold profile cabinet frame base with six M5 self-tapping screws, as shown in the following figure. For details about mounting bracket dimensions, see Figure C-15 and
- Table C-8.
- If you use another type of cabinet but not nine-fold profile cabinet, the fixing holes for the mounting bracket need to be drilled and assembled on site.

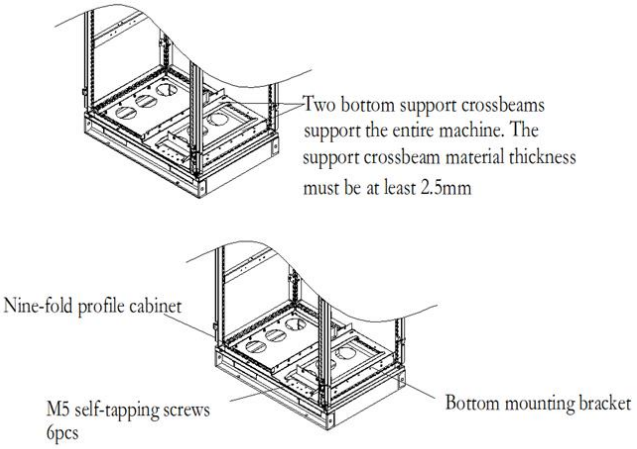

Figure 4-13 Bottom bracket mounting

3. Assemble the mounting rail (optional part).

- As shown in Figure 4-14, assemble the mounting rail, align the two front hooks with the nine-fold profile notch, and snap them into place.

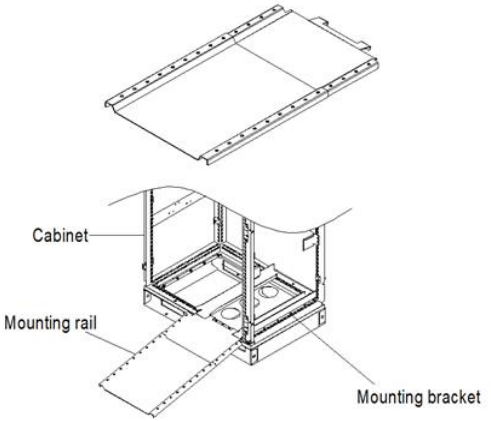

Figure 4-14 Mounting rail

4. Push the VFD into the cabinet.

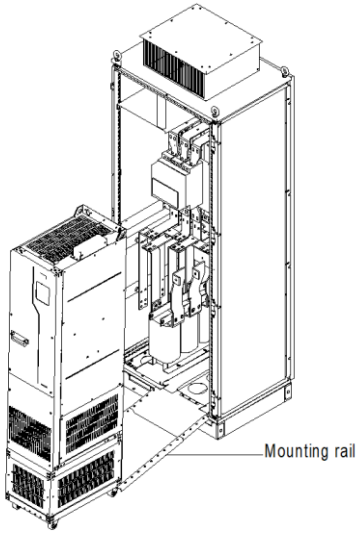

Figure 4-15 Aligning the VFD casters with the mounting rail

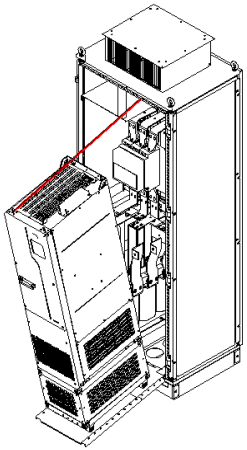

Figure 4-16 Pushing the VFD into the cabinet slowly

Note: Since the VFD barycenter is too high, use the auxiliary rope for mounting to prevent the VFD from rollover during the push-in or push-out. See the following figure.

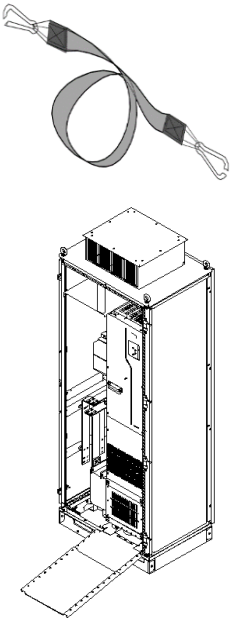

Figure 4-17 VFD already in the cabinet

5. Remove the mounting rail.

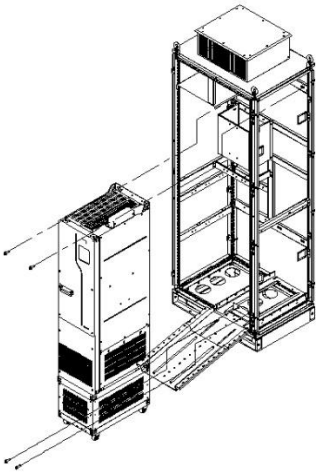

Figure 4-18 Fixing the VFD to the cabinet crossbeam through the four fixing holes at the VFD back

6. Pay attention to the following:

- Detach the VFD from the cabinet by following the preceding procedure in reverse sequence.
- When fixing the VFD, ensure that the four mounting holes of VFD have been securely connected to the mounting crossbeam.
- Use the lifting ring on the top of VFD for lifting and moving. Never apply force to the positive and negative bus terminals.

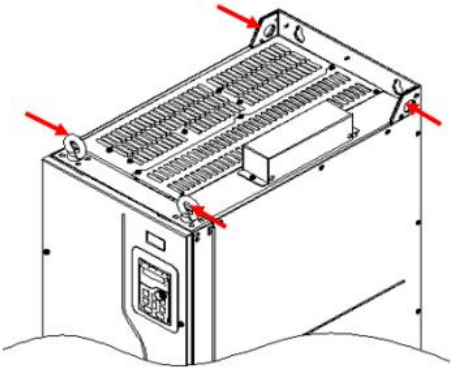

- If you need to place the VFD vertically, avoid applying force to VFD sides or placing the VFD on a tilted surface. If the tilted angle is more than 5°, the VFD may suffer rollover since the VFD has a large size and heavy weight (about 200kg).

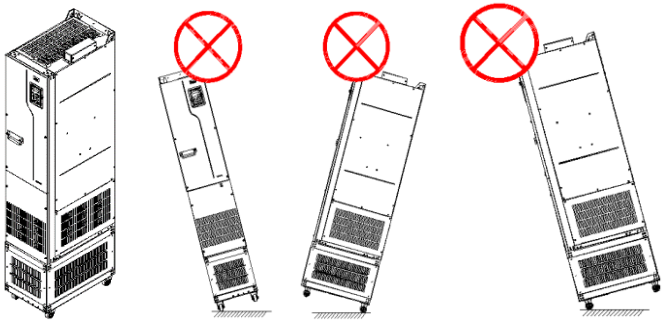

4.3 Standard wiring of the main circuit

4.3.1 Main circuit wiring diagram

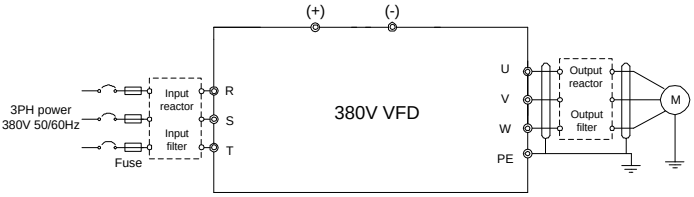

Figure 4-19 AC 3PH 380V main circuit wiring

Note:

- The fuse, input reactor, input filter, output reactor, and output filter are optional parts. For details, see "Appendix D Optional peripheral accessories".
- If you require the built-in DC reactor, purchase the VFD model with the suffix "-L1".

4.3.2 Main circuit terminal diagram

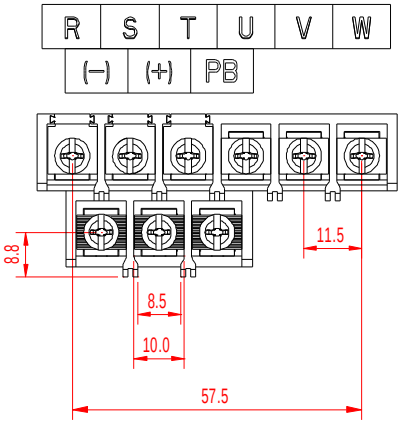

Figure 4-20 Main circuit terminal for 3PH 380V 1.5–7.5kW (unit: mm)

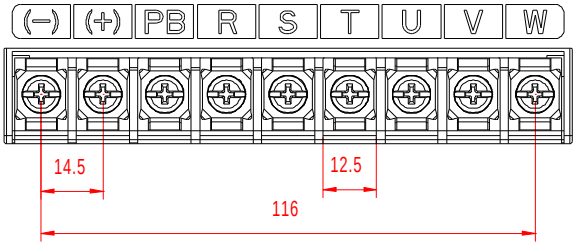

Figure 4-21 Main circuit terminal for 3PH 380V 11–15kW (unit: mm)

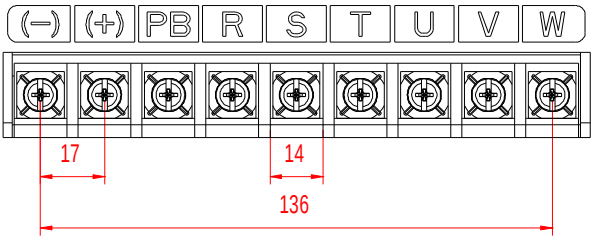

Figure 4-22 Main circuit terminal for 3PH 380V 18.5–22kW (unit: mm)

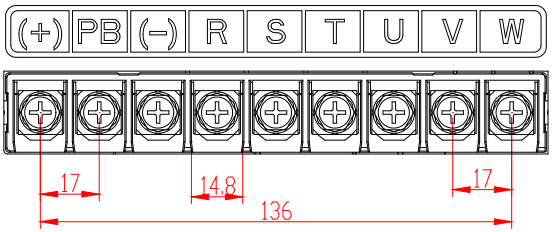

Figure 4-23 Main circuit terminal for 3PH 380V 30–37kW (unit: mm)

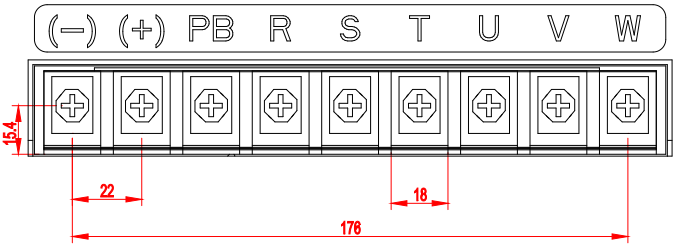

Figure 4-24 Main circuit terminal for 3PH 380V 45kW (unit: mm)

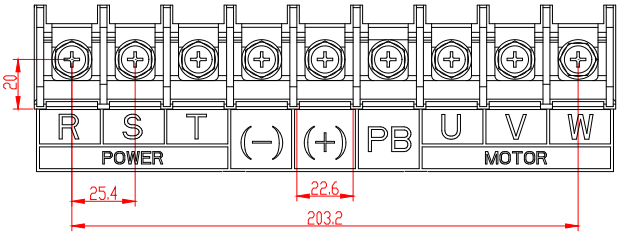

Figure 4-25 Main circuit terminal for 3PH 380V 55–90kW (unit: mm)

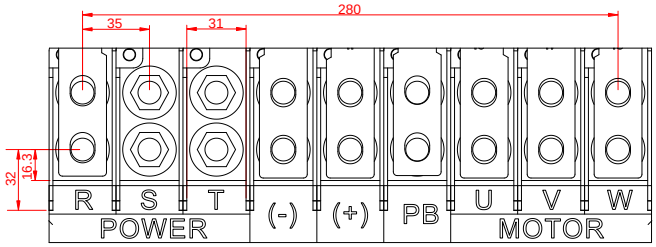

Figure 4-26 Main circuit terminal for 3PH 380V 110–132kW (unit: mm)

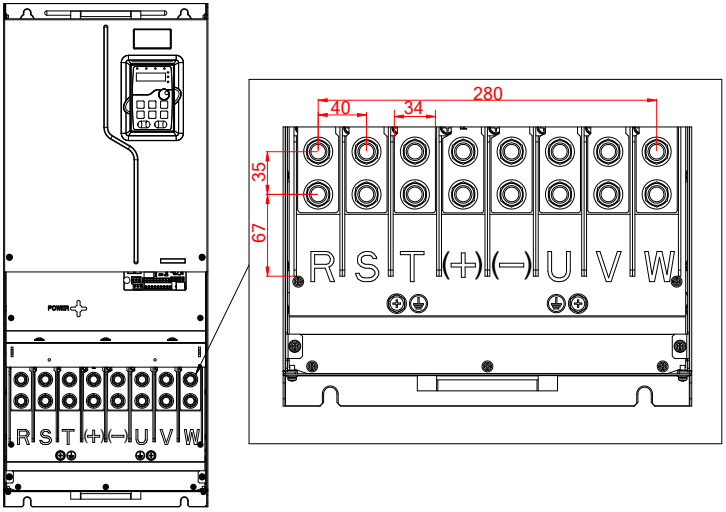

Figure 4-27 Main circuit terminal for 3PH 380V 160–200kW (unit: mm)

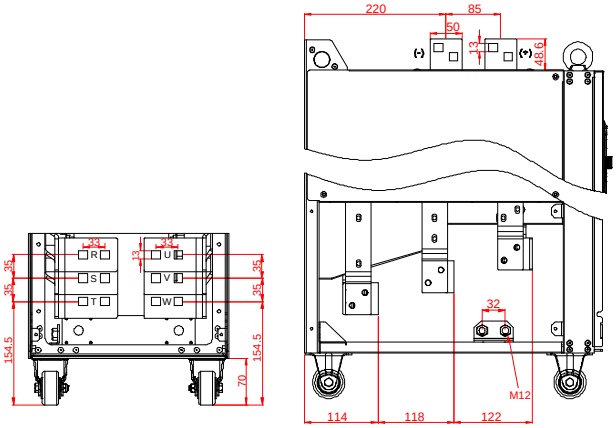

Figure 4-28 Main circuit terminal for 3PH 380V 220–250kW standard models and (-L1) models with built-in DC reactors (unit: mm)

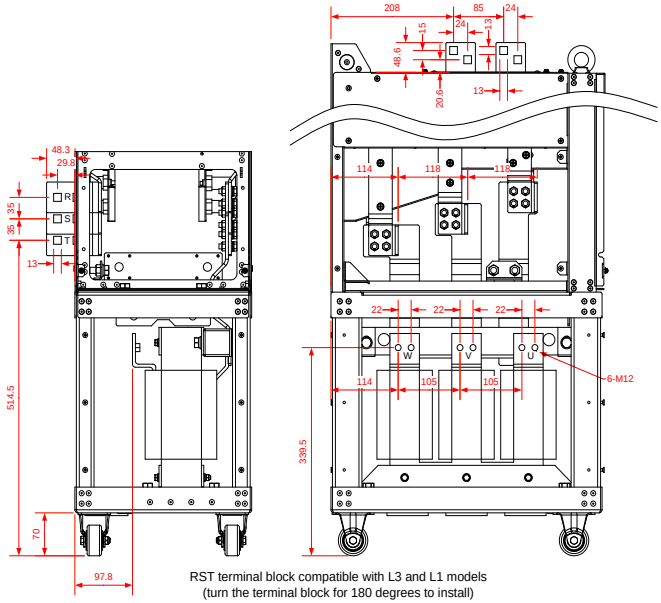

Figure 4-29 Main circuit terminal for 3PH 380V 220–250kW (-L3) models with output reactors (unit: mm)

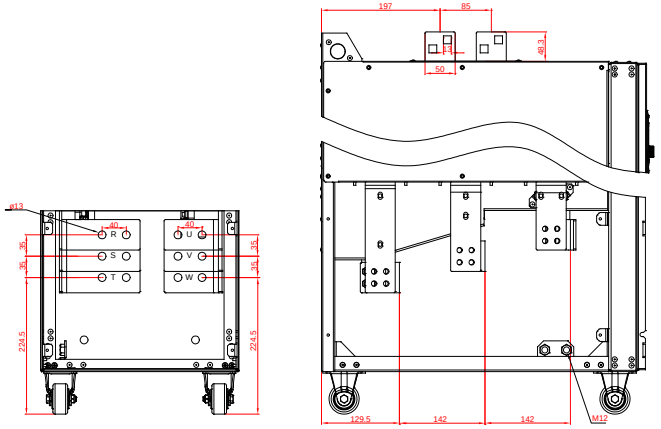

Figure 4-30 Main circuit terminal for 3PH 380V 280–355kW standard models and (-L1) models with built-in DC reactors (unit: mm)

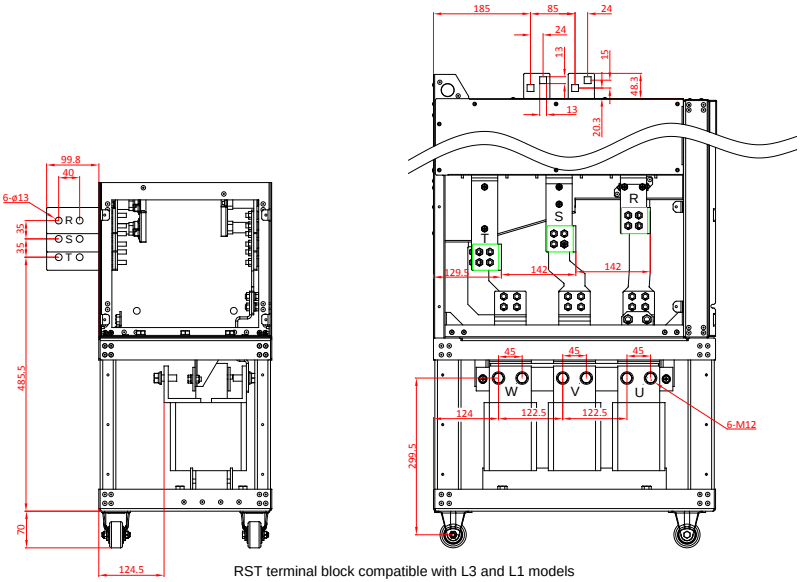

RST terminal block compatible with L3 and L1 models
(turn the terminal block for 180 degrees to install)

Figure 4-31 Main circuit terminal for 3PH 380V 280–355kW (-L3) models with output reactors (unit: mm)

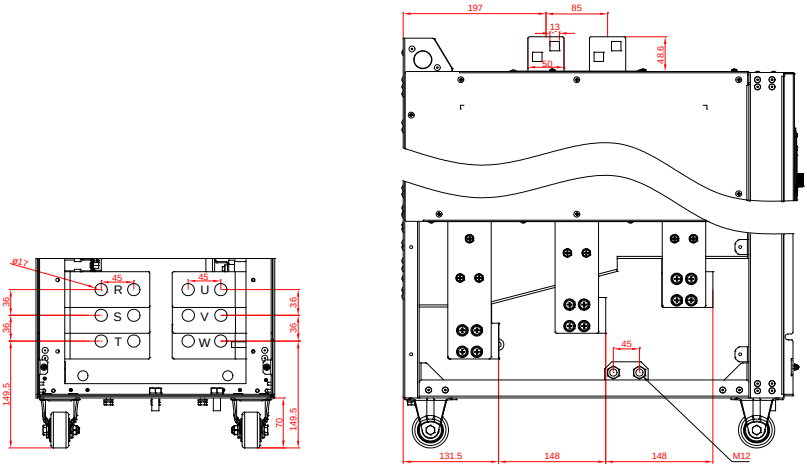

Figure 4-32 Main circuit terminal for 3PH 380V 400–500kW standard models and (-L1) models with built-in DC reactors (unit: mm)

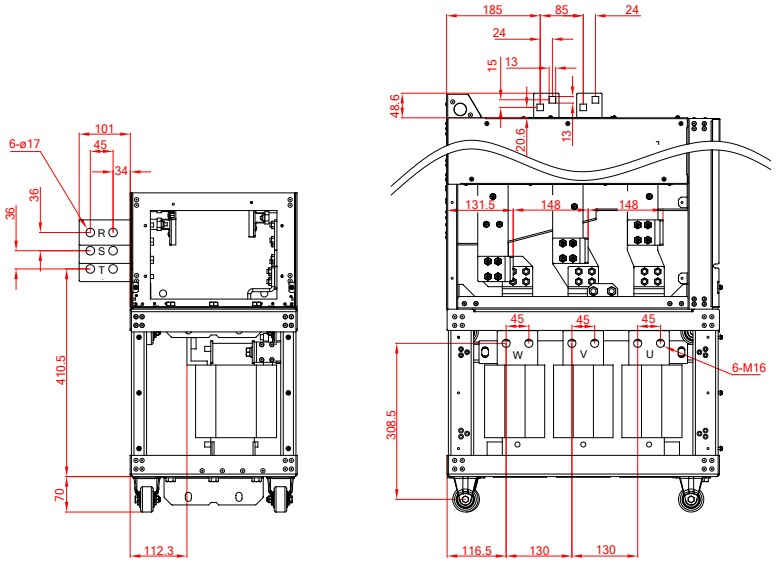

Figure 4-33 Main circuit terminal for 3PH 380V 400–500kW (-L3) models with output reactors (unit: mm)

Terminal symbol	Description
R, S, T	3PH AC input terminals, connecting to the grid
U, V, W	3PH AC output terminals, which connect to the motor in most cases
(+)	(+) and (-) can share the DC bus or connect to an external DC power supply.
(-)	
PE	Grounding terminal for safe protection; each machine must carry two PE terminals and proper grounding is required
PB	Reserved, no braking function

Note:

- It is not recommended to use asymmetrical motor cables. If there is a symmetrical grounding conductor in the motor cable besides the conductive shielded layer, ground the grounding conductor on the VFD end and motor end.
- Route the motor cable, input power cable and control cable separately.

4.3.3 Wiring procedure for main circuit terminals

1. Connect the grounding line of the input power cable to the grounding terminal (PE) of the VFD, and connect the 3PH input cable to R, S and T terminals and tighten up.
2. Connect the ground wire of the motor cable to the PE terminal of the VFD, connect the motor 3PH cable to the U, V and W terminals, and tighten up.
3. Fasten all the cables outside the VFD mechanically if allowed.

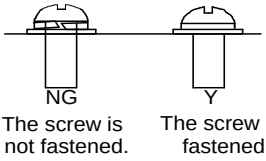

Figure 4-34 Screw installation

4.4 Standard wiring of the control circuit

4.4.1 Wiring diagram of basic control circuit

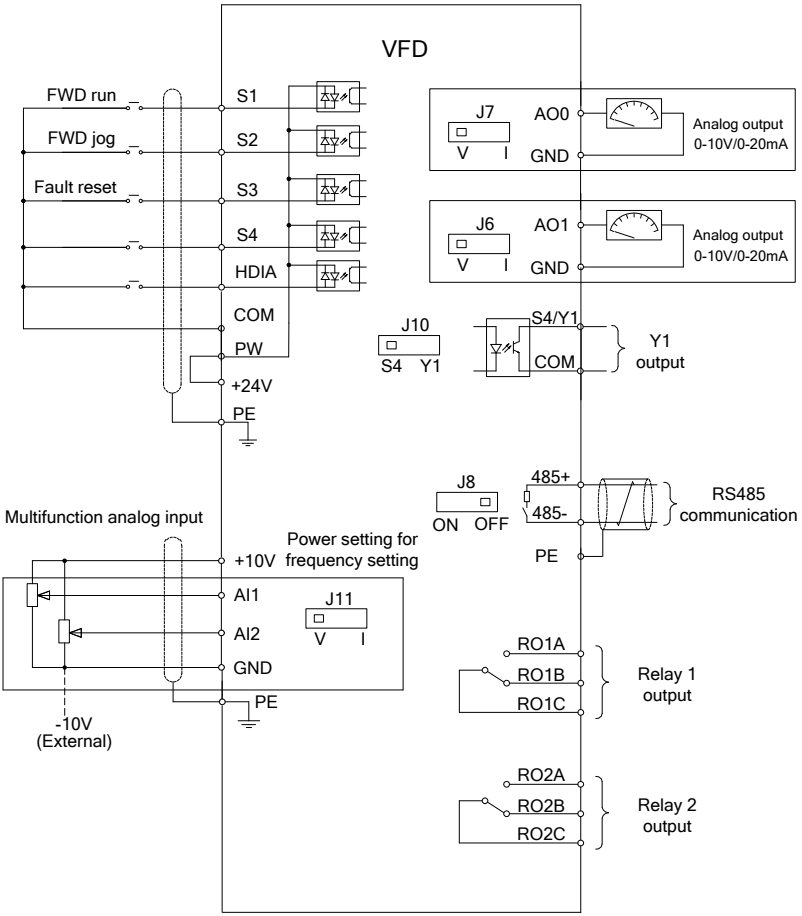

Figure 4-35 Control circuit wiring

Note: If wire-passing board outlet space is insufficient when all terminals on the control board are wired, cut the knock-out hole on the lower cover for wire outlet. If a dangerous situation occurs when the knock-out hole is cut for a purpose but not wire outlet, we will not bear any responsibility

Name	Description

Name	Description	
+10V	Locally provided +10.5V power supply	
AI1	Input range: For AI1, 0(2)–10V or 0(4)–20mA For AI2, -10V–+10V Input impedance: 20kΩ for voltage input; 250Ω for current input Whether voltage or current is used for input is set through jumper J11. Resolution: 5mV when 10V corresponds to 50Hz Error: ±0.5% when input is above 5V/10mA at 25°C	
AI2		
GND	+10.5V reference ground	
AO0	Output range: 0(2)–10V or 0(4)–20mA Whether voltage or current is used for output of AO0 and AO1 is set through jumpers J7 and J6. Error: ±0.5% when output is 5V at 25°C	
AO1		
RO1A	RO1 output; RO1A: NO; RO1B: NC; RO1C: common Contact capacity: 3A/AC250V, 1A/DC30V	
RO1B		
RO1C		
RO2A	RO2 output; RO2A: NO; RO2B: NC; RO2C: common Contact capacity: 3A/AC250V, 1A/DC30V	
RO2B		
RO2C		
COM	+24V reference ground	
Y1	Switch capacity: 50mA/30V Output frequency range: 0–1kHz Y1 and S4 share the output terminal. The selection is made through J10.	
485+	RS485 communication port, RS485 differential signal port and standard RS485 communication port must use shielded twisted pairs; the 120ohm terminal matching resistor for RS485 communication is connected through jumper J8.	
485-		
PE	Grounding terminal	
PW	Digital external power input terminal. Voltage range: 12–30V	
24V	User power supply provided by the VFD, 24V(-10%–+15%). Max. output current: 200mA	
S1	Digital input 1	• Internal impedance: 3.3kΩ • 12–30V voltage input is acceptable • Bi-direction input terminal, supporting both NPN and PNP • Max. input frequency: 1kHz • All are programmable digital input terminals, the functions of which can be set through function codes • S4 and Y1 share the output terminal. The selection is made through J10.
S2	Digital input2	
S3	Digital input3	
S4	Digital input4	
HDIA	In addition to digital input functions, the terminal can also act as a high frequency pulse input channel. Max. input frequency: 50kHz Duty ratio: 30%–70%	

4.4.2 Input/output signal connection diagram

You can select the NPN/PNP mode and internal/external power through the U-type short connector. NPN internal mode is adopted by default. NPN internal mode is adopted by default.

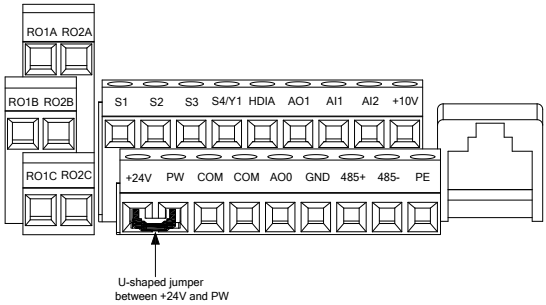

Figure 4-36 Position of U-type short connector of 3PH 380V 1.5–7.5kW VFD models.

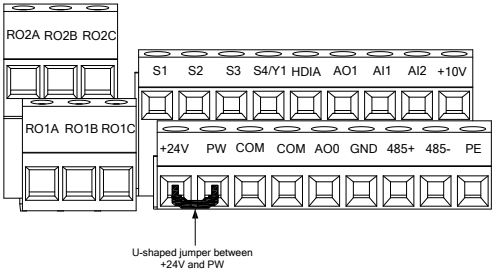

Figure 4-37 Position of U-type short connector of 3PH 380V 11–500kW VFD models.

If the input signal comes from the NPN transistor, set the U-shaped jumper between +24V and PW based on the power used according to the following figure.

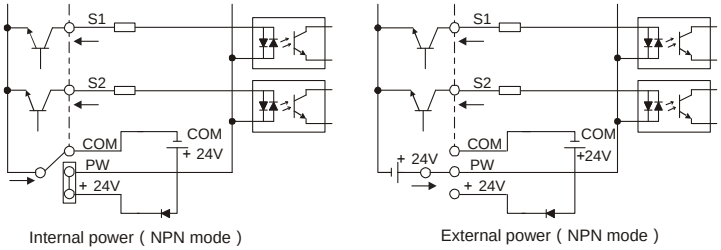

Figure 4-38 NPN mode

If the input signal comes from the PNP transistor, set the U-shaped jumper based on the power used according to Figure 4-39.

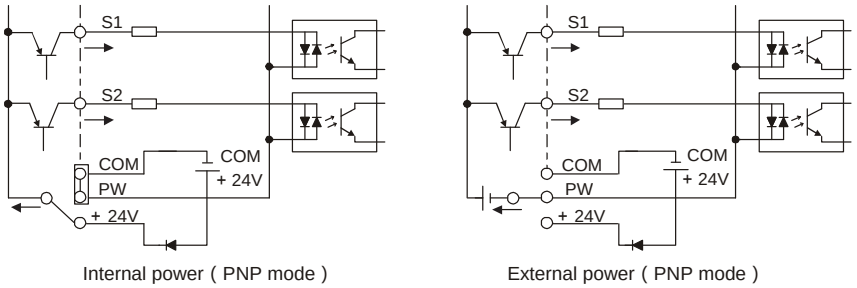

Figure 4-39 PNP mode

4.5 External optional keypad wiring

The VFD supports optional LED keypad (BOP-270) and LCD keypad (SOP-270). Note the following when externally connecting an optional keypad:

- The 1.5–22kW models use the film keypad design, which allows you to connect an external optional LED or LCD keypad to the electrical cabinet through the keypad interface A. With connection to an external keypad, the VFD support display and operation on both the local film keypad and external keypad.
- The 30kW and higher models are configured with independent keypads as standard parts. Before delivery, the local keypad of any of these models has been connected to the keypad interface B by default. If you want to move the keypad from the local to the electrical cabinet, to ease wiring, disconnect the default keypad wiring and connect the keypad through the keypad interface A. Keypad interfaces A and B cannot be connected at the same time. Otherwise, the keypad fails to operate or display properly.

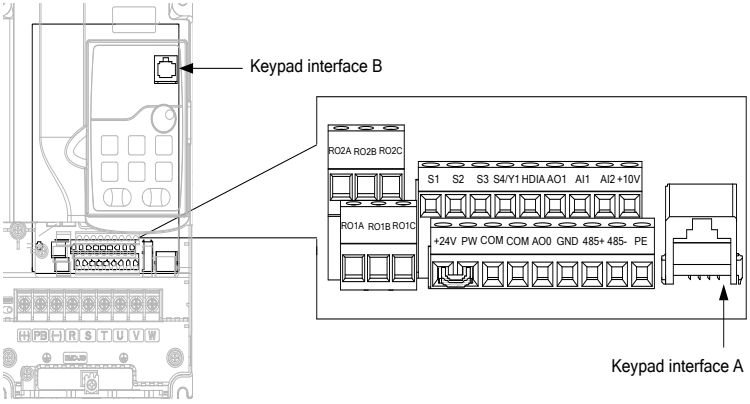

Figure 4-40 External keypad interface

4.6 Wiring protection

1. Protecting the VFD and input power cable in case of short circuit

The VFD and input power cable can be protected in case of short circuit, avoiding thermal overload.

Carry out protective measures according to the following figure.

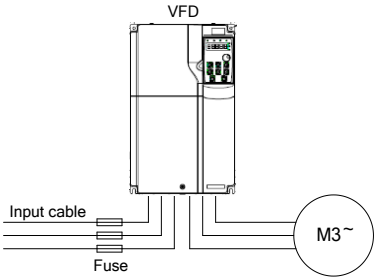

Figure 4-41 Fuse configuration

Note: Select the fuse according to the manual. In case of short circuit, the fuse protects input power cables to avoid damage to the VFD; if internal short-circuit occurs to the VFD, it can protect neighboring equipment from being damaged.

2. Protecting the motor and motor cable in case of short circuit

If the motor cable is selected based on VFD rated current, the VFD is able to protect the motor cable and motor during short circuit without other protective devices.

⚠	• If the VFD is connected to multiple motors, use a separated thermal overload switch or breaker to protect the cable and motor, which may require the fuse to cut off the short circuit current.

3. Protecting the motor against thermal overload

The motor must be protected against thermal overload. Once overload is detected, current must be cut off. The VFD is equipped with the motor thermal overload protection function, which can block output and cut off the current (if necessary) to protect the motor.

4. Bypass connection

In some critical scenarios, the power/variable frequency conversion circuit needs to be configured to ensure proper operation of the system when a fault occurs to the VFD.

In some special scenarios, such as in soft startup, power-frequency running is directly performed after the startup, which requires bypass connection.

⚠	• Do not connect any power source to the VFD output terminals U, V, and W. The voltage applied to the motor cable may cause permanent damage to the VFD.

If frequent switchover is needed, you can use the switch which carries mechanical interlock or a contactor to ensure motor terminals are not connected to input power cables and VFD output ends simultaneously.

5 Basic operation guidelines

5.1 What this chapter contains

This chapter instructs you how to use the VFD keypad and commission the VFD common functions.

5.2 Keypad operation

Kruger K320C series VFD have been equipped with LED keypads as standard configuration. You can use the keypad to control the start and stop, read status data, and set parameters of the VFD. You can also use the optional LCD keypad which supports ten-row HD display in multiple languages, with parameter copy function. Its overall size is same as the LED keypad.



Figure 5-1 Standard LED keypad



Figure 5-2 Film keypad



Figure 5-3 Optional LCD keypad

Note:

- The film keypad is a standard part for the 1.5–22kW models. When installing the keypad externally, you can purchase the independment LED keypad and bracket.
- The external keypad is a standard part for the 30–500kW models. When installing the keypad externally, you just need to purchase the bracket.

5.3 LED keypad (BOP-270) display and operation

The VFD keypad can display the stopped-state parameters, running-state parameters, fault alarm status, and function parameter editing status.

You can operate the VFD by using the keypad. For details about function code descriptions, see the function code list.

Table 5-1 LED keypad (BOP-270) component description

<table>
<tr><th>No.</th><th>Name</th><th colspan="3">Description</th></tr>
<tr><td rowspan="4">1</td><td rowspan="4">Status indicator</td><td>RUN/TUNE</td><td colspan="2">VFD running status indicator.
Off: The VFD is stopped.
Blinking: The VFD is autotuning parameters.
On: The VFD is running.</td></tr>
<tr><td>FWD/REV</td><td colspan="2">Forward or reverse running indicator.
LED off: The VFD is running forward.
LED on: The VFD is running reversely.</td></tr>
<tr><td>LOCAL/REMOT</td><td colspan="2">Indicates whether the VFD is controlled through the keypad, terminals, or communication.
Off: The VFD is controlled through the keypad.
Blinking: The VFD is controlled through terminals.
On: The VFD is controlled through remote communication.</td></tr>
<tr><td>TRIP</td><td colspan="2">Fault indicator;
LED off: in normal state
LED blinking: in pre-alarm state
LED on: in fault state</td></tr>
<tr><td rowspan="6">2</td><td rowspan="6">Unit indicator</td><td colspan="3">Unit displayed currently</td></tr>
<tr><td rowspan="5">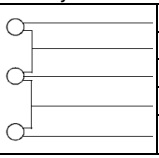</td><td>Hz</td><td>Frequency unit</td></tr>
<tr><td>RPM</td><td>Rotation speed unit</td></tr>
<tr><td>A</td><td>Current unit</td></tr>
<tr><td>%</td><td>Percentage</td></tr>
<tr><td>V</td><td>Voltage unit</td></tr>
<tr><td>3</td><td>Digital display zone</td><td colspan="3">Five-digit LED displays various monitoring data and alarm codes such as the frequency setting and output frequency.
<table>
<tr><th>Display</th><th>Means</th><th>Display</th><th>Means</th><th>Display</th><th>Means</th></tr>
<tr><td>0</td><td>0</td><td>1</td><td>1</td><td>2</td><td>2</td></tr>
<tr><td>3</td><td>3</td><td>4</td><td>4</td><td>5</td><td>5</td></tr>
<tr><td>6</td><td>6</td><td>7</td><td>7</td><td>8</td><td>8</td></tr>
<tr><td>9</td><td>9</td><td>A</td><td>A</td><td>b</td><td>b</td></tr>
<tr><td>C</td><td>C</td><td>d</td><td>d</td><td>E</td><td>E</td></tr>
<tr><td>F</td><td>F</td><td>H</td><td>H</td><td>I</td><td>I</td></tr>
<tr><td>L</td><td>L</td><td>N</td><td>N</td><td>n</td><td>n</td></tr>
<tr><td>O</td><td>O</td><td>P</td><td>P</td><td>r</td><td>r</td></tr>
<tr><td>S</td><td>S</td><td>t</td><td>t</td><td>U</td><td>U</td></tr>
<tr><td>v</td><td>v</td><td>.</td><td>.</td><td>-</td><td>-</td></tr>
</table></td></tr>
</table>

No.	Name	Description		
4	Digital potentiometer	Used for frequency regulation. For details, see the description of P08.42.		
5	Keys		Programming key	Press it to enter or exit level-1 menus or delete a parameter.
			Confirmation key	Press it to enter menus in cascading mode or confirm the setting of a parameter.
			Up key	Press it to increase data or move upward.
			Down key	Press it to decrease data or move downward.
			Right-shifting key	Press it to select display parameters rightward in the interface for the VFD in stopped or running state or to select digits to change during parameter setting.
			Run key	Press it to run the VFD when using the keypad for control.
			Stop/ Reset key	Press it to stop the VFD that is running. The function of this key is restricted by P07.04. In fault alarm state, this key can be used for reset in any control modes.
			Multifunction shortcut key	The function is determined by P07.02.

5.3.1 Displaying stopped-state parameters

When the VFD is in stopped state, the keypad displays stopped-state parameters. See Figure 5-4.

In the stopped state, various kinds of parameters can be displayed. You can determine which parameters are displayed in stopped state by setting function code P07.07. For details, see the description of P07.07.

In stopped state, there are 15 parameters that can be selected for display, including the set frequency, bus voltage, PID reference value, PID feedback value, input terminal status, output terminal status, torque setting, PLC and the present step of multi-step speed, AI1 value, AI2 value, AI3 value, high-speed pulse HDI frequency, pulse counting value, length value, and upper limit frequency (Hz on). You can press 》/SHIFT to shift selected parameters from left to right or press QUICK/JOG (P07.02=2) to shift selected parameters from right to left.

5.3.2 Displaying running-state parameters

After receiving a valid running command, the VFD enters the running state, and the keypad displays running-state parameters, with the RUN/TUNE indicator on. The on/off state of the FWD/REV indicator is determined by the actual running direction. See Figure 5-4.

In running state, there are 25 parameters that can be selected for display, including the running frequency, set frequency, bus voltage, output voltage, output current, running speed, output power, output torque, PID reference value, PID feedback value, input terminal status, output terminal status, torque setting, length value, PLC and the current step of multi-step speed, AI1, AI2, AI3, high-speed pulse HDI frequency, motor overload percentage, VFD overload percentage, ramp reference value, linear speed, AC input current, and upper limit frequency (Hz on). You can determine which parameters are displayed in stopped state by setting function codes P07.05 and P07.06. You can press ⟫ /SHIFT to shift selected parameters from left to right or press QUICK/JOG to shift selected parameters from right to left.

5.3.3 Displaying fault alarms

After detecting a fault signal, the VFD enters the fault alarm state immediately, the fault code blinks on the keypad, and the TRIP indicator is on. You can perform fault reset by using the STOP/RST key, control terminals, or communication commands.

If the fault persists, the fault code is continuously displayed.

5.3.4 Editing function codes

You can press the PRG/ESC key to enter the editing mode in stopped, running, or fault alarm state (if a user password is used, see the description of P07.00). The editing mode contains two levels of menus in the following sequence: Function code group or function code number → Function code setting. You can press the DATA/ENT key to enter the function parameter display interface. In the function parameter display interface, you can press the DATA/ENT key to save parameter settings or press the PRG/ESC key to exit the parameter display interface.

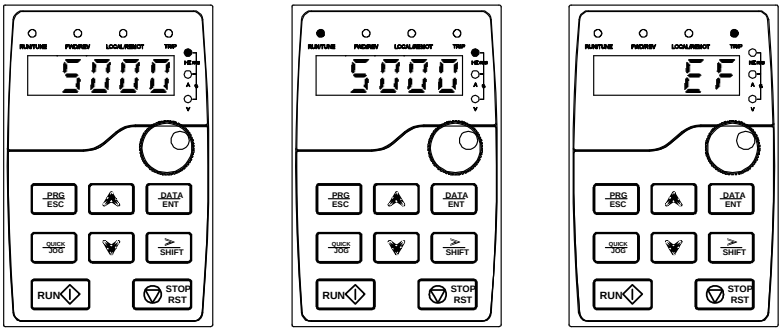

Parameter display in stopped state | Parameter display in running state | Fault display

Figure 5-4 Status display

5.3.5 Modifying function codes

The VFD provides three levels of menus, including:

- Function code group number (level-1 menu)
- Function code number (level-2 menu)
- Function code setting (level-3 menu)

Note: When performing operations on the level-3 menu, you can press the PRG/ESC or DATA/ENT key to return to the level-2 menu. If you press the DATA/ENT key, the set value of the parameter is saved to the control board first, and then the level-2 menu is returned, displaying the next function code. If you press the PRG/ESC key, the level-2 menu is returned directly, without saving the set value of the parameter, and the current function code is displayed.

If you enter the level-3 menu but the parameter does not have a digit blinking, the parameter cannot be modified due to either of the following reasons:

- It is read only. Read-only parameters include actual detection parameters and running record parameters.
- It cannot be modified in running state and can be modified only in stopped state.

Example: Change the value of P00.01 from 0 to 1.

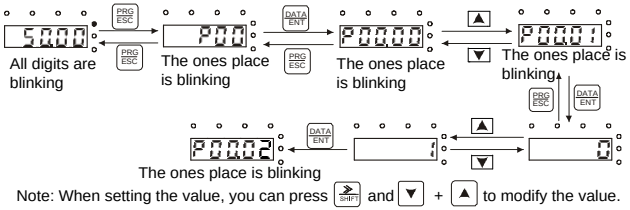

Figure 5-5 Modifying a parameter

5.3.6 Setting a password for the VFD

The VFD provides the user password protection function. When you set P07.00 to a non-zero value, the value is the user password. If password protection is enabled, "0.0.0.0.0" is displayed when you press the PRG/ESC key again to enter the function code editing interface. You need to enter the correct user password to enter the interface.

To disable the password protection function, you need only to set P07.00 to 0.

After you exit the function code editing interface, the password protection function is enabled within 1 minute. If password protection is enabled, "0.0.0.0.0" is displayed when you press the PRG/ESC key again to enter the function code editing interface. You need to enter the correct user password to enter the interface.

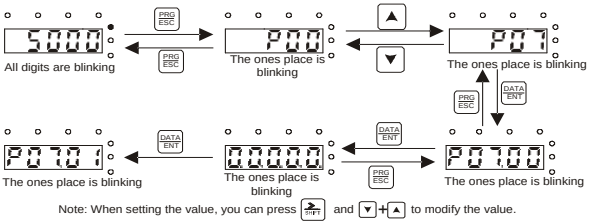

Figure 5-6 Setting a password

5.3.7 Viewing VFD status

The VFD provides group P17 for status viewing. You can enter group P17 for viewing.

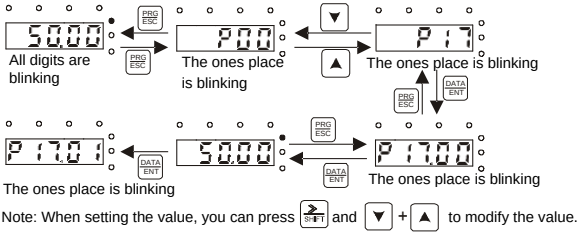

Figure 5-7 Viewing a parameter

5.4 LCD keypad (SOP-270) display and operation

Table 5-2 LCD keypad (SOP-270) component description

Item	Instruction		
State indicator	(1)	RUN	Running indicator; LED off – the VFD is stopped. LED blinking – the VFD is in parameter autotune. LED on – the VFD is running.
	(2)	TRIP	Fault indicator; LED off – in normal state. LED blinking – in pre-alarm state. LED on – in fault state.
	(3)	QUICK/JOG	Short-cut key indicator, which displays different state under different functions, see definition of QUICK/JOG key for details.

Item	Instruction			
Key area	(4)		Function key	The function of function key varies with the menu. The function of function key is displayed in the footer.
	(5)			
	(6)			
	(7)		Short-cut key	Re-definable. It is defined as JOG function by default, namely jogging. The function of short-cut key can be set by the ones of P07.02, as shown below. 0: No function 1: Jogging (linkage indicator (3); logic : NO). 2: Reserved. 3: FWD/REV switchover (linkage indicator (3); logic: NC). 4: Clear UP/DOWN setting (linkage indicator (3) logic: NC). 5: Coast to stop (linkage indicator (3); logic: NC). 6: Switching running command reference mode in order (linkage indicator (3); logic: NC) 7: Reserved **Note:** After restoring to the default value, the default function of short-cut key (7) is 1.
	(8)		Confirmation key	The function of confirmation key varies with menus, such as confirming parameter setup, confirming parameter selection, and entering the next menu.
	(9)		Running key	Under keypad operation mode, the running key is used for running operation or autotuning operation.
	(10)		Stop/ Reset key	During running state, press the Stop/Reset key can stop running or autotuning; this key is limited by P07.04. During fault alarm state, all the control modes can be reset by this key.
	(11)		Direction key UP: 	UP: The function of UP key varies with interfaces, such as shifting up the displayed item, shifting up the selected item, and changing digits;

Item	Instruction			
			DOWN: LEFT: RIGHT:	DOWN: The function of DOWN key varies with interfaces, such as shifting down the displayed item, shifting down the selected item, changing digits; LEFT: The function of LEFT key varies with interfaces, such as switch over the monitoring interface, such as shifting the cursor leftward, exiting current menu and returning to previous menu; RIGHT: The function of RIGHT key varies with interfaces, such as switch over the monitoring interface, shifting the cursor rightward, and entering the next menu.
Display area	(12)	LCD	Display screen	240×160 dot-matrix LCD; display three monitoring parameters or six sub-menu items simultaneously
Others	(13)	RJ45 interface	RJ45 interface	RJ45 interface is used to connect to the VFD.
	(14)	Battery cover	Clock battery cover	Remove this cover when replacing or installing clock battery, and close the cover after battery is installed
	(15)	USB terminal	Mini USB terminal	Mini USB terminal is used to connect to the USB flash drive through an adapter.

The LCD has different display areas, which displays different contents under different interfaces. The figure below is the main interface of stop state.

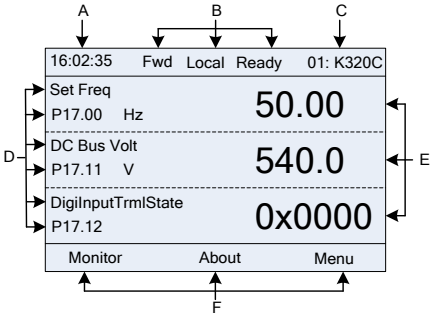

Figure 5-8 Main interface of LCD

Area	Name	Used to
Header A	Real-time display area	Display the real-time; clock battery is not included; the time needs to be reset when powering on the VFD.
Header B	VFD running state display area	Display the running state of the VFD: 1. Display motor rotating direction: "Fwd" – Run forward

Area	Name	Used to
		during operation; Rev – Run reversely during operation; "Disrev" – Reverse running is forbidden. 2. Display VFD running command channel: "Local" – Keypad; "Trml" – Terminal; "Remote" - Communication 3. Display current running state of the VFD : "Ready" – The VFD is in stop state (no fault); "Run" – The VFD is in running state; "Jog" – The VFD is in jogging state; "Pre-alarm" – the VFD is under pre-alarm state during running; "Fault" – VFD fault occurred.
Header C	VFD model display area	VFD model display: "K320C" – current VFD is K320C series VFD.
Display D	Parameter names and function codes on the VFD homepage	Display a maximum of three parameter names and function codes on the homepage. The parameters displayed on the homepage can be managed.
Display E	Values of parameters on the VFD homepage	Display the values of parameters on the VFD homepage, which are updated in real time.
Footer F	Corresponding menus of function keys (4), (5) and (6)	Indicate the menus corresponding to function keys (4), (5) and (6). The corresponding menus of function keys (4), (5) and (6) vary with interfaces, and the content displayed in this area varies also.

The VFD keypad can display the stopped-state parameters, running-state parameters, function parameter editing status, and fault alarm status.

5.4.1 Displaying stopped-state parameters

When the VFD is in stopped state, the keypad displays stopped-state parameters, and this interface is the main interface during power-up by default. In stopped state, parameters in various states can be displayed. Press ▲ or ▼ to shift the displayed parameter up or down.

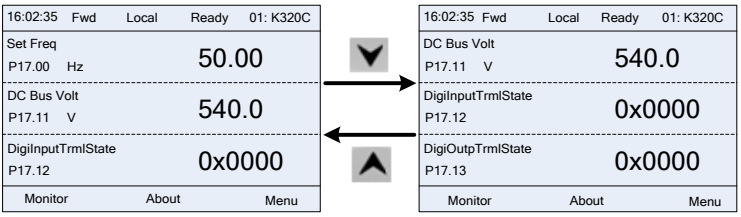

Figure 5-9 Stopped-state parameter display 1

Press ◀ or ▶ to switch between different display styles, including list display style and progress bar display style.

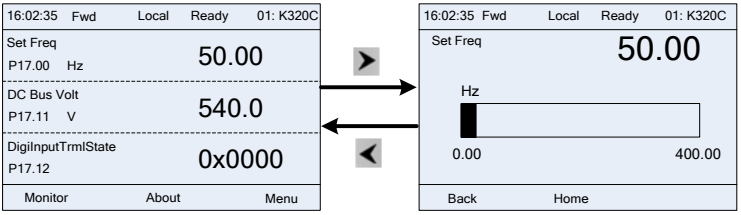

Figure 5-10 Stopped-state parameter display 2

The stopped-state parameter display list is user defined, and each state variable function code can be added to the stopped-state parameter display list as needed. A function code which has been added to the stopped-state parameter display list can also be deleted or shifted.

5.4.2 Displaying running-state parameters

After receiving a valid running command, the VFD will enter running state, and the keypad displays running state parameter with RUN indicator on the keypad turning on. In running state, multiple kinds of state parameters can be displayed. Press ▲ or ▼ to shift up or down.

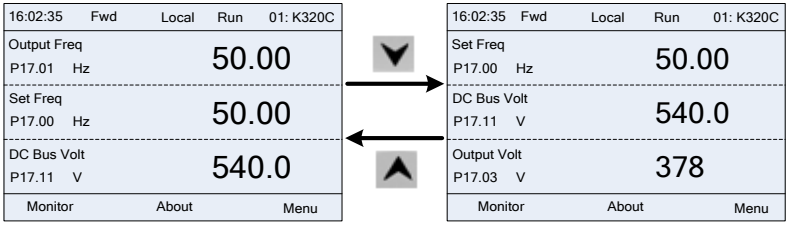

Figure 5-11 Running parameter display state 1

Press ◄ or ► to switch between different display styles, including list display style and progress bar display style.

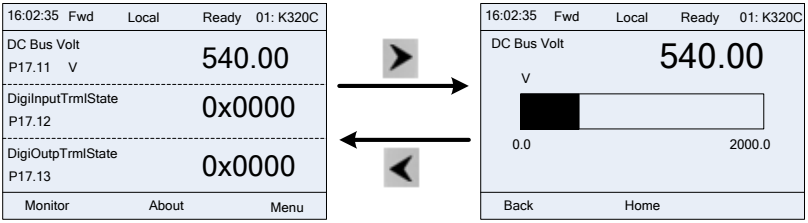

Figure 5-12 Running parameter display state 2

In running state, multiple kinds of state parameters can be displayed. The running display parameter list is user defined, and each state variable function code can be added to the running display parameter list as needed. A function code which has been added to the running display parameter list can also be deleted or shifted.

5.4.3 Displaying fault information

The VFD enters fault alarm display state once fault signal is detected, and the keypad displays fault code and fault information with TRIP indicator on the keypad turning on. Fault reset operation can be carried out via STOP/RST key, control terminal or communication command.

The fault code will be kept displaying until fault is removed.

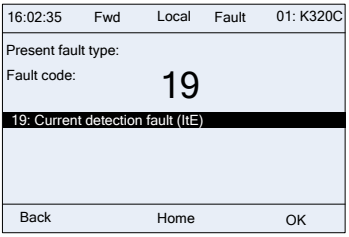

Figure 5-13 Fault alarm display state

You can perform various operations on the VFD by using the keypad, including entering/exiting menu, parameter selection, list modification and parameter addition.

5.4.4 Entering/exiting menus

The keypad displays three main menus at the home interface by default: **Parameter**, **About**, and **Menu**. The following figure shows how to enter the **Parameter** main menu and how to operate under this main menu.

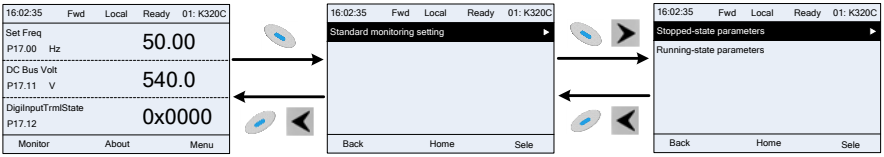

Figure 5-14 Enter/exit menu 1

The following figure shows how to enter the **Menu** main menu and operate under this main menu.

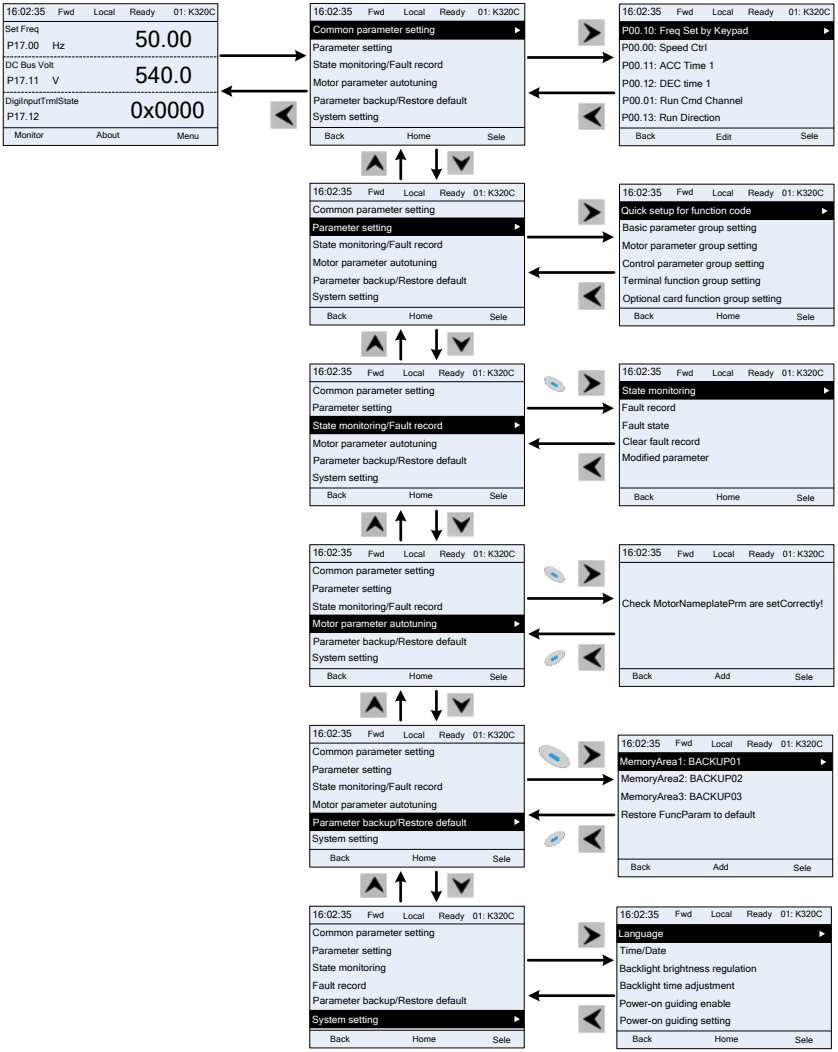

Figure 5-15 Enter/exit menu 2

The keypad menu setup is shown as follows.

Level 1	Level 2	Level 3	Level 4
Common parameter setting	/	/	P00.10: Frequency set through keypad
			P00.00: Speed control mode
			Pxx.xx: Common parameter setting xx
Parameter setting	Quick setup for function code	/	Pxx.xx
	Basic parameter group setting	P00: Basic functions	P00.xx
		P07: HMI	P07.xx
		P08: Enhanced functions	P08.xx
		P11: Protection parameters	P11.xx
		P14: Serial communication functions	P14.xx
		P99: Reserved	P99.xx
	Motor parameter group setting	P02: Motor 1 parameters	P02.xx
		P12: Motor 2 parameters	P12.xx
		P20: Reserved	P20.xx
		P24: Reserved	P24.xx
	Control parameter group setting	P01: Start/stop control	P01.xx
		P03: Motor1 vector control	P03.xx
		P04: V/F control	P04.xx
		P09: PID control	P09.xx
		P10: Simple PLC and multi-step speed control	P10.xx
		P13: SM control parameters	P13.xx
		P21: Reserved	P21.xx
		P22: Reserved	P22.xx
		P23: Motor 2 vector control	P23.xx
	Terminal function group setting	P05: Input terminals	P05.xx
		P06: Output terminals	P06.xx
		P98: Reserved	P98.xx
	Optional card function group setting	P15: Functions of communication expansion card 1	P15.xx
		P16: Functions of communication expansion card 2	P16.xx
		P25: Input functions of expansion I/O card	P25.xx
		P26: Output functions of expansion I/O card	P26.xx
		P27: Reserved	P27.xx
		P28: Master/slave control	P28.xx
	Factory-defined control function	P90: PID1 control	P90.xx
		P91: PID2 control	P91.xx

Level 1	Level 2	Level 3	Level 4
	group setting	P92: Real-time clock and timer (available at use of LCD keypad)	P92.xx
		P93: Fire control	P93.xx
State monitoring/fault record	State monitoring	P07: HMI	P07.xx
		P17: Status viewing	P17.xx
		P18: Reserved	P18.xx
		P19: Expansion card status viewing	P19.xx
	Fault record	/	P07.27: Present fault type
			P07.28: Last fault type
			P07.29: 2nd-last fault type
			P07.30: 3rd -last fault type
			P07.31: 4th -last fault type
			P07.32: 5th-last fault type
	Fault state	/	P07.33: Running frequency at present fault
			P07.34: Ramp reference frequency at present fault
			P07.xx: xx state of the last but xx fault
	Clear fault record	/	Sure to clear fault records?
	Modified parameter	/	Pxx.xx has modified parameter 1
			Pxx.xx has modified parameter 2
			Pxx.xx has modified parameter xx
Motor parameter autotuning	/	/	Complete parameter rotary autotuning
			Complete parameter static autotuning
			Partial parameter static autotuning
Parameter backup/Restore default	/	Operate the storage area 1: BACKUP01	Upload local function parameters to keypad
			Download complete function parameters of keypad

Level 1	Level 2	Level 3	Level 4
			Download non-motor group function parameters of keypad
			Download motor group function parameters of keypad
		Operate the storage area 2: BACKUP02	
		Operate the storage area 3: BACKUP03	
		Restore function parameters to default values	Sure to restore function parameters to default?
System setting	/	/	Language
			Time/date
			Backlight brightness regulation
			Backlight time adjustment
			Power-on guiding enable
			Power-on guiding setting
			Keypad burning
			Fault time enable
			Control board buring

5.4.5 Editing a parameter list

The parameters in the parameter list in stopped state can be added as needed (through the menu of user defined home parameters), and the list can also be edited such as "Move up", "Move down", "Delete from the list", and "Restore default". The edit function is shown in the following.

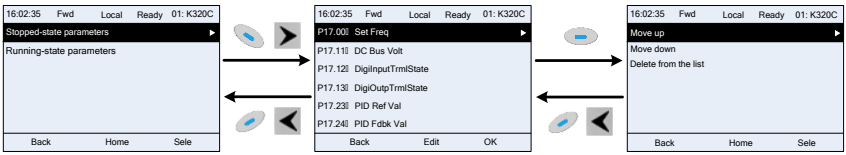

Figure 5-16 List edit 1

Press key to enter edit interface, select the operation needed, and press the key, key or Enter key to confirm the edit operation and return to the previous menu (parameter list), the returned list is the list edited. If the key or key is pressed in edit interface without selectingan edit operation, it will return to the previous menu (parameter list remain unchanged).

Note: For the parameter objects in the list header, move-up operation will be invalid, and the same principle can be applied to the parameter objects in the list footer; after deleting a certain parameter, the parameter objects under it will be moved up automatically.

The items in the parameter list in running state can be added as needed (through the menu of user defined home parameters), and the list can also be edited such as "Place top", "Move up", "Move down", "Delete from the list", and "Restore default parameters". The edit function is shown in the interface below.

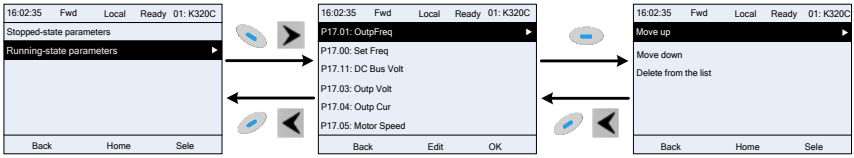

Figure 5-17 List edit 2

The parameters of user defined parameter setting can be added, deleted or adjusted as needed, such as "Place top", "Move up", "Move down", "Delete from the list", and "Restore default parameters"; the adding function can be set in a certain function code in a function group. The edit function is shown in the figure below.

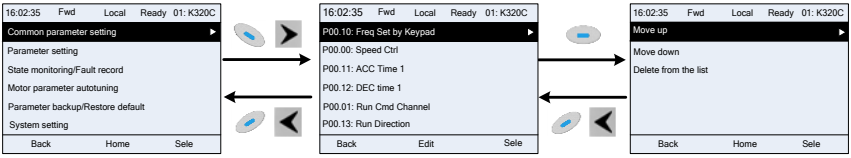

Figure 5-18 List edit 3

5.4.6 Adding parameters to the parameter list displayed in stopped/running state

You can choose **Menu** > **State monitoring**, choose a submenu, and enter a specific function group and then a specific function code to add the parameter to the list of parameters displayed in stopped state or parameters displayed in running state.

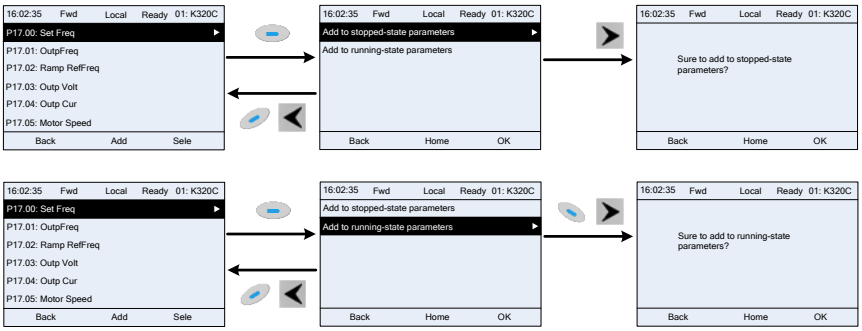

Figure 5-19 Adding parameter 1

After selecting a specific function code, press key to enter parameter addition interface, and press key, key or key to confirm the addition operation. If this parameter is not included in the list of parameters displayed in stopped state or list of parameters displayed in running state, the parameter added will be at the end of the list; if the parameter is already in the list of parameters displayed in stopped state or list of parameters displayed in running state, the addition operation will be invalid. If key or key is pressed without selecting addition operation in "Addition" interface, it will return to monitoring parameter list menu.

Part of the monitoring parameters in P07 HMI group can be added to the "parameter displayed in stop state" list or "parameter displayed in running state" list; all the parameters in P17, P18 and P19 group can be added to the "parameter displayed in stop state" list or "parameter displayed in running state" list.

Up to 16 monitoring parameters can be added to the list of parameters displayed in stopped state; and up to 32 monitoring parameters can be added to the list of parameters displayed in running state.

5.4.7 Adding parameters to the user defined parameter list

You can choose **Menu** > **Parameter groups**, choose a submenu, and enter a specific function group and then a specific function code to add the parameter to the user defined parameter list.

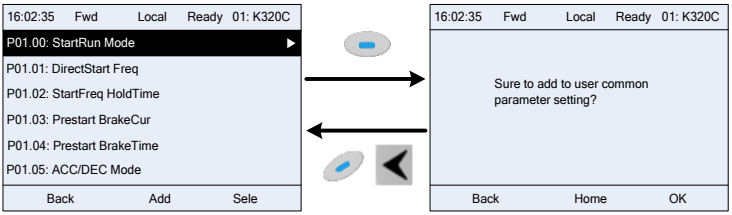

Figure 5-20 Add parameter 2

Press key to enter addition interface, and press key, key or key to confirm the addition operation. If this parameter is not included in the original user defined parameter list, the newly-added parameter will be at the end of the list; if this parameter is already in the user defined parameter list, the addition operation will be invalid. If key or key is pressed without selecting addition operation, it will return to parameter setup list menu.

All the function code groups under the submenu can be added to user defined parameter list. Up to 64 function codes can be added to the user defined parameter list.

5.4.8 Editing user defined parameters

After accessing a specific function code under the **User defined parameters** menu, you can press the key, key or key to enter the parameter edit interface. After entering the edit interface, the present value is highlighted. Press the key and key to edit the parameter value, and the corresponding parameter item of current value will be highlighted automatically. After the edit operation is completed, press or key to save the selected parameter and return to the previous menu; or press key to maintain the value and return to the previous menu.

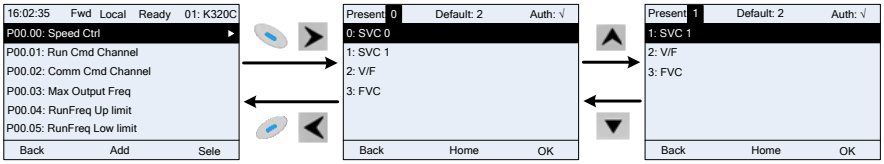

Figure 5-21 Editing user defined parameters

In parameter selection edit interface, the "Auth" field on the top right indicates whether this parameter is editable or not.

"√" indicates the set value of this parameter can be modified under the present state.

"×" indicates the set value of this parameter cannot be modified under the present state.

"Present" indicates the present value.

"Default" indicates the default value of this parameter.

5.4.9 Editing parameters in parameter groups

You can choose **Menu** > **Parameter groups**, enter a specific function group and then a specific function code, and then press key, key or key to edit the parameter setting interface. After entering edit interface, set the parameter from low bit to high bit, and the bit under setting will be highlighted. Press key or key to increase or decrease the parameter value (this operation is valid until the parameter value exceeds the max. value or min. value); press or to shift the editing bit. After parameters are set, press or key to save the set parameters and return to the previous menu; press to maintain the original parameter value and return to the previous menu.

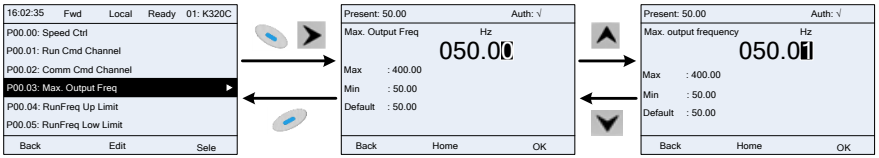

Figure 5-22 Editing parameters in parameter groups

In the parameter edit interface, the "Auth" field on the top right indicates whether this parameter can be modified or not.

"√" indicates the set value of this parameter can be modified under the present state.

"×" indicates the set value of this parameter cannot be modified under the present state.

"Present" indicates the present value.

"Default" indicates the default value of this parameter.

5.4.10 Monitoring states

You can choose **Menu** > **State monitoring** > **State monitoring parameter**, enter a specific function group and then a specific function code, and press key, key or key to enter the state monitoring interface. After entering the state monitoring interface, the actual parameter value will be displayed in real time, this value is the actually detected value which cannot be modified.

In the state monitoring interface, you can press key or key to return to the previous menu.

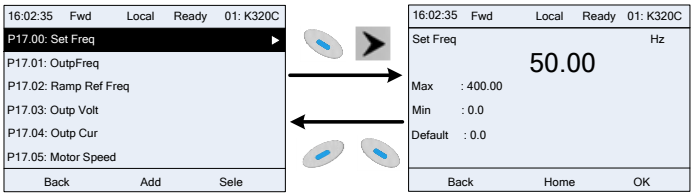

Figure 5-23 State monitoring interface

5.4.11 Autotuning motor parameters

You can choose **Menu** > **Motor parameter autotune** and press key, key or key to enter motor parameter autotuning interface. However, before entering the motor parameter autotuning interface, you must set the motor nameplate parameters correctly. After entering the interface, select a motor autotuning type to carry out motor parameter autotuning. In motor parameter autotuning interface, you can press key or key to return to the previous menu.

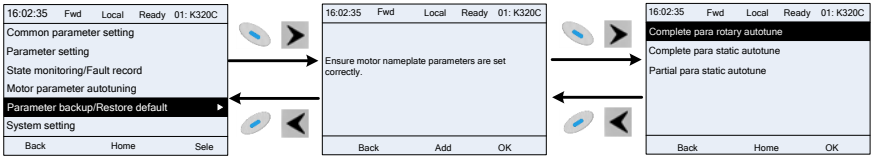

Figure 5-24 Selecting a parameter autotuning type

After selecting a motor autotuning type, enter motor parameter autotuning interface, and press RUN key to start motor parameter autotuning. After autotuning is done, a message will pop up indicating autotuning is succeeded, and then it will return to the main interface of stop. During autotuning, you can press STOP/RST key to terminate autotuning; if any fault occur during autotuning, the keypad will display a fault interface.

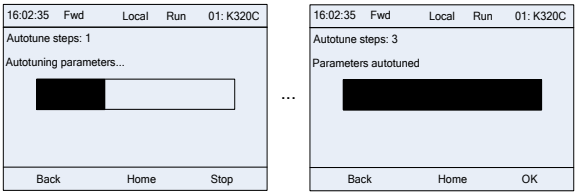

Figure 5-25 Parameter autotuning

5.4.12 Backing up parameters

You can choose **Menu** > **Copy parameter/Restore default**, and press key, key or key to enter the function parameter backup interface and function parameter restoration interface to upload/download VFD parameters, or restore VFD parameters to default values. The keypad has three different storage areas for parameter backup, and each storage area can save the parameters of one VFD, which means the keypad can save parameters of three VFDs in total.

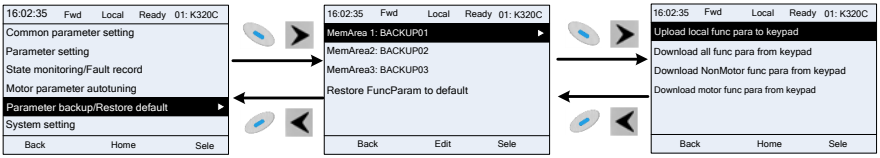

Figure 5-26 Parameter backup

5.4.13 System settings

You can choose **Menu** > **System settings**, and press key, key or key to enter system setting interface to set the keypad language, time/date, backlight brightness, backlight time and restore parameters.

Note: Clock battery is not included, and the keypad time/date needs to be reset after power off. If time-keeping after power off is needed, you should purchase the clock batteries separately.

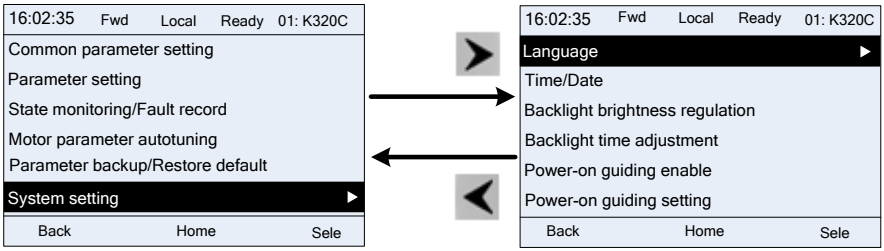

Figure 5-27 System setting

5.4.14 Power-on setup wizard

The keypad supports the power-on setup wizard function, mainly for the first power-on situation, instructing you to enter the setting menu, and gradually implementing basic functions such as basic parameter setting, direction judgment, mode setting and autotuning.

For first power-on, the keypad automatically enters the setup wizard interface. See the following.

Level 1		Level 2		Level 3		Level 4	
Language	0: Simplified Chinese	Power guiding enable	0: Each time	Whether to enter the power-on guiding setting?	0: Yes	Whether to test the the rotating direction of the motor?	Yes
	1: English		1: Just once		1: No		No
				P00.06 Setting channel of A frequency command	0: Keypad	Press JOG first, it is currently forward running, is it as expected?	Yes
					1: AI1		No
					2: AI2	P02.00 Type of motor 1	0: AM
					3: AI3		1: SM
					4: High-speed pulse HDIA	P02.01 Rated power of AM 1	
					5: Simple PLC program	P02.02 Rated frequency of AM 1	
					6: Multi-step speed running	P02.03 Rated speed of AM 1	
					7: PID control	P02.04 Rated voltage of AM 1	
					8: Modbus communication	P02.05 Rated current of AM 1	
					9: PROFIBUS/CANopen communication	P02.15 Rated power of SM 1	
					10: Ethernet	P02.16 Rated	

Level 1		Level 2		Level 3		Level 4	
					communication	frequency of SM 1	
					11: Reserved	P02.17 Number of pole pairs of SM 1	
					12: Reserved	P02.18 Rated voltage of SM 1	
					13: PROFINET communication	P02.19 Rated current of SM 1	
					14–17: Reserved	Whether to perform the autotuning?	Yes
					18: Keypad (for small power models)		No
				P00.01 Channel of running commands	0: Keypad	Motor parameter autotuning interface	
					1: Terminal		
					2: Communication		
				P00.02 Communication mode of running commands	0: Modbus		
					1: PROFIBUS/CANopen		
					2: Ethernet		
					3: PROFINET		
					4: Reserved		
					5: Wireless communication card		
				P08.37 Reserved			
				P00.00 Speed control mode	0: SVC 0		
					1: SVC 1		
					2: Space voltage vector control mode		
				P01.08 Stop mode	0: Decelerate to stop		
					1: Coast to stop		
				P00.11 ACC time 1			
				P00.12 DEC time 1			

5.5 Basic operation description

5.5.1 What this section describes

This section introduces the function modules inside the VFD.

⚠	• Ensure that all terminals have been securely connected. • Ensure that the motor power matches the VFD power.

5.5.2 Common commissioning procedure

The common commissioning procedure is as follows (taking motor 1 as an example).

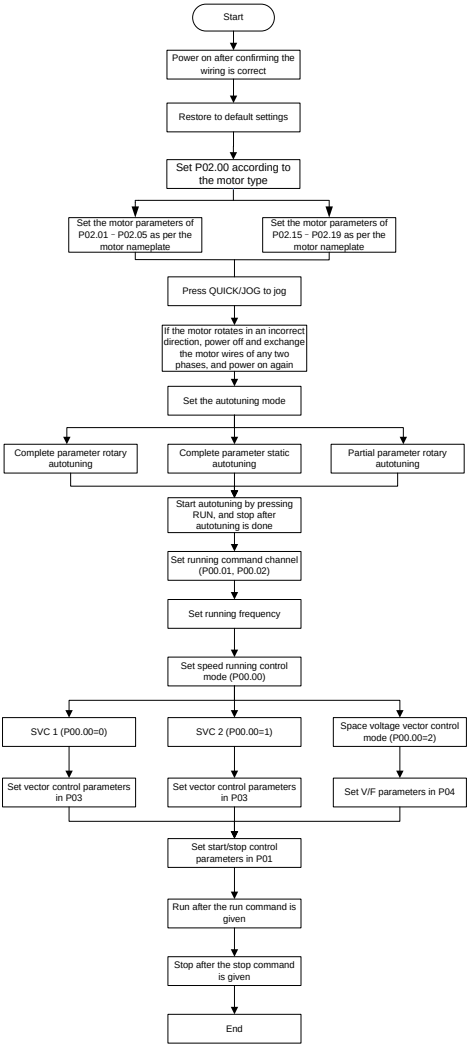

Note: If a fault occurred, find out the fault cause according to "Troubleshooting".

The running command channel can be set by terminal commands besides P00.01 and P00.02.

Channel of running commands P00.01	Multifunction terminal function 36 Switch the running command channel to keypad	Multifunction terminal function37 Switch the running command channel to terminal	Multifunction terminal function 38 Switch the running command channel to communication
Keypad	/	Terminal	Communication
Terminal	Keypad	/	Communication
Communication	Keypad	Terminal	/

Note: "/" indicates this multifunction terminal is invalid under present reference channel.

Related parameter list:

Function code	Name	Description	Default
P00.00	Speed control mode	0: Sensorless vector control (SVC) mode 0 1: Sensorless vector control (SVC) mode 1 2: Space voltage vector control mode **Note:** Before using a vector control mode (0 or 1), enable the VFD to perform motor parameter autotuning first.	2
P00.01	Channel of running commands	0: Keypad 1: Terminal 2: Communication	0
P00.02	Communication mode of running commands	0: Modbus 1: PROFIBUS/CANopen 2: Ethernet 3: PROFINET 4: Reserved 5: Wireless communication card	0
P00.15	Motor parameter autotuning	0: No operation 1: Dynamic autotuning 1; comprehensive motor parameter autotuning. It is recommended to use rotating autotuning when high control accuracy is required. 2: Complete parameter static autotuning; complete parameter static autotuning is used in cases where the motor cannot be disconnected from load. 3: Partial parameter static autotuning; when the present motor is motor 1, only P02.06, P02.07, and P02.08 are autotuned; when the present motor is motor 2, only P12.06, P12.07, and P12.08 are autotuned.	0

Function code	Name	Description	Default
		4: Dynamic autotuning 2, which is similar to rotary autotuning 1 but only valid for AMs 5: Partial parameter static autotuning 2, which is valid only for AMs.	
P00.18	Function parameter restore	0: No operation 1: Restore default values 2: Clear fault records 3: Lock keypad parameters 4–6: Reserved **Note:** After the selected operation is performed, the function code is automatically restored to 0. Restoring the default values may delete the user password. Exercise caution when using this function.	0
P02.00	Type of motor 1	0: Asynchronous motor (AM) 1: Synchronous motor (SM)	0
P02.01	Rated power of AM 1	0.1–3000.0kW	Depends on model
P02.02	Rated frequency of AM 1	0.01Hz–P00.03(Max. output frequency)	50.00Hz
P02.03	Rated speed of AM 1	1–60000rpm	Depends on model
P02.04	Rated voltage of AM 1	0–1200V	Depends on model
P02.05	Rated current of AM 1	0.8–6000.0A	Depends on model
P02.15	Rated power of SM 1	0.1–3000.0kW	Depends on model
P02.16	Rated frequency of SM 1	0.01Hz–P00.03(Max. output frequency)	50.00Hz
P02.17	Number of pole pairs of SM 1	1–50	2
P02.18	Rated voltage of SM 1	0–1200V	Depends on model
P02.19	Rated current of SM 1	0.8–6000.0A	Depends on model
P05.01–P05.06	Function selection of multifunction digital input terminals (S1–S4, and HDIA)	36: Switch the running command channel to keypad 37: Switch the running command channel to terminal 38: Switch the running command channel to communication	
P07.01	Parameter copy	Used to set the parameter copy mode. 0: No operation	0

Function code	Name	Description	Default
		1: Upload parameters to the keypad 2: Download all parameters (including motor parameters) 3: Download non-motor group parameters 4: Download motor group parameters **Note:** After any operation among 1–4 is completed, the parameter restores to 0. The upload and download functions are not applicable to group P29.	
P07.02	Function of QUICK/JOG	Range: 0x00–0x27 Ones place: Function of QUICK/JOG 0: No function 1: Jog 2: Reserved 3: Switch between forward and reverse rotating 4: Clear the UP/DOWN setting 5: Coast to stop 6: Switch command channels in sequence 7: Reserved Tens place: Reserved	0x01

5.5.3 Vector control

AMs feature high order, nonlinearity, strong coupling and multi-variables, which increase difficulty to control AMs during actual application. The vector control technology solves this situation as follows: measures and controls the stator current vector of the AM, and then decomposes the stator current vector into exciting current (current component that generates internal magnet field) and torque current (current component that generates torque) based on field orientation principle, and therefore controls the amplitude values and phase positions of the two components (namely, controls the stator current vector of the AM) to realize decoupled control on exciting current and torque current, thus achieving high-performance speed regulation of the AM.

Integrated with the sensor-less vector control algorithm, the VFD can drive both AMs and permanent-magnet SMs. As the core algorithm of vector control is based on accurate motor parameter models, the accuracy of motor parameters affects vector control performance. It is recommended to enter accurate motor parameters and autotune motor parameters before executing vector control.

As the vector control algorithm is complicated, exercise caution before modifying vector control function parameters.

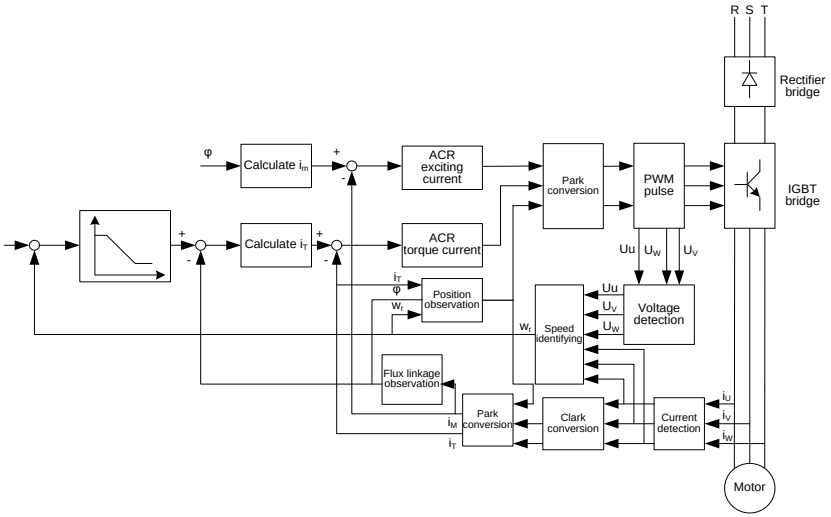

Function code	Name	Description	Default
P00.00	Speed control mode	0: Sensorless vector control (SVC) mode 0 1: Sensorless vector control (SVC) mode 1 2: Space voltage vector control mode **Note:** If a vector control mode (0 or 1) is used, enable the VFD to perform motor parameter autotuning first.	2
P00.15	Motor parameter autotuning	0: No operation 1: Dynamic autotuning 1; comprehensive motor parameter autotuning. It is recommended to use rotating autotuning when high control accuracy is required. 2: Complete parameter static autotuning; complete parameter static autotuning is used in cases where the motor cannot be disconnected from load. 3: Partial parameter static autotuning; when the present motor is motor 1, only P02.06, P02.07, and P02.08 are autotuned; when the present motor is motor 2, only P12.06, P12.07, and P12.08 are autotuned. 4: Dynamic autotuning 2, which is similar to rotary autotuning 1 but only valid for AMs 5: Partial parameter static autotuning 2, which is valid only for AMs.	0

Function code	Name	Description	Default
P02.00	Type of motor 1	0: Asynchronous motor (AM) 1: Synchronous motor (SM)	0
P03.00	Speed-loop proportional gain 1	0–200.0	20.0
P03.01	Speed-loop integral time 1	0.000–10.000s	0.200s
P03.02	Low-point frequency for switching	0.00Hz – P03.05	5.00Hz
P03.03	Speed-loop proportional gain 2	0–200.0	20.0
P03.04	Speed-loop integral time 2	0.000–10.000s	0.200s
P03.05	High-point frequency for switching	P03.02–P00.03 (Max. output frequency)	10.00Hz
P03.06	Speed-loop output filter	0–8 (0–2^8/10ms)	0
P03.07	Electromotive slip compensation coefficient of vector control	50%–200.0%	100%
P03.08	Braking slip compensation coefficient of vector control	50%–200.0%	100%
P03.09	Current-loop proportional coefficient P	0–65535	1000
P03.10	Current-loop integral coefficient I	0–65535	1000
P03.11	Torque setting method	1: Keypad (P03.12) 2: AI1 (100% corresponding to triple the motor rated current) 3: AI2 4: AI3 (same as the above) 5: Pulse frequency HDIA 6: Multi-step torque 7: Modbus communication 8: PROFIBUS/CANopen communication 9: Ethernet communication 10: Reserved	1

Function code	Name	Description	Default
		11: PROFINET communication 12–17: Reserved 18: Keypad (for small power models) **Note:** For setting sources 2–6, 100% corresponds to triple the motor rated current.	
P03.12	Torque set through keypad	-300.0%–300.0% (of the motor rated current)	50.0%
P03.13	Torque reference filter time	0.000–10.000s	0.010s
P03.14	Setting source of forward rotation upper-limit frequency in torque control	0: Keypad (P03.16) 1: AI1 (100% corresponding to the max. frequency) 2: AI2 (same as the above) 3: AI3 (same as the above) 4: Pulse frequency HDIA (same as the above) 5: Multi-step setting (same as the above) 6: Modbus communication (same as the above) 7: PROFIBUS/CANopen communication (same as the above) 8: Ethernet communication (same as the above) 9: Reserved 10: PROFINET communication **Note:** For setting sources 1–10, 100% corresponds to the max. frequency.	0
P03.15	Setting source of reverse rotation upper-limit frequency in torque control	0: Keypad (P03.17) 1–11: Same as those for P03.14	0
P03.16	Forward rotation upper-limit frequency set through keypad in torque control	Setting range: 0.00 Hz–P00.03 (Max. output frequency)	50.00Hz
P03.17	Reverse rotation upper-limit frequency set through keypad in torque control		50.00Hz

Function code	Name	Description	Default
P03.18	Setting source of electromotive torque upper limit	0: Keypad (P03.20) 1: AI1 (100% corresponding to triple the motor rated current) 2: AI2 (same as the above) 3: AI3 (same as the above) 4: Pulse frequency HDIA 5: Modbus communication 6: PROFIBUS/CANopen communication 7: Ethernet communication 8: Reserved 9: PROFINET communication 10–17: Reserved 18: Keypad (for small power models) **Note:** For setting sources 1–4, 100% corresponds to triple the motor rated current.	0
P03.19	Setting source of braking torque upper limit	0: Keypad (P03.21) 1–18: Same as those for P03.18	0
P03.20	Electromotive torque upper limit set through keypad	0.0–300.0% (of the motor rated current)	180.0%
P03.21	Braking torque upper limit set through keypad		180.0%
P03.22	Weakening coefficient in constant power zone	0.1–2.0	0.3
P03.23	Lowest weakening point in constant power zone	10%–100.0%	20%
P03.24	Max. voltage limit	0.0–120.0%	100.0%
P03.25	Pre-exciting time	0.000–10.000s	0.300s
P03.32	Enabling torque control	0: Disable 1: Enable	0
P03.33	Flux-weakening integral	0–8000	1200

Function code	Name	Description	Default
	gain		
P03.35	Control optimization setting	Range: 0x0000–0x1111 Ones place: Torque command selection 0: Torque reference 1: Torque current reference Tens place: Reserved 0: Reserved 1: Reserved Hundreds place: indicates whether to enable speed-loop integral separation 0: Disable 1: Enable Thousands place: Reserved 0: Reserved 1: Reserved	0x0000
P03.36	Speed-loop differential gain	0.00–10.00s	0.00s
P03.37	High-frequency current-loop proportional coefficient	In the vector control mode (P00.00=3), when the frequency is lower than the current-loop high-frequency switching threshold (P03.39), the current-loop PI parameters are P03.09 and P03.10; and when the frequency is higher than the current-loop high-frequency switching threshold, the current-loop PI parameters are P03.37 and P03.38. P03.37 setting range: 0–65535 P03.38 setting range: 0–65535 P03.39 setting range: 0.0–100.0% (of the max. frequency)	1000
P03.38	High-frequency current-loop integral coefficient		1000
P03.39	Current-loop high-frequency switching threshold		100.0%
P17.32	Flux linkage	0.0–200.0%	0.0%

5.5.4 Space voltage vector control mode

The VFD also carries built-in space voltage vector control function. The space voltage vector control mode can be used in cases where mediocre control precision is enough. In cases where a VFD needs to drive multiple motors, it is also recommended to adopt space voltage vector control mode.

The VFD provides multiple kinds of V/F curve modes to meet different field needs. You can select corresponding V/F curve or set the V/F curve as needed.

Suggestions:

- For the load featuring constant moment, such as conveyor belt which runs in straight line, as the whole running process requires constant moment, it is recommended to adopt the straight line V/F curve.
- For the load featuring decreasing moment, such as fan and water pumps, as there is a power (square or cube) relation between its actual torque and speed, it is recommended to

adopt the V/F curve corresponding to the power of 1.3, 1.7 or 2.0.

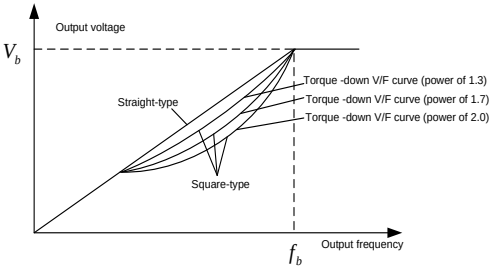

The VFD also provides multi-point V/F curves. You can change the V/F curves output by the VFD by setting the voltage and frequency of the three points in the middle. A whole curve consists of five points starting from (0Hz, 0V) and ending at (motor fundamental frequency, motor rated voltage). During setting, follow the rule: 0 ≤ f1 ≤ f2 ≤ f3 ≤ Motor fundamental frequency, and, 0 ≤ V1 ≤ V2 ≤ V3 ≤ Motor rated voltage

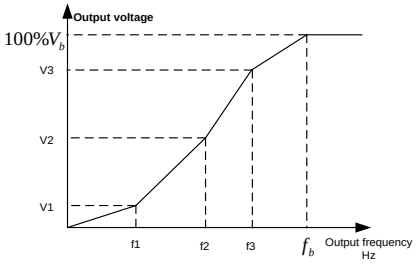

The VFD provides dedicated function codes for the space voltage control mode. You can improve the space voltage control performance by means of setting.

1. Torque boost

The torque boost function can effectively compensate for the low-speed torque performance in space voltage control. Automatic torque boost has been set by default, which enables the VFD to adjust the torque boost value based on actual load conditions.

Note:

- Torque boost takes effect only at the torque boost cut-off frequency.
- If torque boost is too large, the motor may encounter low-frequency vibration or overcurrent. If such a situation occurs, reduce the torque boost value.

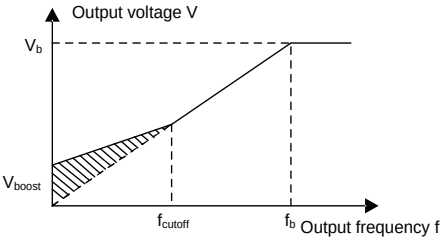

2. V/F slip compensation gain

Space voltage vector control belongs to an open-loop mode. Sudden motor load changes cause motor speed fluctuation. In cases where strict speed requirements must be met, you can set the slip compensation gain to compensate for the speed change caused by load fluctuation through VFD internal output adjustment.

The setting range of slip compensation gain is 0–200%, in which 100% corresponds to the rated slip frequency.

Note: Rated slip frequency = (Rated synchronous rotation speed of motor – Rated rotation speed of motor) x (Number of motor pole pairs)/60

3. Oscillation control

Motor oscillation often occurs in space voltage vector control in large-power driving applications. To solve this problem, the VFD provides two oscillation factor function codes. You can set the function codes based on the oscillation occurrence frequency.

Note: A greater value indicates better control effect. However, if the value is too large, the VFD output current may be too large.

4. AM IF control

Generally, the IF control mode is valid for AMs. It can be used for SMs only when the frequency is extremely low. Therefore, the IF control mode described in this manual is only involved with AMs. IF control is implemented by performing closed-loop control on the total output current of the VFD. The output voltage adapts to the current reference, and open-loop control is separately performed over the frequency of the voltage and current.

Customized V/F curve (V/F separation) function:

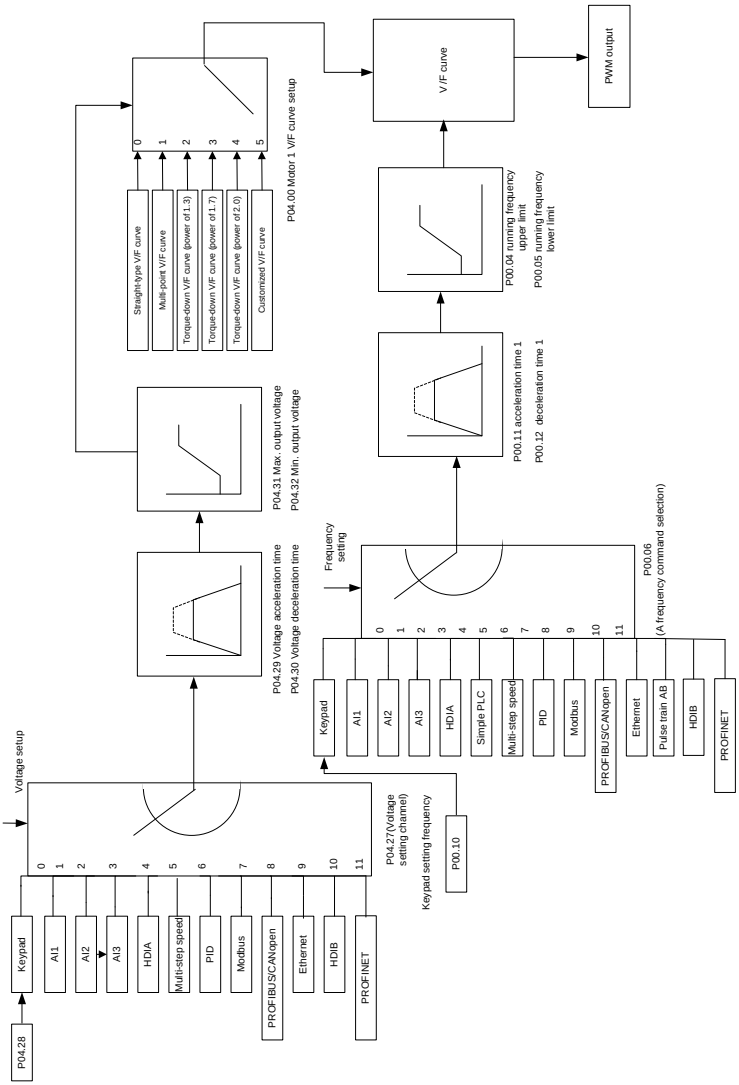

When selecting the customized V/F curve function, you can specify the setting channels and acceleration/deceleration time of voltage and frequency respectively, which form a real-time V/F curve in combination manner.

Note: This type of V/F curve separation can be applied in various variable-frequency power sources. However, exercise caution when setting parameters as improper settings may cause equipment damage.

Function code	Name	Description	Default
P00.00	Speed control mode	0: Sensorless vector control (SVC) mode 0 1: Sensorless vector control (SVC) mode 1 2: Space voltage vector control mode **Note:** Before using a vector control mode (0 or 1), enable the VFD to perform motor parameter autotuning first.	2
P00.03	Max. output frequency	P00.04–400.00Hz	50.00Hz
P00.04	Upper limit of running frequency	P00.05–P00.03	50.00Hz
P00.05	Lower limit of running frequency	0.00Hz – P00.04	0.00Hz
P00.11	ACC time 1	0.0–3600.0s	Depends on model
P00.12	DEC time 1	0.0–3600.0s	Depends on model
P02.00	Type of motor 1	0: Asynchronous motor (AM) 1: Synchronous motor (SM)	0
P02.02	Rated frequency of AM 1	0.01Hz–P00.03(Max. output frequency)	50.00Hz
P02.04	Rated voltage of AM 1	0–1200V	Depends on model
P04.00	V/F curve setting of motor 1	0: Straight-line V/F curve 1: Multi-point V/F curve 2: Torque-down V/F curve (power of 1.3) 3: Torque-down V/F curve (power of 1.7) 4: Torque-down V/F curve (power of 2.0) 5: Customized V/F curve (V/F separation)	0
P04.01	Torque boost of motor 1	0.0%: (automatic) 0.1%–10.0%	0.0%
P04.02	Torque boost cut-off of motor 1	0.0%–50.0% (of the rated frequency of motor 1)	20.0%
P04.03	V/F frequency point 1 of motor 1	0.00Hz – P04.05	0.00Hz
P04.04	V/F voltage point 1 of motor 1	0.0%–110.0%	0.0%
P04.05	V/F frequency point 2 of motor 1	P04.03–P04.07	0.00Hz
P04.06	V/F voltage point 2 of motor 1	0.0%–110.0%	0.0%
P04.07	V/F frequency point 3 of motor 1	P04.05–P02.02 or P04.05–P02.16	0.00Hz

Function code	Name	Description	Default
P04.08	V/F voltage point 3 of motor 1	0.0%–110.0%	0.0%
P04.09	V/F slip compensation gain of motor 1	0.0–200.0%	100.0%
P04.10	Low-frequency oscillation control factor of motor 1	0–100	10
P04.11	High-frequency oscillation control factor of motor 1	0–100	10
P04.12	Oscillation control threshold of motor 1	0.00Hz–P00.03(Max. output frequency)	30.00Hz
P04.13	V/F curve setting of motor 2	0: Straight-line V/F curve 1: Multi-point V/F curve 2: Torque-down V/F curve (power of 1.3) 3: Torque-down V/F curve (power of 1.7) 4: Torque-down V/F curve (power of 2.0) 5: Customized V/F curve (V/F separation)	0
P04.14	Torque boost of motor 2	0.0%: (automatic) 0.1%–10.0%	0.0%
P04.15	Torque boost cut-off of motor 2	0.0%–50.0% (of the rated frequency of motor 1)	20.0%
P04.16	V/F frequency point 1 of motor 2	0.00Hz – P04.18	0.00Hz
P04.17	V/F voltage point 1 of motor 2	0.0%–110.0%	0.0%
P04.18	V/F frequency point 2 of motor 2	P04.16–P04.20	0.00Hz
P04.19	V/F voltage point 2 of motor 2	0.0%–110.0%	0.0%
P04.20	V/F frequency point 3 of motor 2	P04.18–P02.02 or P04.18–P02.16	0.00Hz
P04.21	V/F voltage point 3 of motor 2	0.0%–110.0%	0.0%
P04.22	V/F slip compensation gain of motor 2	0.0–200.0%	100.0%
P04.23	Low-frequency oscillation control factor of motor 2	0–100	10
P04.24	High-frequency oscillation control factor of motor 2	0–100	10
P04.25	Oscillation control	0.00Hz–P00.03(Max. output frequency)	30.00Hz

Function code	Name	Description	Default
	threshold of motor 2		
P04.26	Energy-saving run	0: Disable 1: Automatic energy-saving run	0
P04.27	Voltage setting channel	0: Keypad; Output voltage is determined by P04.28. 1: AI1 2: AI2 3: AI3 4: HDIA 5: Multi-step running 6: PID 7: Modbus communication 8: PROFIBUS/CANopen communication 9: Ethernet communication 10: Reserved 11: PROFINET communication 12–17: Reserved 18: Keypad (for small power models)	0
P04.28	Voltage set through keypad	0.0%–100.0% (of the motor rated voltage)	100.0%
P04.29	Voltage increase time	0.0–3600.0s	5.0s
P04.30	Voltage decrease time	0.0–3600.0s	5.0s
P04.31	Max. output voltage	P04.32 –100.0% (of the motor rated voltage)	100.0%
P04.32	Min. output voltage	0.0%–P04.31 (motor rated voltage)	0.0%
P04.33	Weakening coefficient in constant power zone	1.00–1.30	1.00
P04.34	Pull-in current 1 in SM V/F control	When the SM VF control mode is enabled, the function code is used to set the reactive current of the motor when the output frequency is lower than the frequency specified by P04.36. Setting range: -100.0%–+100.0% (of the motor rated current)	20.0%
P04.35	Pull-in current 2 in SM V/F control	When the SM VF control mode is enabled, the function code is used to set the reactive current of the motor when the output frequency is higher than the frequency specified by P04.36. Setting range: -100.0%–+100.0% (of the motor rated current)	10.0%

Function code	Name	Description	Default
P04.36	Frequency threshold for pull-in current switching in SM V/F control	When the SM VF control mode is enabled, the function code is used to set the frequency threshold for the switching between pull-in current 1 and pull-in current 2. Setting range: 0.00Hz–P00.03 (Max. output frequency)	50.00Hz
P04.37	Reactive current closed-loop proportional coefficient in SM V/F control	When the SM VF control mode is enabled, the function code is used to set the proportional coefficient of reactive current closed-loop control. Setting range: 0–3000	50
P04.38	Reactive current closed-loop integral time in SM V/F control	When the SM VF control mode is enabled, the function code is used to set the integral coefficient of reactive current closed-loop control. Setting range: 0–3000	30
P04.39	Reactive current closed-loop output limit in SM VF control	When the SM VF control mode is enabled, the function code is used to set the output limit of the reactive current closed-loop control. A greater value indicates a higher reactive closed-loop compensation voltage and higher output power of the motor. In general, you do not need to modify the function code. Setting range: 0–16000	8000
P04.40	Enabling IF mode for AM 1	0: Invalid 1: Enable	0
P04.41	Current setting in IF mode for AM 1	When IF control is adopted for AM 1, the function code is used to set the output current. The value is a percentage in relative to the rated current of the motor. Setting range: 0.0–200.0%	120.0%
P04.42	Proportional coefficient in IF mode for AM 1	When IF control is adopted for AM 1, the function code is used to set the proportional coefficient of the output current closed-loop control. Setting range: 0–5000	350
P04.43	Integral coefficient in IF mode for AM 1	When IF control is adopted for AM 1, the function code is used to set the integral coefficient of the output current closed-loop control. Setting range: 0–5000	150
P04.44	Starting frequency point for switching off IF mode for AM 1	0.00–P04.50	10.00Hz
P04.45	Enabling IF mode	0: Invalid	0

Function code	Name	Description	Default
	for AM 2	1: Enable	
P04.46	Current setting in IF mode for AM 2	When IF control is adopted for AM 2, the function code is used to set the output current. The value is a percentage in relative to the rated current of the motor. Setting range: 0.0–200.0%	120.0%
P04.47	Proportional coefficient in IF mode for AM 2	When IF control is adopted for AM 2, the function code is used to set the proportional coefficient of output current closed-loop control. Setting range: 0–5000	350
P04.48	Integral coefficient in IF mode for AM 2	When IF control is adopted for AM 2, the function code is used to set the integral coefficient of output current closed-loop control. Setting range: 0–5000	150
P04.49	Starting frequency point for switching off IF mode for AM 2	0.00–P04.51	10.00Hz
P04.50	End frequency point for switching off IF mode for AM 1	P04.44– P00.03	25.00Hz
P04.51	End frequency point for switching off IF mode for AM 2	P04.49– P00.03	25.00Hz

5.5.5 Torque control

The VFD supports torque control and speed control. Speed control aims to stabilize the speed to keep the set speed consistent with the actual running speed, meanwhile, the max. load-carrying capacity is restricted by the torque limit. Torque control aims to stabilize the torque to keep the set torque consistent with the actual output torque, meanwhile, the output frequency is restricted by the upper and lower limits.

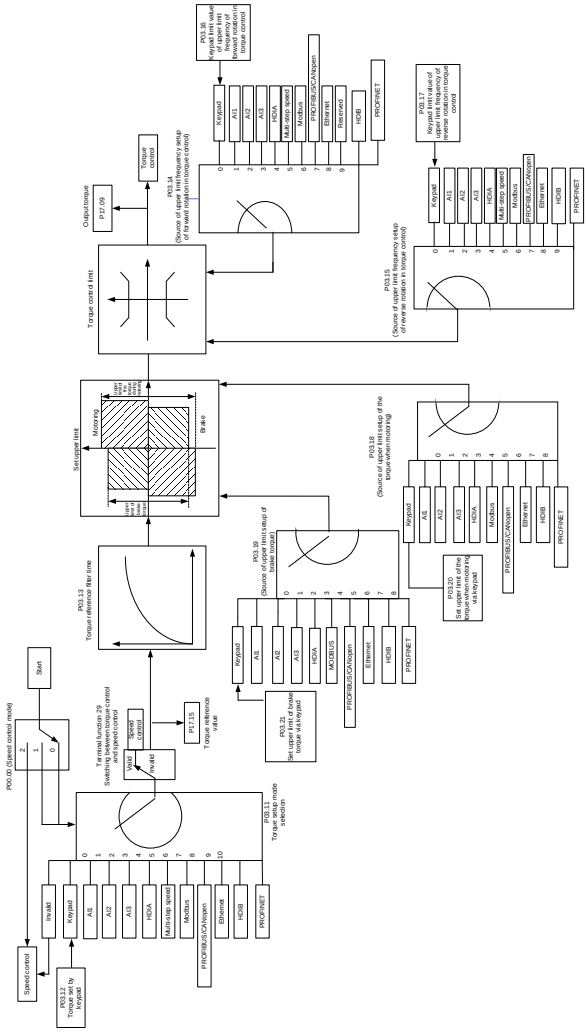

Function code	Name	Description	Default
P00.00	Speed control mode	0: Sensorless vector control (SVC) mode 0 1: Sensorless vector control (SVC) mode 1 2: Space voltage vector control mode **Note:** Before using a vector control mode (0 or 1), enable the VFD to perform motor parameter autotuning first.	2
P03.32	Enabling torque	0: Disable	0

Function code	Name	Description	Default
	control	1: Enable	
P03.11	Torque setting method	0: Keypad (P03.12) 1: Keypad (P03.12) 2: AI1 (100% corresponding to triple the motor rated current) 3: AI2 4: AI3 (same as the above) 5: Pulse frequency HDIA 6: Multi-step torque 7: Modbus communication 8: PROFIBUS/CANopen communication 9: Ethernet communication 10: Reserved 11: PROFINET communication 12–17: Reserved 18: Keypad (for small power models) **Note:** For setting sources 2–6, 100% corresponds to triple the motor rated current.	0
P03.12	Torque set through keypad	-300.0%–300.0% (of the motor rated current)	50.0%
P03.13	Torque reference filter time	0.000–10.000s	0.010s
P03.14	Setting source of forward rotation upper-limit frequency in torque control	0: Keypad (P03.16) 1: AI1 (100% corresponding to the max. frequency) 2: AI2 (same as the above) 3: AI3 (same as the above) 4: Pulse frequency HDIA (same as the above) 5: Multi-step setting (same as the above) 6: Modbus communication (same as the above) 7: PROFIBUS/CANopen communication (same as the above) 8: Ethernet communication (same as the above) 9: Reserved 10: PROFINET communication 11–17: Reserved 18: Keypad (for small power models)	0
P03.15	Setting source of reverse rotation upper-limit frequency in torque control	0: Keypad (P03.17) 1: AI1 (100% corresponding to the max. frequency) 2: AI2 (same as the above) 3: AI3 (same as the above) 4: Pulse frequency HDIA (same as the above) 5: Multi-step setting (same as the above) 6: Modbus communication (same as the above)	0

Function code	Name	Description	Default
		7: PROFIBUS/CANopen communication (same as the above) 8: Ethernet communication (same as the above) 9: Reserved 10: PROFINET communication 11–17: Reserved 18: Keypad (for small power models)	
P03.16	Forward rotation upper-limit frequency set through keypad in torque control	0.00Hz–P00.03(Max. output frequency)	50.00 Hz
P03.17	Reverse rotation upper-limit frequency set through keypad in torque control	0.00Hz–P00.03(Max. output frequency)	50.00 Hz
P03.18	Setting source of electromotive torque upper limit	0: Keypad (P03.20) 1: AI1 (100% corresponding to triple the motor rated current) 2: AI2 (same as the above) 3: AI3 (same as the above) 4: Pulse frequency HDIA 5: Modbus communication 6: PROFIBUS/CANopen communication 7: Ethernet communication 8: Reserved 9: PROFINET communication 10–17: Reserved 18: Keypad (for small power models) **Note:** For setting sources 1–4, 100% corresponds to triple the motor rated current.	0
P03.19	Setting source of braking torque upper limit	0: Keypad (P03.21) 1: AI1 (100% corresponding to triple the motor rated current) 2: AI2 (same as the above) 3: AI3 (same as the above) 4: Pulse frequency HDIA 5: Modbus communication 6: PROFIBUS/CANopen communication 7: Ethernet communication 8: Reserved 9: PROFINET communication 10–17: Reserved 18: Keypad (for small power models)	0

Function code	Name	Description	Default
		Note: For setting sources 1–4, 100% corresponds to triple the motor rated current.	
P03.20	Electromotive torque upper limit set through keypad	0.0–300.0% (of the motor rated current)	180.0%
P03.21	Braking torque upper limit set through keypad	0.0–300.0% (of the motor rated current)	180.0%
P17.09	Motor output torque	-250.0–250.0%	0.0%
P17.15	Torque reference value	-300.0–300.0% (of the motor rated current)	20.0%

5.5.6 Motor parameters

	• Check the safety conditions surrounding the motor and load machineries before autotuning as physical injury may occur due to sudden start of motor during autotuning. • Although the motor does not run during static autotuning, the motor is still supplied with power. Do not touch the motor during autotuning; otherwise, electric shock may occur. Do not touch the motor before autotuning is completed.
	• If the motor has been connected to a load, do not carry out rotary autotuning. Otherwise, the VFD may malfunction or may be damaged. If rotary autotuning is carried out on a motor which has been connected to a load, incorrect motor parameter settings and motor action exceptions may occur. Disconnect from the load to carry out autotuning if necessary.

The VFD can drive both AMs and SMs, and it supports two sets of motor parameters, which can be switched over by multifunction digital input terminals or communication modes.

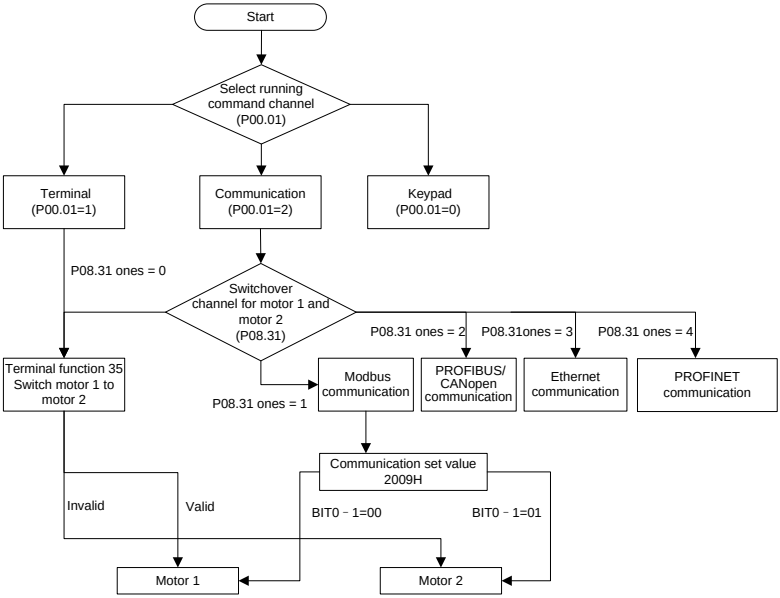

The control performance of the VFD is based on accurate motor models. Therefore, you need to carry out motor parameter autotuning before running a motor for the first time (taking motor 1 as an example).

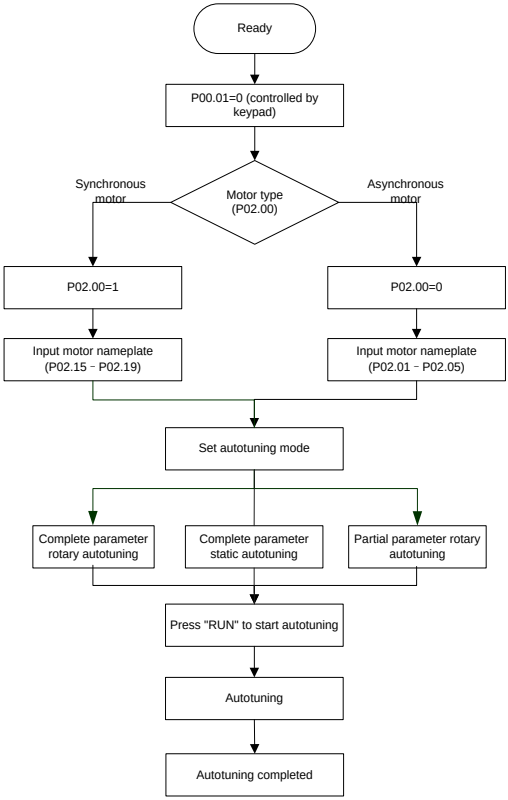

Note:

- Motor parameters must be set correctly according to the motor nameplate.
- If rotary autotuning is selected during motor autotuning, disconnect the motor from the load to put the motor in static and no-load state. Otherwise, the motor parameter autotuning results may be incorrect. In addition, autotune P02.06–P02.10 for AMs and autotune P02.20–P02.23 for SMs.
- If static autotuning is selected for motor autotuning, there is no need to disconnect the motor from the load, but the control performance may be impacted as only a part of the motor parameters have been autotuned. In addition, autotune P02.06–P02.10 for AMs and autotune P02.20–P02.22 for SMs. P02.23 can be obtained through calculation.
- Motor autotuning can be carried out on the present motor only. If you need to perform autotuning on the other motor, switch the motor through selecting the switch-over channel of motor 1 and motor 2 by setting the ones place of P08.31.

Related parameter list:

Function code	Name	Description	Default
P00.01	Channel of running commands	0: Keypad 1: Terminal 2: Communication	0
P00.15	Motor parameter autotuning	0: No operation 1: Dynamic autotuning 1; comprehensive motor parameter autotuning. It is recommended to use rotating autotuning when high control accuracy is required. 2: Complete parameter static autotuning; complete parameter static autotuning is used in cases where the motor cannot be disconnected from load. 3: Partial parameter static autotuning; when the present motor is motor 1, only P02.06, P02.07, and P02.08 are autotuned; when the present motor is motor 2, only P12.06, P12.07, and P12.08 are autotuned. 4: Dynamic autotuning 2, which is similar to rotary autotuning 1 but only valid for AMs 5: Partial parameter static autotuning 2, which is valid only for AMs.	0
P02.00	Type of motor 1	0: Asynchronous motor (AM) 1: Synchronous motor (SM)	0
P02.01	Rated power of AM 1	0.1–3000.0kW	Depends on model
P02.02	Rated frequency of AM 1	0.01Hz–P00.03(Max. output frequency)	50.00Hz
P02.03	Rated speed of AM 1	1–60000rpm	Depends on model
P02.04	Rated voltage of AM 1	0–1200V	Depends on model
P02.05	Rated current of AM 1	0.8–6000.0A	Depends on model
P02.06	Stator resistance of AM 1	0.001–65.535Ω	Depends on model
P02.07	Rotor resistance of AM 1	0.001–65.535Ω	Depends on model
P02.08	Leakage inductance of AM 1	0.1–6553.5mH	Depends on model

Function code	Name	Description	Default
P02.09	Mutual inductance of AM 1	0.1–6553.5mH	Depends on model
P02.10	No-load current of AM 1	0.1–6553.5A	Depends on model
P02.15	Rated power of SM 1	0.1–3000.0kW	Depends on model
P02.16	Rated frequency of SM 1	0.01Hz–P00.03(Max. output frequency)	50.00Hz
P02.17	Number of pole pairs of SM 1	1–50	2
P02.18	Rated voltage of SM 1	0–1200V	Depends on model
P02.19	Rated current of SM 1	0.8–6000.0A	Depends on model
P02.20	Stator resistance of SM 1	0.001–65.535Ω	Depends on model
P02.21	Direct-axis inductance of SM 1	0.01–655.35mH	Depends on model
P02.22	Quadrature-axis inductance of SM 1	0.01–655.35mH	Depends on model
P02.23	Counter-emf constant of SM 1	0–10000	300
P05.01–P05.06	Function selection of multifunction digital input terminals (S1–S4, and HDIA)	35: Switch from motor 1 to motor 2	
P08.31	Switching between motor 1 and motor 2	0x00–0x14 Ones place: Switchover channel 0: Terminal 1: Modbus communication 2: PROFIBUS/CANopen communication 3: Ethernet communication 4: PROFINET communication Tens place: indicates whether to enable switchover during running 0: Disable 1: Enable	00
P12.00	Type of motor 2	0: Asynchronous motor (AM) 1: Synchronous motor (SM)	0
P12.01	Rated power of AM 2	0.1–3000.0kW	Depends on model
P12.02	Rated frequency of AM 2	0.01Hz–P00.03(Max. output frequency)	50.00Hz
P12.03	Rated speed of AM 2	1–60000rpm	Depends on model

Function code	Name	Description	Default
P12.04	Rated voltage of AM 2	0–1200V	Depends on model
P12.05	Rated current of AM 2	0.8–6000.0A	Depends on model
P12.06	Stator resistance of AM 2	0.001–65.535Ω	Depends on model
P12.07	Rotor resistance of AM 2	0.001–65.535Ω	Depends on model
P12.08	Leakage inductance of AM 2	0.1–6553.5mH	Depends on model
P12.09	Mutual inductance of AM 2	0.1–6553.5mH	Depends on model
P12.10	No-load current of AM 2	0.1–6553.5A	Depends on model
P12.15	Rated power of SM 2	0.1–3000.0kW	Depends on model
P12.16	Rated frequency of SM 2	0.01Hz–P00.03(Max. output frequency)	50.00Hz
P12.17	Number of pole pairs of SM 2	1–50	2
P12.18	Rated voltage of SM 2	0–1200V	Depends on model
P12.19	Rated current of SM 2	0.8–6000.0A	Depends on model
P12.20	Stator resistance of SM 2	0.001–65.535Ω	Depends on model
P12.21	Direct-axis inductance of SM 2	0.01–655.35mH	Depends on model
P12.22	Quadrature-axis inductance of SM 2	0.01–655.35mH	Depends on model
P12.23	Counter-emf constant of SM 2	0–10000	300

5.5.7 Start/stop control

The start/stop control of the VFD involves three states: start after a running command is given at power-on; start after power-off restart is effective; start after automatic fault reset. The three start/stop control states are described in the following.

There are three start modes for the VFD, which are start at starting frequency, start after DC braking, and start after speed tracking. You can select the proper start mode based on actual conditions.

For large-inertia load, especially in cases where reversal may occur, you can choose to start after DC braking or start after speed tracking.

Note: It is recommended to drive SMs in direct start mode.

(1) Logic diagram for start after a running command is given at power-on

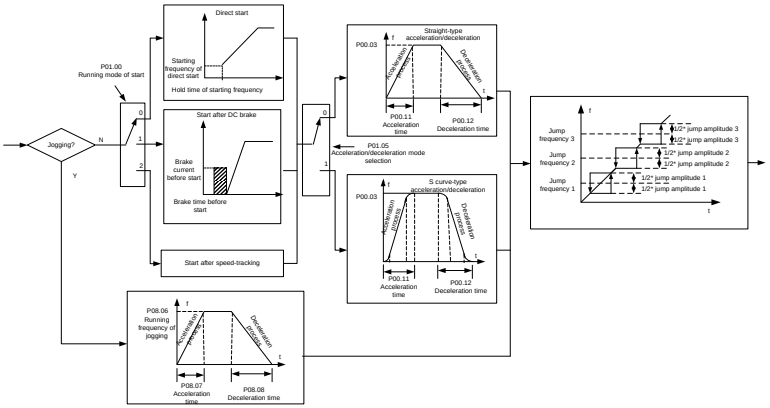

(2) Logic diagram for start after power-off restart is effective

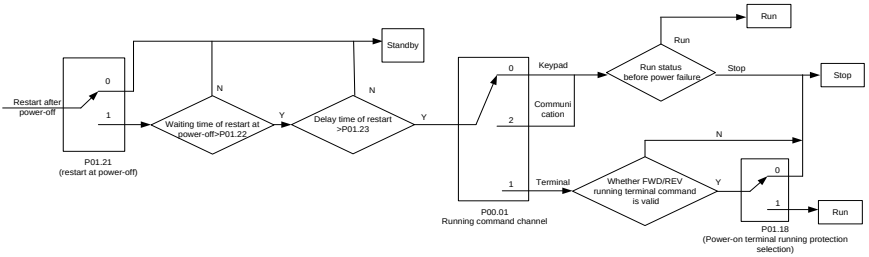

(3) Logic diagram for start after automatic fault reset

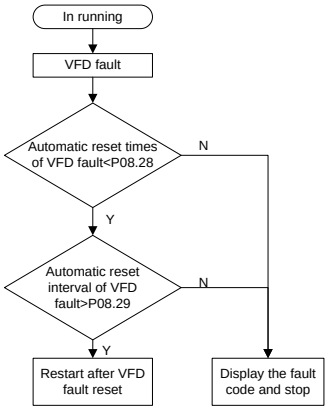

Related parameter list:

Function code	Name	Description	Default
P00.01	Channel of running commands	0: Keypad 1: Terminal 2: Communication	0
P00.11	ACC time 1	0.0–3600.0s	Depends on model
P00.12	DEC time 1	0.0–3600.0s	Depends on model
P01.00	Start mode	0: Direct start 1: Start after DC braking 2: Speed tracking restart **Note:** For AMs, speed tracking is not supported in SVC 0, and software speed tracking is supported in other modes. For details, see parameters P01.35–P01.41. For AMs, you do not need to modify parameters P01.35–P01.41.	0
P01.01	Starting frequency of direct start	0.00–50.00Hz	0.50Hz
P01.02	Starting frequency hold time	0.0–50.0s	0.0s
P01.03	Braking current before start	0.0–100.0%	0.0%
P01.04	DC braking time before start	0.00–50.00s	0.00s
P01.05	ACC/DEC mode	0: Linear 1: S curve	0

Function code	Name	Description	Default
		Note: If mode 1 is selected, set P01.06, P01.07, P01.27 and P01.28.	
P01.08	Stop mode	0: Decelerate to stop 1: Coast to stop	0
P01.09	Starting frequency of DC braking for stop	0.00Hz–P00.03(Max. output frequency)	0.00Hz
P01.10	Wait time before DC braking for stop	0.00–50.00s	0.00s
P01.11	DC braking current for stop	0.0–100.0%	0.0%
P01.12	DC braking time for stop	0.00–50.00s	0.00s
P01.13	FWD/REV running deadzone time	0.0–3600.0s	0.0s
P01.14	FWD/REV running switching mode	0: Switch at zero frequency 1: Switch at the starting frequency 2: Switch after the speed reaches the stop speed with a delay	0
P01.15	Stop speed	0.00–100.00Hz	0.50 Hz
P01.16	Stop speed detection mode	0: Detect by the set speed (unique in space voltage vector control mode) 1: Detect by the feedback speed	1
P01.18	Terminal-based running command protection at power-on	0: The terminal running command is invalid at power-on 1: The terminal running command is valid at power-on	0
P01.19	Action selected when running frequency less than frequency lower limit (valid when frequency lower limit greater than 0)	0: Run at the frequency lower limit 1: Stop 2: Sleep	0
P01.20	Wake-up-from-sleep delay	0.0–3600.0s (valid when P01.19 is 2)	0.0s
P01.21	Power-off restart selection	0: Disable 1: Enable	0
P01.22	Wait time for restart after power-off	0.0–3600.0s (valid when P01.21 is 1)	1.0s
P01.23	Start delay	0.0–60.0s	0.0s
P01.24	Stop speed delay	0.0–100.0s	0.0s
P01.25	Open-loop 0Hz output selection	0: Output without voltage 1: Output with voltage 2: Output with the DC braking current for stop	0
P01.26	DEC time for emergency stop	0.0–60.0s	2.0s
P01.27	Time of starting segment of DEC S curve	0.0–50.0s	0.1s
P01.28	Time of ending segment of	0.0–50.0s	0.1s

Function code	Name	Description	Default
	DEC S curve		
P01.29	Short-circuit braking current	0.0–150.0% (of the VFD rated current)	0.0%
P01.30	Hold time of short-circuit braking for start	0.00–50.00s	0.00s
P01.31	Hold time of short-circuit braking for stop	0.00–50.00s	0.00s
P01.32	Pre-exciting time for jogging	0–10.000s	0.300s
P01.33	Starting frequency of braking for stop in jogging	0.00–P00.03	0.00Hz
P01.34	Sleep delay	0–3600.0s	0.0s
P05.01–P05.06	Digital input function selection	1: Run forward 2: Run reversely 4: Jog forward 5: Jog reversely 6: Coast to stop 7: Reset faults 8: Pause running 21: ACC/DEC time selection 1 22: ACC/DEC time selection 2 30: Disable ACC/DEC	
P08.00	ACC time 2	0.0–3600.0s	Depends on model
P08.01	DEC time 2	0.0–3600.0s	Depends on model
P08.02	ACC time 3	0.0–3600.0s	Depends on model
P08.03	DEC time 3	0.0–3600.0s	Depends on model
P08.04	ACC time 4	0.0–3600.0s	Depends on model
P08.05	DEC time 4	0.0–3600.0s	Depends on model
P08.06	Running frequency of jog	0.00Hz–P00.03(Max. output frequency)	5.00Hz
P08.07	ACC time for jogging	0.0–3600.0s	Depends on model
P08.08	DEC time for jogging	0.0–3600.0s	Depends on model
P08.19	Switching frequency of ACC/DEC time	0.00–P00.03(Max. frequency) 0.00Hz: No switchover If the running frequency is greater than P08.19, switch to ACC/DEC time 2.	0
P08.21	Reference frequency of	0: Max. output frequency	0

Function code	Name	Description	Default
	ACC/DEC time	1: Set frequency 2: 100Hz **Note:** Valid only for straight-line ACC/DEC	
P08.28	Auto fault reset count	0–10	0
P08.29	Auto fault reset interval	0.1–3600.0s	1.0s

5.5.8 Frequency setting

The VFD supports multiple kinds of frequency reference modes, which can be categorized into two types: main reference channel and auxiliary reference channel.

There are two main reference channels, namely frequency reference channel A and frequency reference channel B. These two channels support simple arithmetical operation between each other, and they can be switched dynamically by setting multifunction terminals.

There is one input mode for auxiliary reference channel, namely terminal UP/DOWN switch input. By setting function codes, you can enable the corresponding reference mode and the impact made on the VFD frequency reference by this reference mode.

The VFD actual reference is comprised of the main reference channel and auxiliary reference channel.

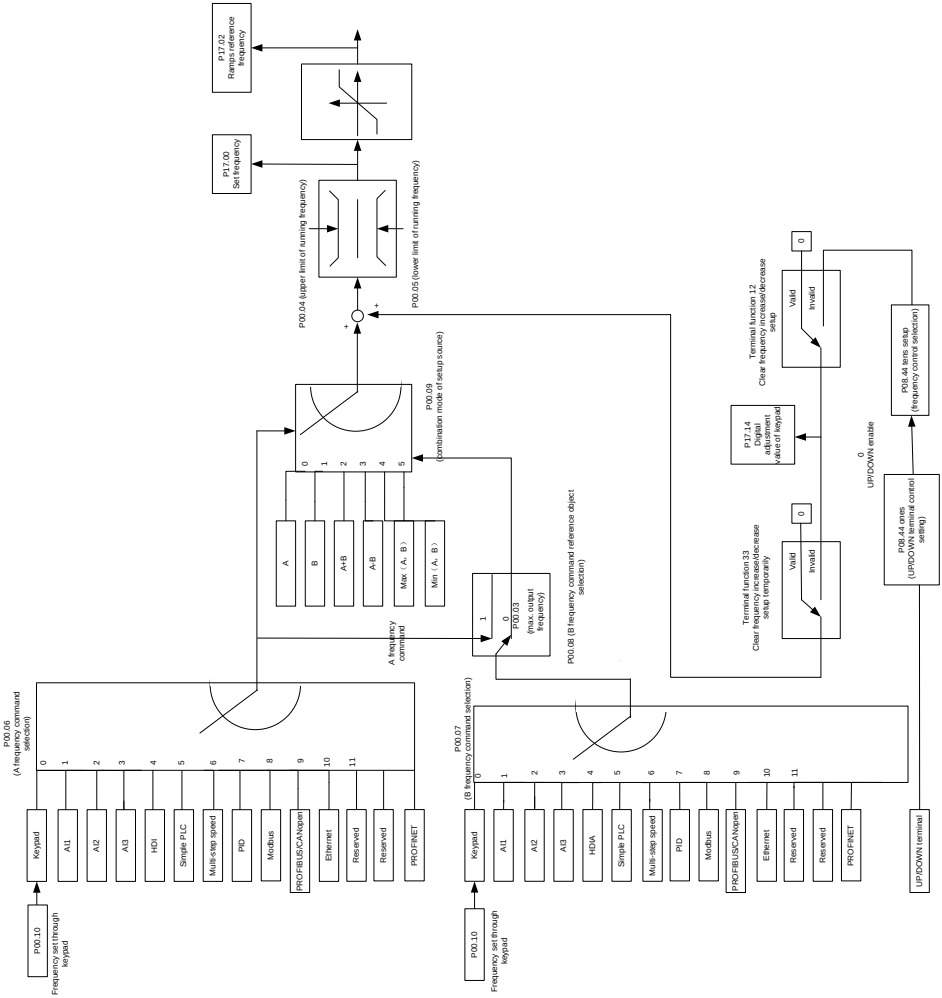

The VFD supports switchover between different reference channels, and the rules for channel switchover are shown as follows.

Present reference channel P00.09	Multifunction terminal function 13 (Switch from channel A to channel B)	Multifunction terminal function 14 (Switch from combined setting to channel A)	Multifunction terminal function 15 (Switch from combined setting to channel B)
A	B	/	/
B	A	/	/
A+B	/	A	B
A-B	/	A	B
Max(A, B)	/	A	B
Min(A, B)	/	A	B

Note: "/" indicates this multifunction terminal is invalid under present reference channel.

When setting the auxiliary frequency inside the VFD via multi-function terminal UP (10) and DOWN (11), you can increase/decrease the frequency quickly by setting P08.45 (UP terminal frequency incremental change rate) and P08.46 (DOWN terminal frequency decremental change rate).

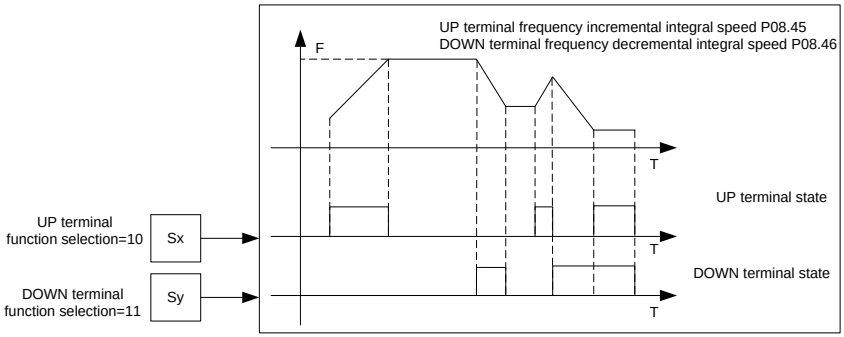

Related parameter list:

Function code	Name	Description	Default
P00.03	Max. output frequency	P00.04–400.00Hz	50.00Hz
P00.04	Upper limit of running frequency	P00.05–P00.03	50.00Hz
P00.05	Lower limit of running frequency	0.00Hz – P00.04	0.00Hz
P00.06	Setting channel of A frequency command	0: Keypad 1: AI1 2: AI2 3: AI3 4: High-speed pulse HDIA 5: Simple PLC program 6: Multi-step speed running	0
P00.07	Setting channel of B frequency command		15

Function code	Name	Description	Default
		7: PID control 8: Modbus communication 9: PROFIBUS/CANopen communication 10: Ethernet communication 11: Reserved 12: Reserved 13: PROFINET communication 14–17: Reserved 18: Keypad (for 1.5–22kW models)	
P00.08	Reference object of B frequency command	0: Max. output frequency 1: A frequency command	0
P00.09	Combination mode of setting source	0: A 1: B 2: (A+B) 3: (A-B) 4: Max(A, B) 5: Min(A, B)	0
P05.01–P05.06	Function selection of multifunction digital input terminals (S1–S4, and HDIA)	10: Increase frequency setting (UP) 11: Decrease frequency setting (DOWN) 12: Clear the frequency increase/decrease setting 13: Switch between A setting and B setting 14: Switch between combination setting and A setting 15: Switch between combination setting and B setting	
P08.42	Keypad digital control setting	0x0000–0x1223 LED ones place: 0: Both the∧/∨ key and digital potentiometer can be used for the control. 1: Only the ∧/∨ key can be used for the control. 2: Only the digital potentiometer can be used for the control. 3: Neither the ∧/∨ key nor the digital potentiometer can be used for the control. Tens place: Frequency control selection 0: Valid only when P00.06=0 or P00.07=0 1: Valid for all frequency setting methods	0x0000

Function code	Name	Description	Default
		2: Invalid for multi-step speed running when multi-step speed running has the priority LED hundreds place: Action selection for stop 0: Setting is valid. 1: Valid during running, cleared after stop 2: Valid during running, cleared after a stop command is received LED thousands place: Indicates whether to enable the integral function through the ∧/∨ key and digital potentiometer. 0: Disable the integral function 1: Enable the integral function	
P08.43	Keypad digital potentiometer integral rate	0.01–10.00s	0.10s
P08.44	UP/DOWN terminal control setting	0x000–0x221 Ones place: Frequency setting selection 0: The setting made through UP/DOWN is valid. 1: The setting made through UP/DOWN is invalid. Tens place: Frequency control selection 0: Valid only when P00.06=0 or P00.07=0 1: Valid for all frequency setting methods 2: Invalid for multi-step speed running when multi-step speed running has the priority Hundreds place: Action selection for stop 0: Setting is valid. 1: Valid during running, cleared after stop 2: Valid during running, cleared after a stop command is received	0x000
P08.45	Frequency increment change rate of the UP terminal	0.01–50.00Hz/s	0.50 Hz/s

Function code	Name	Description	Default
P08.46	Frequency reduce rate of the DOWN terminal	0.01–50.00Hz/s	0.50 Hz/s
P17.00	Set frequency	0.00Hz–P00.03(Max. output frequency)	0.00Hz
P17.02	Ramp reference frequency	0.00Hz–P00.03(Max. output frequency)	0.00Hz
P17.14	Digital adjustment value	0.00Hz – P00.03	0.00Hz

5.5.9 Analog input

The VFD carries two analog input terminals AI1 and AI2, in which AI1 supports the range of 0(2)–10V/0(4)–20mA (whether AI1 uses voltage input or current input can be set by P05.50; when AI1 uses current input, the AI-I short cap on the control board needs to be shorted) and AI2 supports the range of -10–10V), and one high-speed pulse input terminal. Each input can be filtered separately, and the corresponding reference curve can be set by adjusting the reference corresponds to the max. value and min. value.

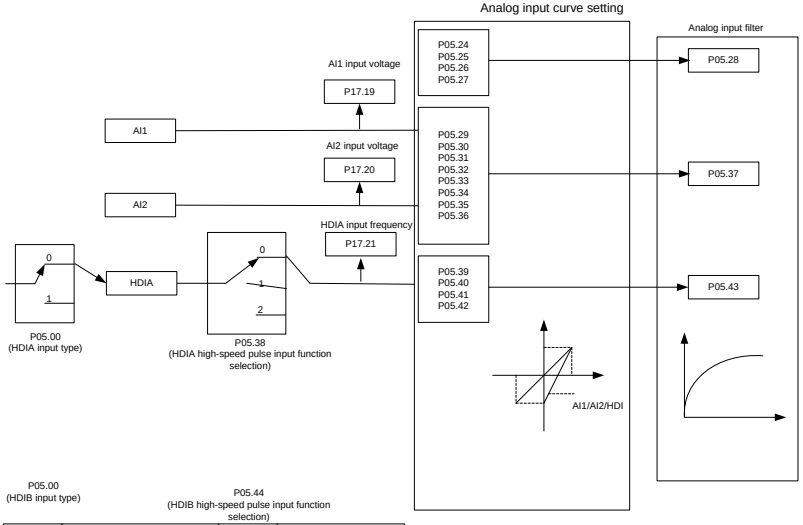

P05.00 (HDIB input type)

P05.44 (HDIB high-speed pulse input function selection)

P05.00	Ones: 0: HDIA is high-speed pulse input 1: HDIA is digital input	P05.38	0: Frequency setting 1: Reserved 2: Input via encoder
P05.00	Tens: 0: Reserved 1: Reserved	P05.44	0: Reserved 1: Reserved 2: Reserved

Related parameter list:

Function code	Name	Description	Default
P05.00	HDI input type	0x00–0x11 Ones place: HDIA input type	0x00

Function code	Name	Description	Default
		0: HDIA is high-speed pulse input 1: HDIA is digital input Tens place: Reserved	
P05.24	AI1 lower limit	0.00V–P05.26	0.00V
P05.25	Corresponding setting of AI1 lower limit	-300.0%–300.0%	0.0%
P05.26	AI1 upper limit	P05.24–10.00V	10.00V
P05.27	Corresponding setting of AI1 upper limit	-300.0%–300.0%	100.0%
P05.28	AI1 input filter time	0.000s–10.000s	0.100s
P05.29	AI2 lower limit	-10.00V–P05.31	-10.00V
P05.30	Corresponding setting of AI2 lower limit	-300.0%–300.0%	-100.0%
P05.31	AI2 middle value 1	P05.29–P05.33	0.00V
P05.32	Corresponding setting of AI2 middle value 1	-300.0%–300.0%	0.0%
P05.33	AI2 middle value 2	P05.31–P05.35	0.00V
P05.34	Corresponding setting of AI2 middle value 2	-300.0%–300.0%	0.0%
P05.35	AI2 upper limit	P05.33–10.00V	10.00V
P05.36	Corresponding setting of AI2 upper limit	-300.0%–300.0%	100.0%
P05.37	AI2 input filter time	0.000s–10.000s	0.100s
P05.38	HDIA high-speed pulse input function selection	0: Frequency setting 1: Reserved 2: Reserved	0
P05.39	HDIA lower limit frequency	0.000kHz – P05.41	0.000kHz
P05.40	Corresponding setting of HDIA lower limit frequency	-300.0%–300.0%	0.0%
P05.41	HDIA upper limit frequency	P05.39–50.000kHz	50.000kHz
P05.42	Corresponding setting of HDIA upper limit frequency	-300.0%–300.0%	100.0%
P05.43	HDIA frequency input filter time	0.000s–10.000s	0.030s
P05.50	AI1 input signal type	0–1 0: Voltage 1: Current **Note:** When you set AI1 to use current input by setting this parameter, you also need to change the AI1 jumper cap at the right corner of the control board from V to I.	0

5.5.10 Analog output

The VFD carries two analog output terminals (0–10V/0–20mA) and one high-speed pulse output terminal. Analog output signals can be filtered separately, and the proportional relation can be adjusted by setting the max. value, min. value, and the percentage of their corresponding output. Analog output signal can output motor speed, output frequency, output current, motor torque and motor power at a certain proportion.

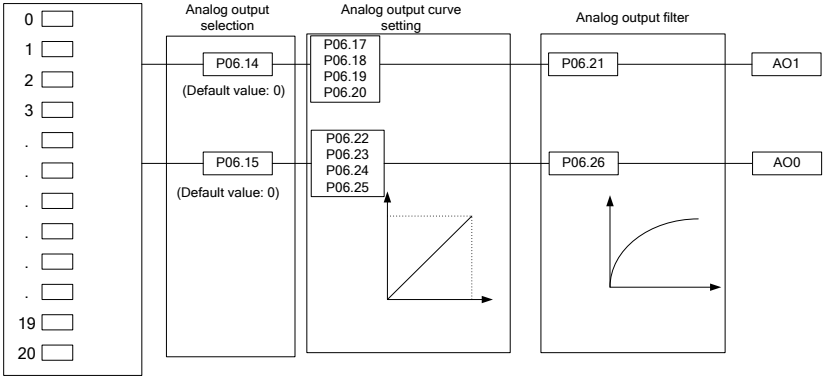

AO output relationship description:
(The min. value and max. value of the output correspond to 0.% and 100.00% of the pulse or analog default output. The actual output voltage or pulse frequency corresponds to the actual percentage, which can be set through function codes.)

Value	Function	Description
0	Running frequency	0–Max. output frequency
1	Set frequency	0–Max. output frequency
2	Ramp reference frequency	0–Max. output frequency
3	Rotational speed	0–Synchronous speed corresponding to max. output frequency
4	Output current (relative to the VFD)	0–Twice the VFD rated current
5	Output current (relative to motor)	0–Twice the motor rated current
6	Output voltage	0–1.5 times the VFD rated voltage
7	Output power	0–Twice the motor rated power
8	Set torque value (bipolar)	0–Twice the motor rated current. A negative value corresponds to 0.0% by default.
9	Output torque (absolute value)	0–±(Twice the motor rated torque)
10	AI1 input	0–10V/0–20mA
11	AI2 input	0V–10V. A negative value corresponds to 0.0% by default.

Value	Function	Description
12	AI3 input	0–10V/0–20mA
13	High-speed pulse HDIA input	0.00–50.00Hz
14	Value 1 set through Modbus communication	0–1000
15	Value 2 set through Modbus communication	0–1000
16	Value 1 set through PROFIBUS/CANopen communication	0–1000
17	Value 2 set through PROFIBUS/CANopen communication	0–1000
18	Value 1 set through Ethernet communication	0–1000
19	Value 2 set through Ethernet communication	0–1000
20	High-speed pulse HDIA input	0.00–50.00Hz
21	Value 1 set through PROFINET communication	0–1000. A negative value corresponds to 0.0% by default.
22	Torque current (bipolar)	0–Three times the motor rated current. A negative value corresponds to 0.0% by default.
23	Exciting current	0–Three times the motor rated current. A negative value corresponds to 0.0% by default.
24	Set frequency (bipolar)	0–Max. output frequency. A negative value corresponds to 0.0% by default.
25	Ramp reference frequency (bipolar)	0–Max. output frequency. A negative value corresponds to 0.0% by default.
26	Rotational speed (bipolar)	0–Synchronous rotation speed corresponding to max. output frequency. A negative value corresponds to 0.0% by default.
27	Value 2 set through PROFINET communication	0–1000
30	Rotational speed	0–Twice the motor rated synchronous rotation speed
31	Output torque (bipolar)	0–Twice the motor rated torque. A negative value corresponds to 0.0% by default.
32	PID1 output	
33	PID2 output	
34	PID1 reference value	
35	PID1 feedback value	
36	PID2 reference value	
37	PID2 feedback value	

Value	Function	Description
38–47	Reserved	

Related parameter list:

Function code	Name	Description	Default
P06.00	Reserved	Reserved	
P06.14	AO1 output	0: Running frequency (0–Max. output frequency)	0
P06.15	AO0 output		0
P06.16	Reserved	1: Set frequency (0–Max. output frequency) 2: Ramp reference frequency (0–Max. output frequency) 3: Rotational speed (0–Speed corresponding to max. output frequency) 4: Output (0–Twice the inverter unit rated current) 5: Output current (0–Twice the motor rated current) 6: Output (0–1.5 times the inverter unit rated voltage) 7: Output power (0–Twice the motor rated power) 8: Set torque (0–Twice the motor rated torque) 9: Output torque (Absolute value, 0–±Twice the motor rated torque) 10: AI1 input (0–10V/0–20mA) 11: AI2 input (0–10V) 12: AI3 input (0–10V/0–20mA) 13: HDIA input (0.00–50.00kHz) 14: Value 1 set through Modbus communication (0–1000) 15: Value 2 set through Modbus communication (0–1000) 16: Value 1 set through PROFIBUS/CANopen communication (0–1000) 17: Value 2 set through PROFIBUS/CANopen communication (0–1000) 18: Value 1 set through Ethernet communication (0–1000) 19: Value 2 set through Ethernet communication (0–1000) 20: Reserved 21: Value 1 set through PROFINET	0

Function code	Name	Description	Default
		communication (0–1000) 22: Torque current (bipolar, 0–Triple the motor rated current) 23: Exciting current (bipolar, 0–Triple the motor rated current) 24: Set frequency (bipolar, 0–Max. output frequency) 25: Ramp reference frequency (bipolar, 0–Max. output frequency) 26: Rotational speed (bipolar, 0–Speed corresponding to max. output frequency) 27: Value 2 set through PROFINET communication (0–1000) 28: C_AO1 (Reserved) 29: C_AO2 (Reserved) 30: Rotational speed (0–Twice the motor rated synchronous speed) 31: Output torque 32: PID1 output 33: PID2 output 34: PID1 reference value 35: PID1 feedback value 36: PID2 reference value 37: PID2 feedback value 38–47: Reserved	
P06.17	AO1 output lower limit	-300.0%–P06.19	0.0%
P06.18	AO1 output corresponding to lower limit	0.00V–10.00V	0.00V
P06.19	AO1 output upper limit	P06.17–300.0%	100.0%
P06.20	AO1 output corresponding to upper limit	0.00V–10.00V	10.00V
P06.21	AO1 output filter time	0.000s–10.000s	0.000s
P06.22	AO0 output lower limit	-300.0%– P06.23	0.0%
P06.23	AO0 output corresponding to lower limit	0.00V–10.00V	0.00V
P06.24	AO0 output upper limit	P06.35–300.0%	100.0%
P06.25	AO0 output corresponding to upper limit	0.00V–10.00V	10.00V
P06.26	AO0 output filter time	0.000s–10.000s	0.000s
P06.27–P06.31	Reserved		

5.5.11 Digital input

The VFD carries four programmable digital input terminals and two HDI input terminals. The function of all the digital input terminals can be programmed through function codes. HDI

input terminal can be set to act as high-speed pulse input terminal or common digital input terminal; if it is set to act as a high-speed pulse input terminal, you can also set HDIA high-speed pulse input to serve as the frequency reference and encoder signal input.

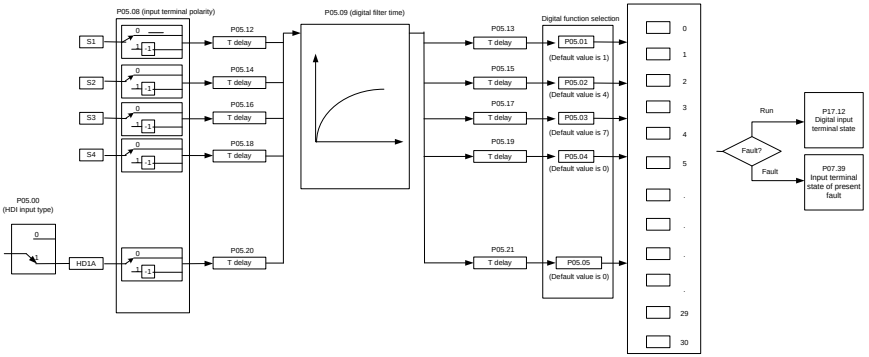

This parameter is used to set the corresponding function of digital multi-function input terminals.

Note: Two different multifunction input terminals cannot be configured with a same function.

Value	Function	Description
0	No function	The VFD does not act even if there is signal input. Set unused terminals to "no function" to avoid misaction.
1	Run forward	External terminals are used to control the forward/reverse running of the VFD.
2	Run reversely	
3	Three-wire running control	The terminal is used to determine the three-wire running control of the VFD. For details, see the description for P05.13.
4	Jog forward	For details about frequency of jogging running and ACC/DEC time of jogging running, see the description for P08.06, P08.07, and P08.08.
5	Jog reversely	
6	Coast to stop	The VFD blocks output, and the stop process of motor is uncontrolled by the VFD. This mode is applied in the scenarios with large-inertia loads and without stop time requirements. Its definition is the same as P01.08, and it is mainly used in remote control.
7	Fault reset	External fault reset function, same as the reset function of the STOP/RST key on the keypad. You can use this function to reset faults remotely.
8	Pause running	The VFD decelerates to stop, however, all the run parameters are in memory state, such as PLC and PID parameters. After this signal disappears, the VFD will revert to the state before stop.
9	External fault input	When external fault signal is transmitted to the VFD,

<table>
<tr><th>Value</th><th>Function</th><th>Description</th></tr>
<tr><td></td><td></td><td>the VFD releases fault alarm and stops.</td></tr>
<tr><td>10</td><td>Increase frequency setting (UP)</td><td rowspan="3">Used to change the frequency increase/decrease command when the frequency is given by external terminals.
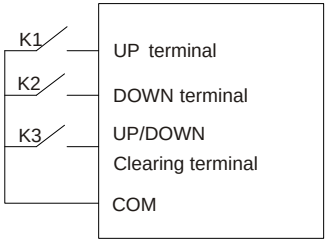

The terminal used to clear frequency-increase/decrease setting can clear the frequency value of auxiliary channel set by UP/DOWN, thus restoring the reference frequency to the frequency given by main reference frequency command channel.</td></tr>
<tr><td>11</td><td>Decrease frequency setting (DOWN)</td></tr>
<tr><td>12</td><td>Clear the frequency increase/decrease setting</td></tr>
<tr><td>13</td><td>Switch between A setting and B setting</td><td rowspan="3">The function is used to switch between the frequency setting channels.
A frequency reference channel and B frequency reference channel can be switched by function 13; the combination channel set by P00.09 and the A frequency reference channel can be switched by function 14; the combination channel set by P00.09 and the B frequency reference channel can be switched by function 15.</td></tr>
<tr><td>14</td><td>Switch between combination setting and A setting</td></tr>
<tr><td>15</td><td>Switch between combination setting and B setting</td></tr>
<tr><td>16</td><td>Multi-step speed terminal 1</td><td rowspan="4">A total of 16-step speeds can be set by combining digital states of these four terminals.
Note: Multi-step speed 1 is the LSB, and multi-step speed 4 is the MSB.
<table>
<tr><th>Multi-step speed 4</th><th>Multi-step speed 3</th><th>Multi-step speed 2</th><th>Multi-step speed 1</th></tr>
<tr><td>BIT3</td><td>BIT2</td><td>BIT1</td><td>BIT0</td></tr>
</table></td></tr>
<tr><td>17</td><td>Multi-step speed terminal 2</td></tr>
<tr><td>18</td><td>Multi-step speed terminal 3</td></tr>
<tr><td>19</td><td>Multi-step speed terminal 4</td></tr>
<tr><td>20</td><td>Pause multi-step speed running</td><td>The multi-step speed selection function can be screened to keep the set value in the present state.</td></tr>
<tr><td>21</td><td>ACC/DEC time selection 1</td><td rowspan="2">The status of the two terminals can be combined to select four groups of ACC/DEC time.
<table>
<tr><th>Terminal 1</th><th>Terminal 2</th><th>ACC/DEC time</th><th>Parameter</th></tr>
<tr><td>OFF</td><td>OFF</td><td>ACC/DEC time 1</td><td>P00.11/P00.12</td></tr>
<tr><td>ON</td><td>OFF</td><td>ACC/DEC time 2</td><td>P08.00/P08.01</td></tr>
<tr><td>OFF</td><td>ON</td><td>ACC/DEC time 3</td><td>P08.02/P08.03</td></tr>
<tr><td>ON</td><td>ON</td><td>ACC/DEC time 4</td><td>P08.04/P08.05</td></tr>
</table></td></tr>
<tr><td>22</td><td>ACC/DEC time selection 2</td></tr>
</table>

Value	Function	Description
23	Simple PLC stop reset	Used to clear the previous PLC state memory information and restart the simple PLC process.
24	Pause simple PLC	Used to pause the simple PLC. When the function is revoked, the simple PLC resumes the running.
25	Pause PID control	PID is ineffective temporarily, and the VFD maintains current frequency output.
26	Pause wobbling frequency	
27	Reset wobbling frequency	
28	Reset the counter	The counter is cleared.
29	Switch between speed control and torque control	The VFD switches from torque control mode to speed control mode, or vice versa.
30	Disable ACC/DEC	Used to ensure the VFD is not impacted by external signals (except for stop command), and maintains the present output frequency.
31	Trigger the counter	Used to enable the counter to count pulses.
33	Clear the frequency increase/decrease setting temporarily	When the terminal is closed, the frequency value set by UP/DOWN can be cleared to restore the reference frequency to the frequency given by frequency command channel; when the terminal is opened, it restores to the frequency value after frequency increase/decrease setting.
34	DC braking	The VFD starts DC brake immediately after the command becomes valid.
35	Switch between motor 1 and motor 2	When the function is enabled, you can realize switchover control of two motors.
36	Switch the running command channel to keypad	When the function is enabled, the running command channel is switched to keypad. When the function is disabled, the running command channel is restored to the previous setting.
37	Switch the running command channel to terminal	When the function is enabled, the running command channel is switched to terminal. When the function is disabled, the running command channel is restored to the previous setting.
38	Switch the running command channel to communication	When the function is enabled, the running command channel is switched to communication. When the function is disabled, the running command channel is restored to the previous setting.
39	Pre-exciting command	When the function is enabled, motor pre-exciting is started until the function becomes invalid.
40	Clear power consumption quantity	After this command becomes valid, the power consumption quantity of the VFD will be zeroed out.
41	Keep power consumption quantity	When the function is enabled, the present operation of the VFD does not impact the power consumption quantity.
42	Switch the setting source of braking torque upper	The torque upper limit is set through the keypad when the command is valid.

Value	Function	Description
	limit to keypad	
43–55	Reserved	
56	Emergency stop	
57–72	Reserved	
73	PID2 start	When the command is valid, PID2 starts.
74	PID2 stop	When the command is valid, PID2 stops.
75	Pause PID2 integral	When the command is valid, PID2 integral is paused.
76	Pause PID2 control	When the command is valid, PID2 control is paused.
77	Switch PID2 polarities	When the command is valid, PID2 polarity is switched.
78	Disable HVAC (only in stopped state)	When the command is valid, HVAC is disabled (only in stopped state).
79	Trigger fire signal	When the command is valid, fire signal is triggered.
80	Pause PID1 control	When the command is valid, PID1 control is paused.
81	Pause PID1 integral	When the command is valid, PID1 integral is paused.
82	Switch PID1 polarities	When the command is valid, PID1 polarity is switched.
83	Trigger sleep mode	When the command is valid, the sleep mode is triggered.
84	Trigger wakeup mode	When the command is valid, the wakeup mode is triggered.
85	Manual polling	When the command is valid, manual polling is enabled.
86	Pump cleaning signal	When the command is valid, pump cleaning signal is triggered.
87	Water level upper limit of inlet pool	When the command is valid, the water level upper limit of inlet pool is reached.
88	Water level lower limit of inlet pool	When the command is valid, the water level lower limit of inlet pool is reached.
89	Water shortage level of inlet pool	When the command is valid, the water shortage level of inlet pool is reached.
90–95	Reserved	
96	Manual soft startup for motor A	When the command is valid, soft startup for motor A is performed manually.
97	Manual soft startup for motor B	When the command is valid, soft startup for motor B is performed manually.
98	Manual soft startup for motor C	When the command is valid, soft startup for motor C is performed manually.
99	Manual soft startup for motor D	When the command is valid, soft startup for motor D is performed manually.
100	Manual soft startup for motor E	When the command is valid, soft startup for motor E is performed manually.
101	Manual soft startup for motor F	When the command is valid, soft startup for motor F is performed manually.
102	Manual soft startup for motor G	When the command is valid, soft startup for motor G is performed manually.

Value	Function	Description
103	Manual soft startup for motor H	When the command is valid, soft startup for motor H is performed manually.
104	Disable motor A	When the command is valid, motor A is disabled.
105	Disable motor B	When the command is valid, motor B is disabled.
106	Disable motor C	When the command is valid, motor C is disabled.
107	Disable motor D	When the command is valid, motor D is disabled.
108	Disable motor E	When the command is valid, motor E is disabled.
109	Disable motor F	When the command is valid, motor F is disabled.
110	Disable motor G	When the command is valid, motor G is disabled.
111	Disable motor H	When the command is valid, motor H is disabled.

Related parameter list:

Function code	Name	Description	Default
P05.00	HDI input type	0x00–0x11 Ones place: HDIA input type 0: HDIA is high-speed pulse input 1: HDIA is digital input Tens place: Reserved	0x00
P05.01	Function of S1	0: No function 1: Run forward 2: Run reversely 3: Three-wire running control 4: Jog forward 5: Jog reversely 6: Coast to stop 7: Reset faults 8: Pause running 9: External fault input 10: Increase frequency setting (UP) 11: Decrease frequency setting (DOWN) 12: Clear the frequency increase/decrease setting 13: Switch between A setting and B setting 14: Switch between combination setting and A setting 15: Switch between combination setting and B setting 16: Multi-step speed terminal 1 17: Multi-step speed terminal 2 18: Multi-step speed terminal 3 19: Multi-step speed terminal 4 20: Pause multi-step speed running 21: ACC/DEC time selection 1 22: ACC/DEC time selection 2 23: Simple PLC stop reset	1
P05.02	Function of S2		4
P05.03	Function of S3		7
P05.04	Function of S4		0
P05.05	Function of HDIA		0
P05.06	Reserved		
P05.07	Reserved		

Function code	Name	Description	Default
		24: Pause simple PLC 25: Pause PID control 26: Pause wobbling frequency 27: Reset wobbling frequency 28: Counter reset 29: Switch between speed control and torque control 30: Disable ACC/DEC 31: Trigger the counter 32: Reserved 33: Clear the frequency increase/decrease setting temporarily 34: DC braking 35: Switch from motor 1 to motor 2 36: Switch the running command channel to keypad 37: Switch the running command channel to terminal 38: Switch the running command channel to communication 39: Pre-exciting command 40: Clear electricity consumption 41: Keep electricity consumption 42: Switch the setting source of braking torque upper limit to keypad 43–55: Reserved 56: Emergency stop 57–72: Reserved 73: PID2 start 74: PID2 stop 75: Pause PID2 integral 76: Pause PID2 control 77: Switch PID2 polarities 78: Disable HVAC (only in stopped state) 79: Trigger fire signal 80: Pause PID1 control 81: Pause PID1 integral 82: Switch PID1 polarities 83: Trigger sleep mode 84: Trigger wakeup mode 85: Manual polling 86: Pump cleaning signal 87: Water level upper limit of inlet pool 88: Water level lower limit of inlet pool 89: Water shortage level of inlet pool 90–95: Reserved 96: Manual soft startup for motor A	

Function code	Name	Description	Default
		97: Manual soft startup for motor B 98: Manual soft startup for motor C 99: Manual soft startup for motor D 100: Manual soft startup for motor E 101: Manual soft startup for motor F 102: Manual soft startup for motor G 103: Manual soft startup for motor H 104: Disable motor A 105: Disable motor B 106: Disable motor C 107: Disable motor D 108: Disable motor E 109: Disable motor F 110: Disable motor G 111: Disable motor H	
P05.08	Input terminal polarity	0x00–0x3F	0x00
P05.09	Digital input filter time	0.000–1.000s	0.010s
P05.10	Virtual terminal setting	0x00–0x3F (0: Disable. 1: Enable) BIT0: S1 virtual terminal BIT1: S2 virtual terminal BIT2: S3 virtual terminal BIT3: S4 virtual terminal BIT4: HDIA virtual terminal BIT5: Reserved	0x00
P05.11	Terminal control mode	0: Two-wire control mode 1 1: Two-wire control mode 2 2: Three-wire control mode 1 3: Three-wire control mode 2	0
P05.12	S1 switch-on delay	0.000–50.000s	0.000s
P05.13	S1 switch-off delay	0.000–50.000s	0.000s
P05.14	S2 switch-on delay	0.000–50.000s	0.000s
P05.15	S2 switch-off delay	0.000–50.000s	0.000s
P05.16	S3 switch-on delay	0.000–50.000s	0.000s
P05.17	S3 switch-off delay	0.000–50.000s	0.000s
P05.18	S4 switch-on delay	0.000–50.000s	0.000s
P05.19	S4 switch-off delay	0.000–50.000s	0.000s
P05.20	HDIA switch-on delay	0.000–50.000s	0.000s
P05.21	HDIA switch-off delay	0.000–50.000s	0.000s
P05.22–P05.23	Reserved		

Function code	Name	Description	Default
P07.39	Input terminal status at present fault	0x0000–0xFFFF	0x0000
P17.12	Digital input terminal status	0x0000–0xFFFF	0x0000

5.5.12 Digital output

The VFD carries two groups of relay output terminals and one open collector Y output terminal. The function of all the digital output terminals can be programmed through function codes.

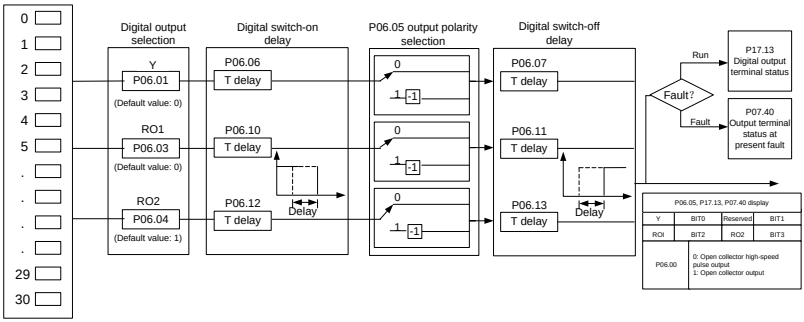

The following table lists the function code options. A same output terminal function can be repeatedly selected.

Value	Function	Description
0	Invalid	The output terminal does not have any function.
1	Running	The ON signal is output when there is frequency output during running.
2	Running forward	The ON signal is output when there is frequency output during forward running.
3	Running reversely	The ON signal is output when there is frequency output during reverse running.
4	Jogging	The ON signal is output when there is frequency output during jogging.
5	VFD in fault	The ON signal is output when a VFD fault occurred.
6	Frequency level detection FDT1	Refer to the description for P08.32 and P08.33
7	Frequency level detection FDT2	Refer to the description for P08.34 and P08.35

Value	Function	Description
8	Frequency reached	Refer to the description for P08.36
9	Running in zero speed	The ON signal is output when the VFD output frequency and reference frequency are both zero.
10	Upper limit frequency reached	The ON signal is output when the running frequency reaches the upper limit frequency.
11	Lower limit frequency reached	The ON signal is output when the running frequency reaches the lower limit frequency.
12	Ready for running	The ON signal is output when main circuit and control circuit powers are established, the protection functions do not act, and the VFD is ready to run.
13	Pre-exciting	The ON signal is output when the VFD is in pre-exciting.
14	Overload pre-alarm	Output ON signal after the pre-alarm time elapsed based on the pre-alarm threshold; see P11.08–P11.10 for details.
15	Underload pre-alarm	The ON signal is output after the pre-alarm time elapsed based on the pre-alarm threshold. For details, see the descriptions for P11.11–P11.12.
16	Simple PLC stage completed	When the present state of the simple PLC is completed, it outputs a signal.
17	Simple PLC cycle completed	When a single cycle of the simple PLC is completed, it outputs a signal.
18	Set counting value reached	
19	Designated counting value reached	
20	External fault is valid	
21	Reserved	
22	Running time reached	
23	Modbus communication virtual terminal output	A signal is output based on the value set through Modbus communication. When the value is 1, the ON signal is output; when the value is 0, the OFF signal is output.
24	POROFIBUS/CANopen communication virtual terminal output	A signal is output based on the value set through PROFIBUS/CANopen communication. When the value is 1, the ON signal is output; when the value is 0, the OFF signal is output.
25	Ethernet communication virtual terminal output	A signal is output based on the value set through Ethernet communication. When the value is 1, the ON signal is output; when the value is 0, the OFF signal is output.
26	DC bus voltage established	When the bus voltage is above the inverter undervoltage, the output is valid.

Value	Function	Description
27–32	Reserved	
33	In speed limit	
34	PROFINET communication virtual terminal output	A signal is output based on the value set through PROFINET communication. When the value is 1, the ON signal is output; when the value is 0, the OFF signal is output.
35–36	Reserved	
37	Any frequency reached	
38–47	Reserved	
48	Fire mode activated	
49	Pre-alarm of PID1 feedback too low	
50	Pre-alarm of PID1 feedback too high	
51	PID1 in sleep	
52	PID2 in startup	
53	PID2 stopped	
54	Indication of run with backup pressure	
55	Water shortage indication of inlet pool	
56	Pre-alarm output	
57	Control variable-frequency circulation motor A	
58	Control variable-frequency circulation motor B	
59	Control variable-frequency circulation motor C	
60	Control variable-frequency circulation motor D	
61	Control variable-frequency circulation motor E	
62	Control variable-frequency circulation motor F	
63	Control variable-frequency circulation motor G	
64	Control variable-frequency circulation motor H	

Related parameter list:

Function code	Name	Description	Default
P06.00	Reserved	Reserved	
P06.01	Y1 output	0: Invalid	0
P06.02	Reserved	1: Running	

Function code	Name	Description	Default
P06.03	RO1 output	2: Running forward	1
P06.04	Reserved	3: Running reversely 4: Jogging 5: VFD in fault 6: Frequency level detection FDT1 7: Frequency level detection FDT2 8: Frequency reached 9: Running in zero speed 10: Upper limit frequency reached 11: Lower limit frequency reached 12: Ready for running 13: Pre-exciting 14: Overload pre-alarm 15: Underload pre-alarm 16: Simple PLC stage completed 17: Simple PLC cycle completed 18: Set counting value reached 19: Designated counting value reached 20: External fault is valid 21: Reserved 22: Running time reached 23: Modbus communication virtual terminal output 24: PROFIBUS/CANopen communication virtual terminal output 25: Ethernet communication virtual terminal output 26: DC bus voltage established 27: Z pulse output 28: Superposing pulses 29: STO action 30: Positioning completed 31: Spindle zeroing completed 32: Spindle scale division completed 33: In speed limit 34: PROFINET communication virtual terminal output 35: Reserved 36: Speed/position control switchover completed 37: Any frequency reached 38–47: Reserved 48: Fire mode activated 49: Pre-alarm of PID1 feedback too low 50: Pre-alarm of PID1 feedback too high 51: PID1 in sleep 52: PID2 in startup	

Function code	Name	Description	Default
		53: PID2 stopped 54: Indication of run with backup pressure 55: Water shortage indication of inlet pool 56: Pre-alarm output 57: Control variable-frequency circulation motor A 58: Control variable-frequency circulation motor B 59: Control variable-frequency circulation motor C 60: Control variable-frequency circulation motor D 61: Control variable-frequency circulation motor E 62: Control variable-frequency circulation motor F 63: Control variable-frequency circulation motor G 64: Control variable-frequency circulation motor H	
P06.05	Output terminal polarity selection	0x00–0x0F	0x00
P06.06	Y switch-on delay	0.000–50.000s	0.000s
P06.07	Y switch-off delay	0.000–50.000s	0.000s
P06.08	Reserved	Reserved	
P06.09	Reserved	Reserved	
P06.10	RO1 switch-on delay	0.000–50.000s	0.000s
P06.11	RO1 switch-off delay	0.000–50.000s	0.000s
P06.12	Reserved	Reserved	
P06.13	Reserved	Reserved	
P07.40	Output terminal status at present fault	0x0000–0xFFFF	0x0000
P17.13	Digital output terminal status	0x0000–0x000F	0x0000

5.5.13 Simple PLC

Simple PLC is a multi-step speed generator, and the VFD can change the running frequency and direction automatically based on the running time to fulfill process requirements. Previously, such function was realized with external PLC, while now, the VFD itself can achieve this function.

The VFD can realize 16-step speed control, and provide four groups of acceleration/deceleration time for choose.

After the set PLC completes one cycle (or one step), one ON signal can be output by the multifunction relay.

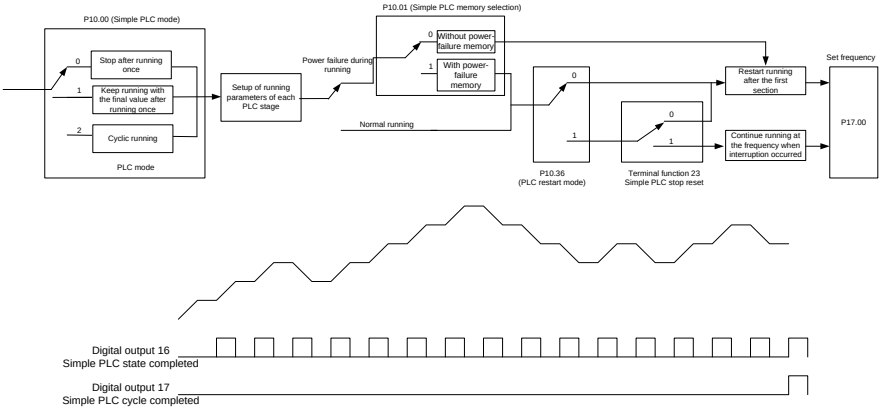

Related parameter list:

Function code	Name	Description	Default
P05.01–P05.06	Digital input function selection	23: Simple PLC stop reset 24: Pause simple PLC 25: Pause PID control	
P06.01–P06.04	Digital output function selection	16: Simple PLC stage reached 17: Simple PLC cycle reached	
P10.00	Simple PLC mode	0: Stop after running once 1: Keep running with the final value after running once 2: Cyclic running	0
P10.01	Simple PLC memory selection	0: Without memory at power failure 1: With power-failure memory	0
P10.02	Multi-step speed 0	-100.0–100.0%	0.0%
P10.03	Running time of step 0	0.0–6553.5s (min)	0.0s
P10.04	Multi-step speed 1	-100.0–100.0%	0.0%
P10.05	Running time of step 1	0.0–6553.5s (min)	0.0s
P10.06	Multi-step speed 2	-100.0–100.0%	0.0%
P10.07	Running time of step 2	0.0–6553.5s (min)	0.0s
P10.08	Multi-step speed 3	-100.0–100.0%	0.0%
P10.09	Running time of step 3	0.0–6553.5s (min)	0.0s
P10.10	Multi-step speed 4	-100.0–100.0%	0.0%
P10.11	Running time of step 4	0.0–6553.5s (min)	0.0s
P10.12	Multi-step speed 5	-100.0–100.0%	0.0%
P10.13	Running time of step 5	0.0–6553.5s (min)	0.0s
P10.14	Multi-step speed 6	-100.0–100.0%	0.0%
P10.15	Running time of step 6	0.0–6553.5s (min)	0.0s
P10.16	Multi-step speed 7	-100.0–100.0%	0.0%
P10.17	Running time of step 7	0.0–6553.5s (min)	0.0s

Function code	Name	Description	Default
P10.18	Multi-step speed 8	-100.0–100.0%	0.0%
P10.19	Running time of step 8	0.0–6553.5s (min)	0.0s
P10.20	Multi-step speed 9	-100.0–100.0%	0.0%
P10.21	Running time of step 9	0.0–6553.5s (min)	0.0s
P10.22	Multi-step speed 10	-100.0–100.0%	0.0%
P10.23	Running time of step 10	0.0–6553.5s (min)	0.0s
P10.24	Multi-step speed 11	-100.0–100.0%	0.0%
P10.25	Running time of step 11	0.0–6553.5s (min)	0.0s
P10.26	Multi-step speed 12	-100.0–100.0%	0.0%
P10.27	Running time of step 12	0.0–6553.5s (min)	0.0s
P10.28	Multi-step speed 13	-100.0–100.0%	0.0%
P10.29	Running time of step 13	0.0–6553.5s (min)	0.0s
P10.30	Multi-step speed 14	-100.0–100.0%	0.0%
P10.31	Running time of step 14	0.0–6553.5s (min)	0.0s
P10.32	Multi-step speed 15	-100.0–100.0%	0.0%
P10.33	Running time of step 15	0.0–6553.5s (min)	0.0s
P10.34	ACC/DEC time of steps 0–7 of simple PLC	0x0000–0XFFFF	0x0000
P10.35	ACC/DEC time of steps 8–15 of simple PLC	0x0000–0XFFFF	0x0000
P10.36	PLC restart mode	0: Restart from step 0 1: Resume from the paused step	0
P17.00	Set frequency	0.00Hz–P00.03(Max. output frequency)	0.00Hz
P17.27	Present step of simple PLC	Used to display the present step of the simple PLC function. Range: 0–15	0

5.5.14 Multi-step speed running

Set the parameters used in multi-step speed running. The VFD can set 16-step speeds, which are selectable by multi-step speed terminals 1–4, corresponding to multi-step speed 0 to multi-step speed 15.

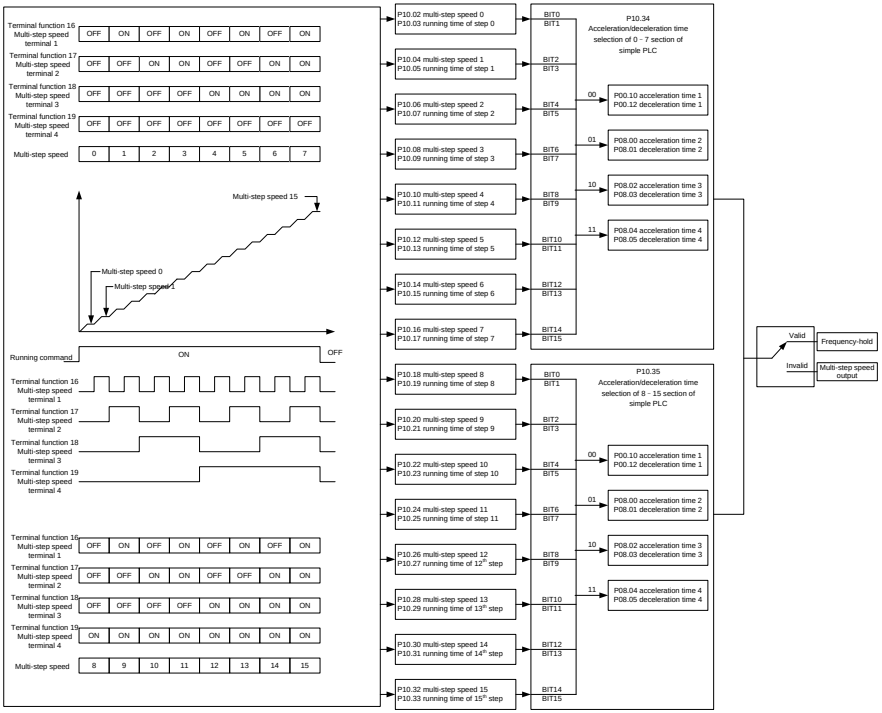

Related parameter list:

Function code	Name	Description	Default
P05.01–P05.06	Digital input function selection	16: Multi-step speed terminal 1 17: Multi-step speed terminal 2 18: Multi-step speed terminal 3 19: Multi-step speed terminal 4 20: Pause multi-step speed running	
P10.02	Multi-step speed 0	-100.0–100.0%	0.0%
P10.03	Running time of step 0	0.0–6553.5s (min)	0.0s
P10.04	Multi-step speed 1	-100.0–100.0%	0.0%
P10.05	Running time of step 1	0.0–6553.5s (min)	0.0s
P10.06	Multi-step speed 2	-100.0–100.0%	0.0%

Function code	Name	Description	Default
P10.07	Running time of step 2	0.0–6553.5s (min)	0.0s
P10.08	Multi-step speed 3	-100.0–100.0%	0.0%
P10.09	Running time of step 3	0.0–6553.5s (min)	0.0s
P10.10	Multi-step speed 4	-100.0–100.0%	0.0%
P10.11	Running time of step 4	0.0–6553.5s (min)	0.0s
P10.12	Multi-step speed 5	-100.0–100.0%	0.0%
P10.13	Running time of step 5	0.0–6553.5s (min)	0.0s
P10.14	Multi-step speed 6	-100.0–100.0%	0.0%
P10.15	Running time of step 6	0.0–6553.5s (min)	0.0s
P10.16	Multi-step speed 7	-100.0–100.0%	0.0%
P10.17	Running time of step 7	0.0–6553.5s (min)	0.0s
P10.18	Multi-step speed 8	-100.0–100.0%	0.0%
P10.19	Running time of step 8	0.0–6553.5s (min)	0.0s
P10.20	Multi-step speed 9	-100.0–100.0%	0.0%
P10.21	Running time of step 9	0.0–6553.5s (min)	0.0s
P10.22	Multi-step speed 10	-100.0–100.0%	0.0%
P10.23	Running time of step 10	0.0–6553.5s (min)	0.0s
P10.24	Multi-step speed 11	-100.0–100.0%	0.0%
P10.25	Running time of step 11	0.0–6553.5s (min)	0.0s
P10.26	Multi-step speed 12	-100.0–100.0%	0.0%
P10.27	Running time of step 12	0.0–6553.5s (min)	0.0s
P10.28	Multi-step speed 13	-100.0–100.0%	0.0%
P10.29	Running time of step 13	0.0–6553.5s (min)	0.0s
P10.30	Multi-step speed 14	-100.0–100.0%	0.0%
P10.31	Running time of step 14	0.0–6553.5s (min)	0.0s
P10.32	Multi-step speed 15	-100.0–100.0%	0.0%
P10.33	Running time of step 15	0.0–6553.5s (min)	0.0s
P10.34	ACC/DEC time of steps 0–7 of simple PLC	0x0000–0XFFFF	0000
P10.35	ACC/DEC time of steps 8–15 of simple PLC	0x0000–0XFFFF	0000
P17.27	Present step of simple PLC	Used to display the present step of the simple PLC function.	0

5.5.15 PID control

PID control, a common mode for process control, is mainly used to adjust the VFD output frequency or output voltage by performing scale-division, integral and differential operations on the difference between feedback signal of controlled variables and signal of the target, thus forming a negative feedback system to keep the controlled variables above the target. It is applicable to flow control, pressure control, temperature control, and so on. The following is the basic schematic block diagram for output frequency regulation.

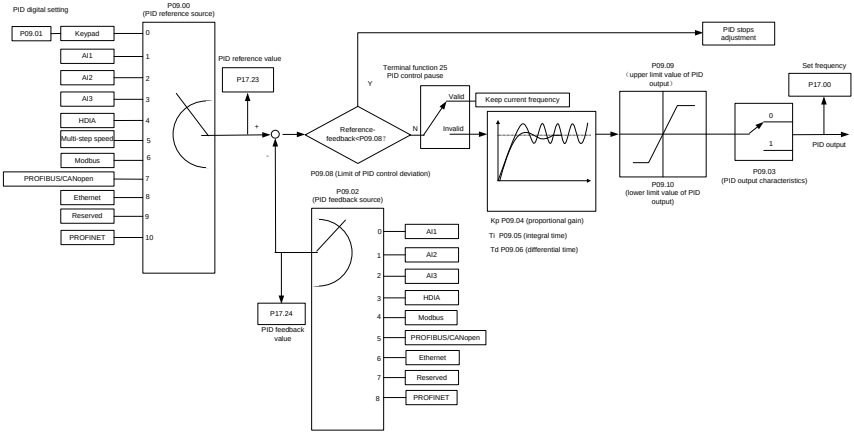

Introduction to the working principles and control methods for PID control:

Proportional control (Kp): When the feedback is different from the reference, the output will be proportional to the difference. If such a difference is constant, the regulating variable will also be constant. Proportional control can respond to feedback changes rapidly, however, it cannot eliminate the difference by itself. A larger proportional gain indicates a faster regulating speed, but a too large gain will result in oscillation. To solve this problem, set the integral time to a large value and the differential time to 0, run the system only with proportional control, and then change the reference to observe the difference (that is, static difference) between the feedback signal and reference. If the static difference occurs in the direction of reference change (such as reference increase, where the feedback is always less than the reference after system stabilizes), continue increasing the proportional gain; otherwise, decrease the proportional gain. Repeat this process until the static difference becomes small.

Integral time (Ti): When feedback is different from reference, the output regulating variable accumulates continuously, if the difference persists, the regulating variable will increase continuously until difference disappears. The integral regulator can be used to eliminate static difference. However, too large regulation may lead to repetitive overshoot, which will cause system instability and oscillation. The feature of oscillation caused by strong integral effect is that the feedback signal fluctuates up and down based on the reference variable, and fluctuation range increases gradually until oscillation occurs. The integral time parameter is generally regulated gradually from large to small until the stabilized system speed fulfills the requirement.

Differential time (Td): When the difference between feedback and reference changes, there is output of the regulating variable that is proportional to the difference variation rate, and this regulating variable is only related to the direction and magnitude of the difference change rather than the direction and magnitude of the difference itself. Differential control is used to control the feedback signal variation based on the change trend. Exercise caution before using the differential regulator since it may enlarge the system interferences, especially those with high change frequency.

When frequency command selection (P00.06, P00. 07) is 7, or channel of voltage setup (P04.27) is 6, the running mode of VFD is process PID control.

5.5.15.1 General procedures for PID parameter setup

1. Determine proportional gain P.

   When determining proportional gain P, first, remove the integral term and derivative term of PID by making Ti=0 and Td=0 (see PID parameter setup for details), thus turning PID into pure proportional control. Set the input to 60%–70% of the max. allowable value, and increase proportional gain P gradually from 0 until system oscillation occurred, and then in turn, decrease proportional gain P gradually from current value until system oscillation disappears, record the proportional gain P at this point and set the proportional gain P of PID to 60%–70% of current value. This is the entire commissioning procedure of proportional gain P.

2. Determine integral time Ti.

   After proportional gain P is determined, set the initial value of integral time Ti to a large value, and decrease Ti gradually until system oscillation occurs. Then in reverse, increase Ti until system oscillation disappears. Record the value of Ti at this point. Set the integral time constant Ti of PID to 150%–180% of this value. This is the commissioning procedure of integral time constant Ti.

3. Determine derivative time Td.

   The differential time Td is generally set to 0.

   If you need to set Td to another value, the setting method is similar to that for P and Ti, namely, set Td to 30% of the value when there is no oscillation.

4. Empty system load, perform load-carrying joint debugging, and then adjust PID parameters until fulfilling the requirement.

5.5.15.2 How to fine-tune PID

After setting the parameters controlled by PID, you can adjust these parameters by the following means.

Control overshoot: When overshoot occurred, shorten the derivative time (Td) and prolong integral time (Ti).

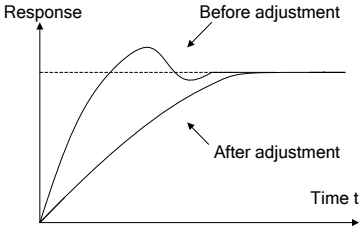

Stabilize the feedback value as fast as possible: When overshoot occurred, shorten integral time (Ti) and prolong derivative time (Td) to stabilize control as fast as possible.

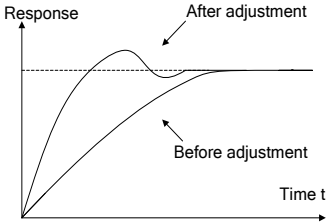

Control long-term vibration: If the cycle of periodic vibration is longer than the set value of integral time (Ti), it indicates the integral action is too strong, prolong the integral time (Ti) to control vibration.

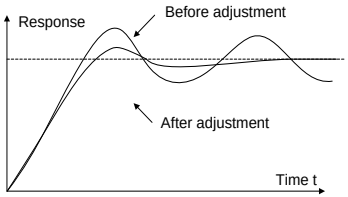

Control short-term vibration: If the vibration cycle is as short almost the same as the set value of differential time (Td), it indicates the differential action is too strong. Shorten the differential time (Td) to control vibration. When the differential time (Td) is set to 0.00 (namely no differential control), and there is no way to control vibration, decrease the proportional gain.

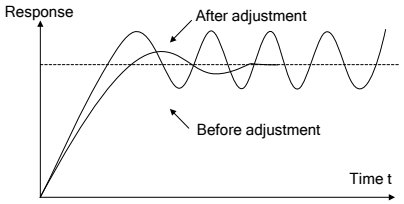

Related parameter list:

Function code	Name	Description	Default
P09.00	PID reference source	0: Set by P09.01 1: AI1 2: AI2 3: AI3 4: High-speed pulse HDIA 5: Multi-step running 6: Modbus communication 7: PROFIBUS/CANopen communication 8: Ethernet communication 9: Reserved 10: PROFINET communication	0
P09.01	PID digital setting	-100.0%–100.0%	0.0%
P09.02	PID feedback source	0: AI1 1: AI2 2: AI3 3: High-speed pulse HDIA 4: Modbus communication 5: PROFIBUS/CANopen communication 6: Ethernet communication 7: Reserved 8: PROFINET communication	0
P09.03	PID output characteristics selection	0: PID output is positive. 1: PID output is negative.	0
P09.04	Proportional gain (Kp)	0.00–100.00	1.80
P09.05	Integral time (Ti)	0.01–10.00s	0.90s
P09.06	Differential time (Td)	0.00–10.00s	0.00s
P09.07	Sampling cycle (T)	0.000–10.000s	0.100s
P09.08	PID control deviation limit	0.0–100.0%	0.0%
P09.09	PID output upper limit	P09.10–100.0% (Max. frequency or voltage)	100.0%

Function code	Name	Description	Default
P09.10	PID output lower limit	-100.0%–P09.09 (Max. frequency or voltage)	0.0%
P09.11	Feedback offline detection value	0.0–100.0%	0.0%
P09.12	Feedback offline detection time	0.0–3600.0s	1.0s
P09.13	PID control selection	0x0000–0x1111 Ones place: 0: Continue integral control after the frequency reaches upper/lower limit 1: Stop integral control after the frequency reaches upper/lower limit Tens place: 0: Same as the main reference direction 1: Contrary to the main reference direction Hundreds place: 0: Limit as per the max. frequency 1: Limit as per A frequency Thousands place: 0: A+B frequency. ACC/DEC of main reference A frequency source buffering is invalid. 1: A+B frequency. ACC/DEC of main reference A frequency source buffering is valid. The ACC/DEC is determined by P08.04 (ACC time 4).	0x0001
P09.14	Low frequency proportional gain (Kp)	0.00–100.00	1.00
P09.15	ACC/DEC time of PID command	0.0–1000.0s	0.0s
P09.16	PID output filter time	0.000–10.000s	0.000s
P09.17	Reserved		
P09.18	Low frequency integral time (Ti)	0.00–10.00s	0.90s
P09.19	Low frequency differential time (Td)	0.00–10.00s	0.00s
P09.20	Low frequency point for PID parameter switching	0.00–P09.21	5.00Hz
P09.21	High frequency point for PID parameter switching	P09.20–P00.04	10.00Hz

Function code	Name	Description	Default
P17.00	Set frequency	0.00Hz–P00.03 (Max. output frequency)	0.00Hz
P17.23	PID reference value	-100.0–100.0%	0.0%
P17.24	PID feedback value	-100.0–100.0%	0.0%

5.5.16 Water pump control

The VFD provides the multi-pump control function, applicable to the scenario with the simultaneous operation of up to eight water pumps, capable of balancing fluctuations in water pressure and flow. This function simplifies the control system and controls the start and stop of each pump motor in balance mode to ensure optimal performance of the water system. To use this function, configure the following sub-functions based on requirements:

- Motor adding or reducing
- Multi-pump polling
- Water pump maintenance
- Smooth switchover

Function description

The following describes the function by illustrating a typical case in which one VFD controls four water pump motors.

The VFD must use the four relay function terminals RO5–RO8 (requiring the use of the optional part EC-IO503-00), and also use two groups of contactor KM to switch between the two water pump working states, variable-frequency run mode and power-frequency run mode. All motors are started and stopped at the ramp speed to achieve soft motor switchover to ensure stable water supply pressure and reduce the impact on water pipes. You need to refer to Figure 5-28 and Figure 5-29 to connect the multi-pump variable-frequency control main circuit and external relay control circuit. In addition, make the following settings:

1. Enable the multi-pump control function (P94.00=1).

2. Set the variable-frequency motor run mode to circular (P94.10=1).

3. Set the motor quantity to 4 (P94.11=4).

4. Set RO5–RO8 to control variable-frequency circulation pumps A, B, C, and D (that is, set P26.06–P26.09 to 57–60 respectively).

5. Set the contactor closing delay, which is the interval of switchover between the variable-frequency run mode and power-frequency run mode.

6. Configure the S digital input terminal function and set it to 104–107 to disconnect the cyclic motors M1–M4.

Note:

- After the multi-pump control function is enabled, the VFD setting frequency can be given only by the water supply dedicated PID—PID1.
- It is not recommended to use the multi-pump control function on the 30kW or higher VFDs.

- Connected water pump motors must have the same rated power.

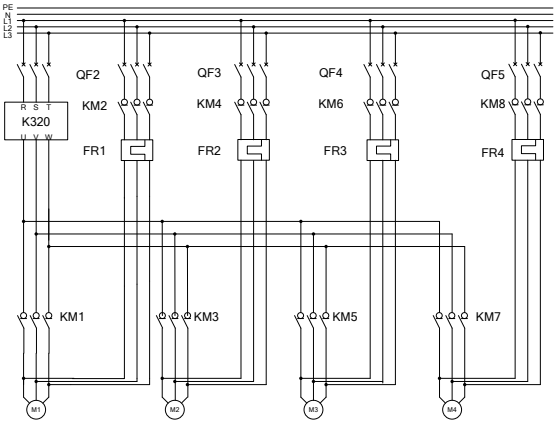

KM1–KM8: Contactors

FR1–FR4: Thermal protection overload relays

QF2–QF5: Low-voltage breakers

M1–M4: Asynchronous motors

Figure 5-28 Main circuit wiring in variable-frequency control mode of one VFD driving four pumps

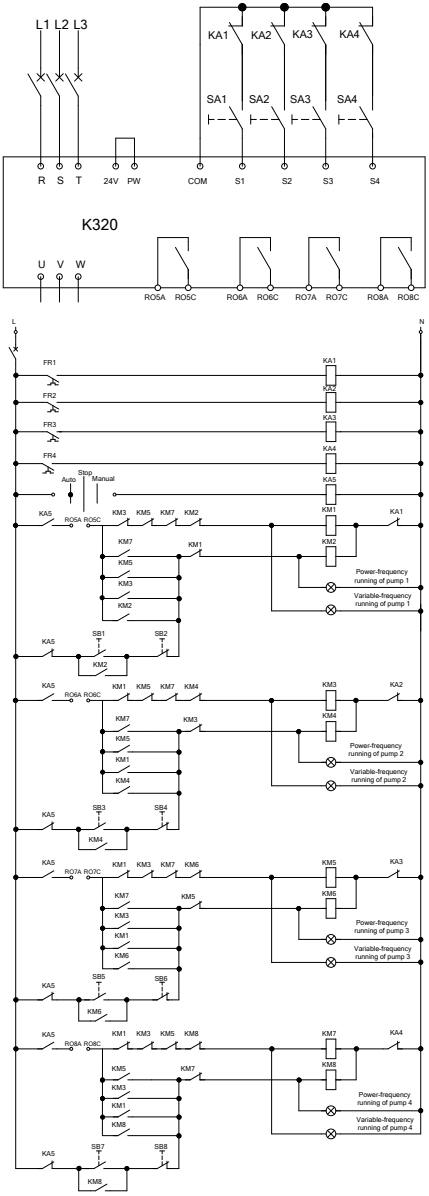

Figure 5-29 External relay control wiring (with four pumps)

If you use one VFD to control three pump motors to perform the cyclic variable-frequency function, refer to Figure 5-30 to connect the external relay control circuit.

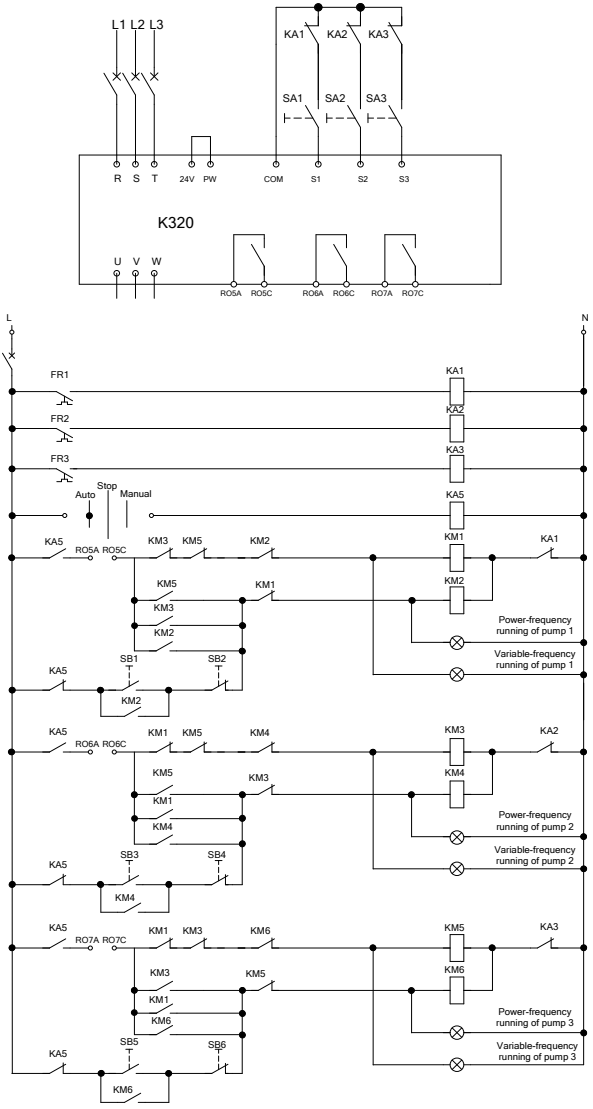

Figure 5-30 External relay control wiring (with three pumps)

If you use one VFD to control two pump motors to perform the cyclic variable-frequency function, refer to Figure 5-31 to connect the external relay control circuit.

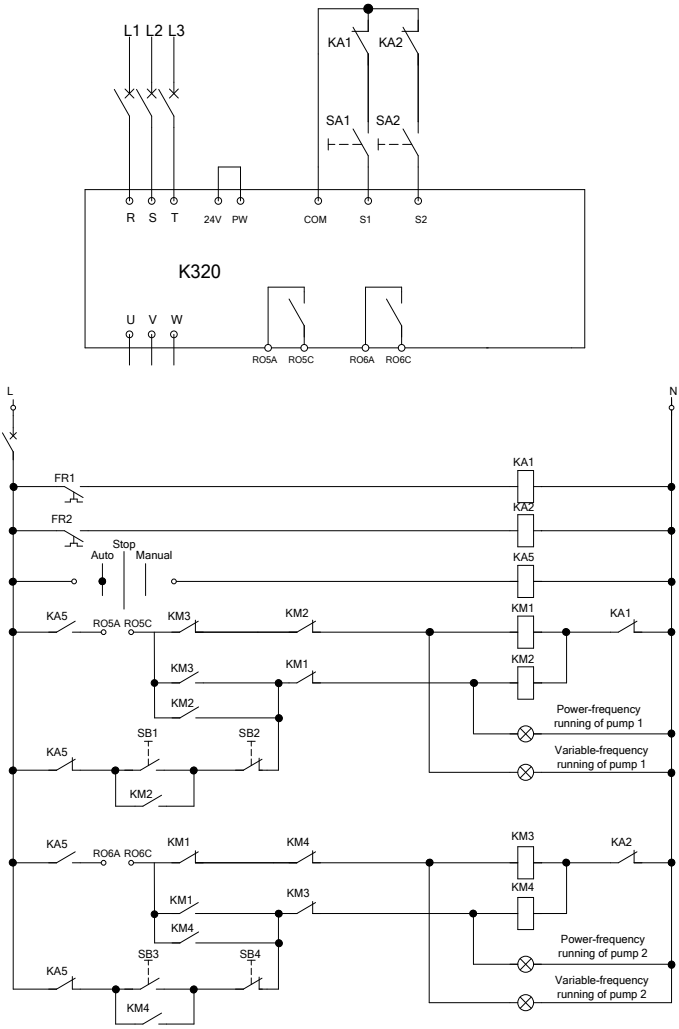

Figure 5-31 External relay control wiring (with two pumps)

Related parameter list:

Function code	Name	Description	Value	Modify
P94.00	HVAC function selection	0: Invalid 1: Valid	1	◎

Function code	Name	Description	Value	Modify
P94.10	Variable-frequency motor run mode	0: Fixed 1: Circular	1	◎
P94.11	Total number of motors	0–8: Corresponding to motors A–H. The sequence numbers must be successive.	4	◎
P26.06	RO5 output	0–47: Same as those for standard models 48: Fire mode activated 49: Pre-alarm of PID1 feedback too low 50: Pre-alarm of PID1 feedback too high 51: VFD in sleep 52: PID2 in running 53: PID2 stop 54: Indication of run with backup pressure 55: Water shortage indication of inlet pool 56: Pre-alarm 57: Control variable-frequency circulation pump A 58: Control variable-frequency circulation pump B 59: Control variable-frequency circulation pump C 60: Control variable-frequency circulation pump D 61: Control variable-frequency circulation motor E 62: Control variable-frequency circulation motor F 63: Control variable-frequency circulation motor G 64: Control variable-frequency circulation motor H 65: Low-temperature pre-alarm 66: Stalling pre-alarm 67: Dry-pumping pre-alarm	57	○
P26.07	RO6 output		58	○
P26.08	RO7 output		59	○
P26.09	RO8 output		60	○
P94.36	Contactor closing delay	0.2–100.0s	0.5s	○
P94.37	Contactor opening delay	0.2–100.0s	0.5s	○

5.5.16.1 Motor adding or reducing

Motor adding

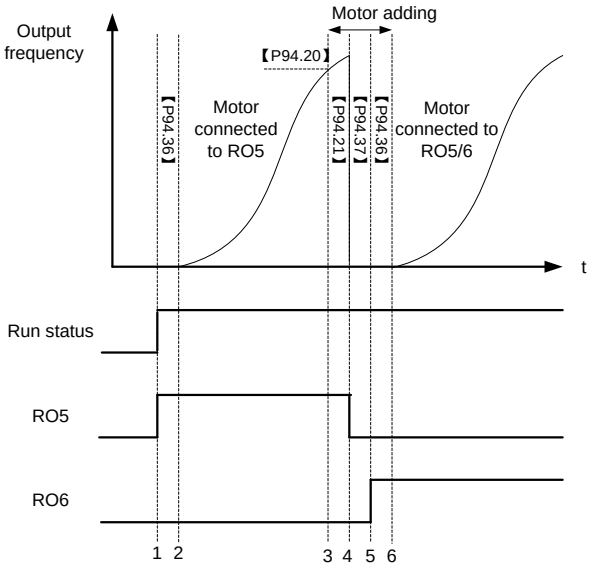

Figure 5-32 Motor adding timing

This figure assumes that the VFD outputs and controls motor M1 and the other motors are in the stopped state. At this time, if the output frequency is equal to or higher than P94.20 (Running frequency for motor adding), PID1 feedback is less than the difference between PID1 reference and P94.19 (Pressure tolerance for motor adding), and this condition lasts a period of time longer than P94.21 (Motor adding delay), the motor adding function is triggered. Motors are added, and then the VFD coasts to stop and disconnects the contactor KM1 with the contactor opening delay (P94.37) and closes the contactor KM3 with the contactor opening delay (P94.36) to ensure completed contactor closing. The following table lists the relay action logic in the motor adding process.

Table 5-3 Motor adding logic in circular variable-frequency motor run mode

RO5	RO6	RO7	RO8	Motor M1	Motor M2	Motor M3	Motor M4
0	0	0	0	Stop	Stop	Stop	Stop
1	0	0	0	Variable frequency	Stop	Stop	Stop
0	0	0	0	Stop	Stop	Stop	Stop
0	1	0	0	Stop	Variable frequency	Stop	Stop

RO5	RO6	RO7	RO8	Motor M1	Motor M2	Motor M3	Motor M4
1	1	0	0	Power frequency	Variable frequency	Stop	Stop
1	0	0	0	Power frequency	Stop	Stop	Stop
1	0	1	0	Power frequency	Stop	Variable frequency	Stop
1	1	1	0	Power frequency	Power frequency	Variable frequency	Stop
1	1	0	0	Power frequency	Power frequency	Stop	Stop
1	1	0	1	Power frequency	Power frequency	Stop	Variable frequency
1	1	1	1	Power frequency	Power frequency	Power frequency	Variable frequency

Motor reducing

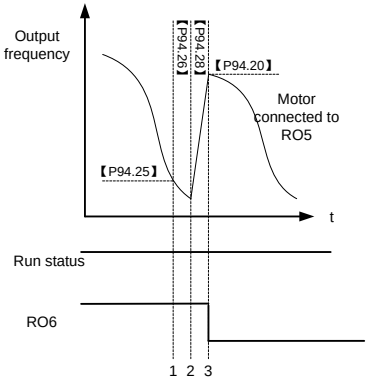

Figure 5-33 Motor reducing timing

This figure assumes that the VFD outputs and controls motor M2, M1 is in power-frequency run mode, and M3−M4 are in the stopped state. At this time, if the VFD output frequency is equal to or lower than P94.25 (Running frequency for motor reducing), PID1 feedback is less than the difference between PID1 reference and P94.24 (Pressure tolerance for motor reducing), and this condition lasts a period of time longer than P94.26 (Motor reducing delay), the motor reducing function is triggered. There are two motor reducing actions for selection, which can be set by P94.27 (Variable-frequency motor action for motor reducing).

When P94.27=1

The VFD improves the output frequency to P94.20 (Running frequency for motor adding) within the time specified by P94.28 (ACC time for motor reducing). When the ACC is completed, the VFD disconnects the relays corresponding to the motors in power-frequency run mode.

When P94.27=0

The VFD directly disconnects motor M1 in power-frequency run mode, and adjusts the frequency of motors in variable-frequency run mode through PID to reach the given water pressure.

The following table lists the relay action logic in the motor reducing process.

Table 5-4 Motor reducing logic in circular variable-frequency run mode

RO5	RO6	RO7	RO8	Motor M1	Motor M2	Motor M3	Motor M4
1	1	1	1	Power frequency	Power frequency	Variable frequency	Variable frequency
0	1	1	1	Stop	Power frequency	Power frequency	Variable frequency
0	0	1	1	Stop	Stop	Power frequency	Variable frequency
0	0	0	1	Stop	Stop	Stop	Variable frequency
0	0	0	0	Stop	Stop	Stop	Stop

Related function codes:

Function code	Name	Description	Default	Modify
P94.19	Pressure tolerance for motor adding	0.0–30.0% (relative to PID1 max. value)	5.0%	○
P94.20	Running frequency for motor adding	P94.25 (Running frequency for motor reducing)–P00.03	50.00Hz	○
P94.21	Motor adding delay	0.0–3600.0s	10.0s	○
P94.22	Switching frequency for variable-frequency motor adding	P00.05 (Lower limit frequency)–P00.03	50.00Hz	○
P94.23	Variable-frequency motor DEC time for power-frequency motor adding	0.0–300.0s	10.0s	○
P94.24	Pressure tolerance for motor reducing	0.0–30.0% (relative to PID1 max. value)	4.0%	○
P94.25	Running frequency for motor reducing	P00.05–P94.20 (Running frequency for motor adding)	5.00Hz	○
P94.26	Motor reducing delay	0.0–3600.0s	10.0s	○
P94.27	Variable-frequency motor action for motor reducing	0: Keep the frequency unchanged 1: Accelerate to the motor running frequency	1	○
P94.28	Variable-frequency	0.0–300.0s	10.0s	○

Function code	Name	Description	Default	Modify
	motor ACC time for motor reducing			

5.5.16.2 Polling function

Automatic polling

The VFD supports the automatic water pump polling function to achieve two goals: First, to keep the run time of each pump the same to balance the loss; Second, to prevent any pump from stopping for too long, which could lead to blocking.

When the initial motor running time exceeds P94.34 (Variable-frequency motor polling cycle) and the present frequency is higher than P94.35 (Polling running frequency threshold), the VFD starts automatic polling. It changes the objects of variable-frequency control objects by adding and reducing motors and then re-calculates the polling time.

Note: Polling time recalculation is also triggered by motor adding or reducing that occurs during normal PID adjustment.

Related parameter list:

Function code	Name	Description	Default	Modify
P94.34	Motor polling cycle	0.0–6000.0h Automatic polling is targeted at idle variable-frequency motors. The value 0 indicates no polling.	0.0h	○
P94.35	Running frequency threshold for polling	P00.05–P00.03 When the running frequency is greater than the value of this function code, variable-frequency motor polling is not performed. Otherwise, great water pressure change impacts water supply.	45.00Hz	○

Manual polling

Manual polling is used for testing to check whether the main circuit wiring and control circuit wiring are correct and motors can run properly. If polling is completed or terminated, a stop command must be given so that the next polling mode can be entered after restart.

The function is implemented as follows: When the VFD is in stopped stated, set the terminal input function to 85 (Manual polling), enable the terminal function, and then send a startup command. The VFD starts all connected motors from motor M1 in polling mode. During polling, all motors are started by means of adding motors in sequence. When all motors have been started, motors are automatically reduced in sequence until the end.

Note: During polling, if the enabling signal of an S terminal is canceled, the polling persists until the end. If you want to terminate the polling, you need to trigger a stop signal.

5.5.16.3 Water pump maintenance

You can set the S digital input terminal functions to 104–107 to lock motors M1–M4, which will not be under multi-pump control. You only need to disconnect the motor wiring

contactors from the grid to maintain the pumps, without adjusting the onsite wiring.

5.5.16.4 Smooth switchover

When a motor switches from the variable-frequency run mode to the power-frequency run mode, the water pressure fluctuates greatly. You can set P94.22 (Switching frequency for variable-frequency motor adding) to enable the motor runs from a high switching frequency to the power-frequency run mode, preventing the water pressure from dropping too quick so as to ensure water pressure steady.

Related function codes:

Function code	Name	Description	Default	Modify
P94.22	Switching frequency for variable-frequency motor adding	P00.05 (Lower limit frequency)–P00.03	50.00Hz	○

5.5.16.5 Fixed variable-frequency run mode

The fixed variable-frequency control logic is relatively simple. The following assumes one VFD drives four motors in fixed variable-frequency run mode. Se the following parameters.

1. Enable the multi-pump control function (P94.00=1).

2. Set the variable-frequency motor run mode to fixed (P94.10=0).

3. Set the motor quantity to 4 (P94.11=4).

4. Set RO5–RO8 to control motors A, B, C, and D respectively (set P26.06–P26.09 to 57–60 respectively).

5. Set the contactor closing delay, which is the interval of switchover between the variable-frequency run mode and power-frequency run mode.

The following figures and tables show the control logic.

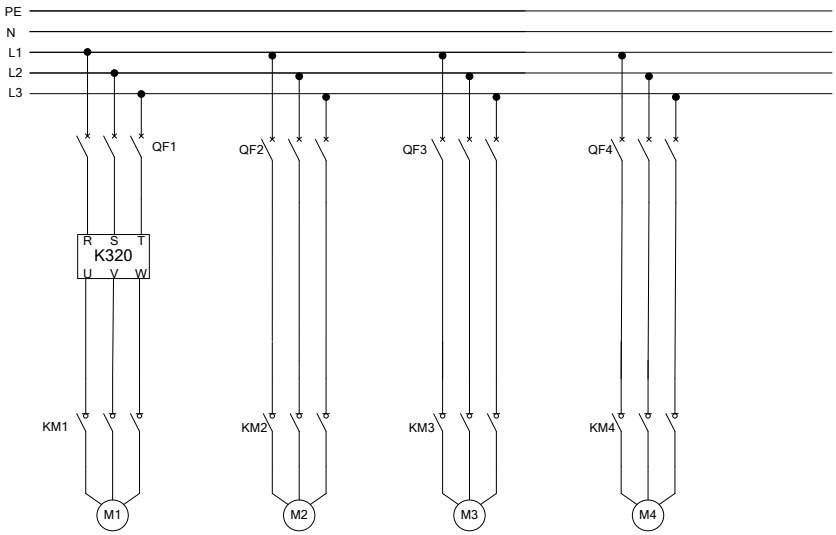

KM1–KM4: Contactors QF1–QF4: Low-voltage breakers
M1–M4: Asynchronous motors

Figure 5-34 Main circuit wiring in fixed variable-frequency run mode

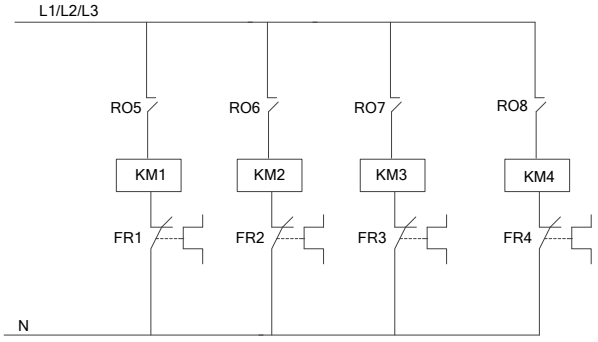

Figure 5-35 Control circuit wiring in fixed variable-frequency run mode

Table 5-5 Motor adding logic in fixed variable-frequency run mode

RO5	RO6	RO7	RO8	Motor M1	Motor M2	Motor M3	Motor M4
0	0	0	0	Stop	Stop	Stop	Stop
1	0	0	0	Variable frequency	Stop	Stop	Stop
1	1	0	0	Variable frequency	Power frequency	Stop	Stop
1	1	1	0	Variable frequency	Power frequency	Power frequency	Stop
1	1	1	1	Variable frequency	Power frequency	Power frequency	Power frequency

Table 5-6 Motor reducing logic in fixed variable-frequency run mode

RO5	RO6	RO7	RO8	Motor M1	Motor M2	Motor M3	Motor M4
1	1	1	1	Variable frequency	Power frequency	Power frequency	Power frequency
1	1	1	0	Variable frequency	Power frequency	Power frequency	Stop
1	1	0	0	Variable frequency	Power frequency	Stop	Stop
1	0	0	0	Variable frequency	Stop	Stop	Stop
0	0	0	0	Stop	Stop	Stop	Stop

5.5.17 PID function only for water supply

The VFD provides two groups of PID only for water supply, only by which HVAC related PID setting can be implemented. The following takes PID1 as an example to describe the function.

The unit of PID1 reference and PID1 feedback can be specified by P90.00. PID source 1 (P90.06 and P90.08, that is, PID reference and feedback) can be set for PID1, and PID source 2 (P90.11 and P90.13, that is, PID reference and feedback) can be set for PID2. P90.16 is the combination method of PID source1 and source 2.

PID1 reference and PID1 feedback can be set to the actual water pressure values but not a percentage. P90.01 can specify the number of decimal places of PID1 reference and PID1 feedback. P90.02 can specify the actual water pressure corresponding to 100% of PID1 reference. P90.03 and P90.04 can specify the upper limit and lower limit of PID1 reference. In most cases, P90.02 and P90.03 are set to the same value. P89.09 and P89.10 can be used to view the percentage of PID1 reference and PID1 feedback.

Note: PID2 differs from PID1 because PID2 cannot participate in the running frequency regulation. You can only convert PID2 output to analog signal by setting the AO function (setting 32). For details about related function codes, see function code groups P90 and P91.

5.5.18 Segmented water pressure

After the clock function is enabled, you can set working days through P92.04 and set start time and stop time of working days through P92.05–P92.08. P95 can specify water pressure by time segment. Within a specific time segment, the PID reference source is switched to the water pressure corresponding to the time segment.

Note: To use this function, you need to purchase the option part—LCD keypad (model: SOP-270) and prepare the button battery. For details about related function codes, see function code group P92.

5.5.19 Automatic sleep

Function code P94.01 specifies the sleep method. When the condition specified by P94.02 or P94.03 and the condition lasts the time specified by P94.04, the PID increases by P94.05 (PID boost value for sleep) with a duration specified by P94.06 (PID boost time), and the VFD enters the sleep state. When P94.08 (Wakeup condition) is met and this condition lasts the time specified by P94.09 (Wakeup time), the VFD automatically wakes up from sleep and directly runs at the frequency specified by P94.07, and the frequency is PID regulated later.

Related parameter list:

Function code	Name	Description	Default	Modify
P94.00	HVAC function selection	0: Invalid 1: Valid	0	◎
P94.01	Sleep method selection	0: Run at the frequency lower limit 1: Sleep based on running frequency 2: Sleep based on deviation	0	○
P94.02	Sleep starting frequency	P00.05–P00.04 (Upper limit frequency) When the running frequency is less than or equal to the value and this situation lasts the time longer than P94.04, sleep is allowed.	5.00Hz	○
P94.03	Sleep starting deviation	0.0–30.0% (relative to PID1 max. value) When output is positive, if the feedback is greater than the reference, sleep is allowed only when the absolute difference is greater than the value of this function code and the situation lasts the time longer than P94.04. When output is negative, if the feedback is less than the reference, sleep is allowed only when the absolute difference is greater than the value of this function code and this situation lasts the time longer than P94.04.	5.0%	○
P94.04	Sleep delay	0.0–3600.0s	60.0s	○

Function code	Name	Description	Default	Modify
P94.05	PID1 reference boost value	-100.0–100.0% (relative to PID1 reference value)	10.0%	○
P94.06	Longest boost time	0.000–6000.0s This function is used for continuous VFD running when the running frequency reaches the upper limit frequency but the feedback value cannot reach the setting after boost. In this situation, the VFD enters the sleep mode at once after the boost time.	10.0s	○
P94.07	Wake-up-from-sleep frequency	P00.05–P00.04 (Upper limit frequency) In closed-loop PID, the PID output is superimposed directly from the corresponding value of this frequency when the VFD is woken up.	5.00Hz	○
P94.08	Wake-up-from-sleep deviation	0.0–30.0% (relative to PID1 max. value) In closed-loop PID, when output is positive, if the feedback is less than the reference, wakeup is allowed only when the actual difference is greater than the value of this function code and this situation lasts the time longer than P94.09. When output is negative, if the feedback is greater than the reference, wakeup is allowed only when the actual difference is greater than the value of this function code and this situation lasts the time longer than P94.09.	5.0%	○
P94.09	Wake-up-from-sleep delay	0.0–3600.0s Min. sleep time.	5.0s	○

5.5.20 Pump cleaning

The VFD supports water pump cleaning, which is shown in the following figure. The motor runs forward for certain time, it runs reversely for certain time after a period of stop, and then it runs forward forward after a period of stop. The motor repeats the procedure circularly.

Similar to manual polling, the pump cleaning function can be triggered only when the VFD is in stopped state. To enable the pump cleaning function, set the terminal function to 86, enable the terminal, and send a startup signal.

After the pump cleaning function is enabled, all water pumps are cleared in order. Then the VFD automatically stops. During pump cleaning, you can terminate the pump cleaning by sending a stop command. If you want to restart pump cleaning after pump cleaning is completed or terminated, you need to send a stop command.

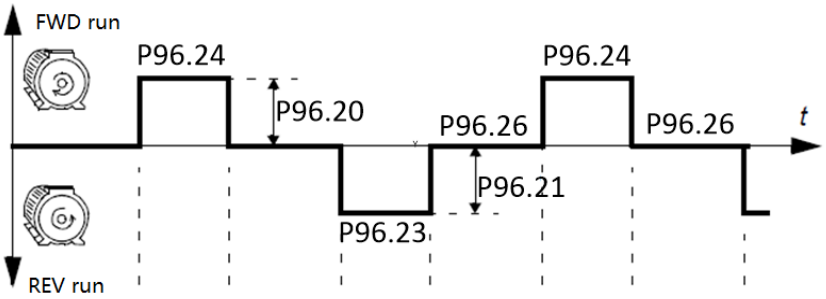

Figure 5-36 Pump cleaning logic

Related parameter list:

Function code	Name	Description	Default	Modify
P96.20	Forward run frequency for pump cleaning	P00.05–P00.03	50Hz	◎
P96.21	Reverse run frequency for pump cleaning	P00.05–P00.03	30Hz	◎
P96.22	Forward run ACC time for pump cleaning	0–3600.0s	10.0s	○
P96.23	Reverse run ACC time for pump cleaning	0–3600.0s	10.0s	○
P96.24	Forward run duration for pump cleaning	1.0s–1000.0s	5.0s	○
P96.25	Reverse run duration for pump cleaning	1.0s–1000.0s	5.0s	○
P96.26	Forward/reverse run interval for pump cleaning	1.0s–1000.0s	1.0s	○
P96.27	Forward/reverse run cycles for pump cleaning	1–100	1	◎

5.5.21 Water pipe break detection

This function can detect water pipe break and stop pump motors in time to reduce the loss. This function is implemented as follows:

You can set P96.00 to 1 to enable this function. If water pipe break occurs and the water pressure cannot reach the setting, the VFD running frequency boosts up to the upper limit or the PID output upper limit frequency. You can determine the situation by setting P96.01. When the condition reaches the time specified by P96.02, the VFD stops the motor.

Related parameter list:

Function code	Name	Description	Default	Modify
P96.00	Action upon water pipe break	0: Normal running 1: Stop	0	○
P96.01	Detection level of water pipe break	After water pipe break, the VFD running frequency boosts up to the upper limit or the PID output upper limit frequency. When it is set to 0, the water pipe break function is invalid. Range: 0.0–100.0%	10.0%	○
P96.02	Detection time of water pipe break	Used to check the detection time of water pipe break. Range: 0.0–6000.0s	120.0s	○

5.5.22 Water pipe soft padding

In a water supply system, the rapid influx of water into the empty water pipe can cause a water hammer effect, which damages the water pipe or valve. After water pipe soft padding is enabled, the VFD implements water injection into the water pipe slowly and steadily for every startup, avoiding the water hammer effect. If the VFD stops due to a fault during water injection, the VFD still runs the function setting after restart. This function is implemented as follows: Set P96.03 to 1 to enable soft padding. After the VFD is started, the VFD exits from the soft padding process when the motor reaches any of the two conditions, and the PID takes over the frequency control:

Condition 1: The VFD runs at the frequency specified by P96.04, and the run time reaches the time specified by P96.05.

Condition 2: The PID feedback value reaches the value specified by P96.06 (Soft padding cutoff detection level).

Related parameter list:

Function code	Name	Description	Default	Modify
P96.03	Water pipe soft padding function	0: Disable 1: Enable	0	○
P96.04	Reference frequency for soft padding	0.00–P00.03	30.00Hz	○
P96.05	Duration of reference frequency for soft padding	0.0–6000.0s	10.0s	○
P96.06	Soft padding cutoff detection level	The PID function is valid when the feedback value is greater than the value of this parameter. Range: 0.0–100.0%	30.0%	○

5.5.23 Freezing protection

At low temperature, water freezing in the water tube damages the water pump. After protection against freezing is enabled, the motor automatically rotates to prevent against water freezing when the ambient temperature reaches a specified value. The VFD provides the AI/AO temperature measuring function, which supports PT100, PT1000, and KTY84. During use, select current output for AO, connect one end of the temperature resistor to AI1 and AO1 and the other end to GND. P89.32 indicates the display temperature. If the full range is exceeded, the temperature is displayed as 0.

When you have set P96.10 to enable protection against freezing, if P89.32 (Measured temperature) is lower than P96.12 (Freezing protection threshold), the freezing protection signal is activated, and the VFD runs at P96.14 (Freezing protection frequency). If the VFD is running, the signal is ignored. If a run command is received after the protection has been activated, the protection is terminated and the run command is executed. If a stop command is received after the protection has been activated, the motor is stopped and automatic protection is disabled. Automatic protection can be enabled only when the temperature is higher than the protection threshold.

Function code	Name	Description	Default	Modify
P89.32	AI/AO measured temperature	-20.0–200.0°C	0	●
P96.10	Enabling freezing protection	Protection against freezing: 0: Disable. 1: Enable	0	○
P96.11	Temperature sensor type	0: Invalid 1: PT100 2: PT1000 3: KTY84	0	○
P96.12	Freezing protection threshold	-20.0°C–20.0°C	-5.0°C	○
P96.13	Low-temperature pre-alarm threshold	-20.0°C–20.0°C When the temperature is lower than the value of this function code, the pre-alarm terminal outputs a signal.	0.0°C	○
P96.14	Freezing protection frequency	0.0–P00.04	0.0Hz	○

Related parameter list:

Fault code	Fault type	Possible cause	Solution
FrOST	Freezing fault	The temperature is lower than the freezing protection threshold.	Check the temperature.

5.5.24 Condensation protection

When motors are in wet or cold environments, condensation can cause faults to the motors. This risk can be eliminated by simply increasing the surface temperature of the motor during the work interval. When the external condensation sensor detects intensive condensation, the VFD injects DC current into the motor to raise the motor surface temperature to prevent condensation.

To implement the function: Set the S digital input terminal function to 91 to enable condensation protection. If this terminal is enabled through external signal, the VFD sends DC current and automatically stops the sending 40s later. If this function needs to be triggered again, re-enable this function terminal. You can set P96.15 to adjust the DC current proportion.

Related parameter list:

Function code	Name	Description	Default	Modify
P96.15	Current of triggering condensation protection	0.0–100.0%	30.0%	○

6 Function parameter list

6.1 What this chapter contains

This chapter lists all the function codes and corresponding description of each function code.

6.2 Function parameter list

The function parameters of the VFD are divided into groups by function. Among the function parameter groups, the P98 group is the analog input and output calibration group, while the P99 group contains the factory function parameters, which are user inaccessible. Each group includes several function codes (each function code identifies a function parameter). A three-level menu style is applied to function codes. For example, "P08.08" indicates the 8th function code in the P08 group.

The function group numbers correspond to the level-1 menus, the function codes correspond to the level-2 menus, and the function parameters correspond to the level-3 menus.

1.The content of the function code table is as follows:

Column 1 "Function code": Code of the function group and parameter

Column 2 "Name": Full name of the function parameter

Column 3 "Description": Detailed description of the function parameter

Column 4 "Default": Initial value set in factory

Column 5 "Modify": Whether the function parameter can be modified, and conditions for the modification

"○" indicates that the value of the parameter can be modified when the VFD is in stopped or running state.

"◎" indicates that the value of the parameter cannot be modified when the VFD is in running state.

"●" indicates that the value of the parameter is detected and recorded, and cannot be modified.

(The VFD automatically checks and constrains the modification of parameters, which helps prevent incorrect modifications.)

2.The parameters adopt the decimal system (DEC). If the hexadecimal system is adopted, all bits are mutually independent on data during parameter editing, and the setting ranges at some bits can be hexadecimal (0–F).

3."Default" indicates the factory setting of the function parameter. If the value of the parameter is detected or recorded, the value cannot be restored to the factory setting.

4.To better protect parameters, the VFD provides the password protection function. After a password is set (that is, P07.00 is set to a non-zero value), "0.0.0.0.0" is displayed when you press the PRG/ESC key to enter the function code editing interface. You need to enter the correct user password to enter the interface. For the factory parameters, you need to enter the correct factory password to enter the interface. (You are not advised to modify the factory parameters. Incorrect parameter setting may cause operation exceptions or even damage to the VFD.) If password protection is not in locked state, you can change the password any time.

You can set P07.00 to 0 to cancel the user password. When P07.00 is set to a non-zero value during power-on, parameters are prevented from being modified by using the user password function. When you modify function parameters through serial communication, the user password protection function is also applicable and compliant with the same rule.

P00 group—Basic functions

Function code	Name	Description	Default	Modify
P00.00	Speed control mode	0: Sensorless vector control (SVC) mode 0 1: Sensorless vector control (SVC) mode 1 2: Space voltage vector control mode **Note:** Before using a vector control mode (0 or 1), enable the VFD to perform motor parameter autotuning first.	2	◎
P00.01	Channel of running commands	0: Keypad 1: Terminal 2: Communication	0	○
P00.02	Communication mode of running commands	0: Modbus 1: PROFIBUS/CANopen communication 2: Ethernet 3: PROFINET 4: Reserved 5: Wireless communication card **Note:** The options 1, 2, 3, 4, and 5 are add-on functions and are available only when corresponding expansion cards are configured.	0	○
P00.03	Max. output frequency	Used to set the max. output frequency of the VFD. Pay attention to the function code because it is the foundation of the frequency setting and the speed of acceleration (ACC) and deceleration (DEC). Setting range: Max (P00.04, 10.00)–400.00Hz	50.00Hz	◎
P00.04	Upper limit of running frequency	The upper limit of the running frequency is the upper limit of the output frequency of the VFD, which is lower than or equal to the max. output frequency. When the set frequency is higher than the upper limit of the running frequency, the upper limit of the running frequency is used for running. Setting range: P00.05–P00.03 (Max. output frequency)	50.00Hz	◎
P00.05	Lower limit of running frequency	The lower limit of the running frequency is the lower limit of the output frequency of the VFD, When the set frequency is lower than the lower limit of the running frequency, the	0.00Hz	◎

Function code	Name	Description	Default	Modify
		lower limit of the running frequency is used for running. **Note:** Max. output frequency ≥ Upper limit of frequency ≥ Lower limit of frequency Setting range: 0.00Hz–P00.04 (Upper limit of running frequency)		
P00.06	Setting channel of A frequency command	0: Keypad 1: AI1 2: AI2 3: AI3 4: High-speed pulse HDIA 5: Simple PLC program 6: Multi-step speed running 7: PID control 8: Modbus communication 9: PROFIBUS/CANopen communication 10: Ethernet communication 11: Reserved 12: Reserved 13: PROFINET communication 14–17: Reserved 18: Keypad (for 1.5–22kW models)	0	○
P00.07	Setting channel of B frequency command		15	○
P00.08	Reference object of B frequency command	0: Max. output frequency 1: A frequency command	0	○
P00.09	Combination mode of setting source	0: A 1: B 2: (A+B) 3: (A-B) 4: Max(A, B) 5: Min(A, B)	0	○
P00.10	Frequency set through keypad	When A and B frequency commands select the keypad for setting, the value of the function code is the original setting one of the frequency data of the VFD. Setting range: 0.00 Hz–P00.03 (Max. output frequency)	50.00Hz	○
P00.11	ACC time 1	ACC time means the time needed if the VFD speeds up from 0Hz to the max. output frequency (P00.03). DEC time means the time needed if the VFD speeds down from the max. output frequency (P00.03) to 0Hz. The VFD has four groups of ACC/DEC time, which can be selected by P05. The factory	Depends on model	○
P00.12	DEC time 1		Depends on model	○

<table>
<tr><th>Function code</th><th>Name</th><th>Description</th><th>Default</th><th>Modify</th></tr>
<tr><td></td><td></td><td>default ACC/DEC time of the VFD is the first group.
P00.11 and P00.12 setting range: 0.0-3600.0s</td><td></td><td></td></tr>
<tr><td>P00.13</td><td>Running direction</td><td>0: Run at the default direction.
1: Run at the opposite direction.
2: Disable reverse running</td><td>0</td><td>○</td></tr>
<tr><td>P00.14</td><td>Carrier frequency</td><td>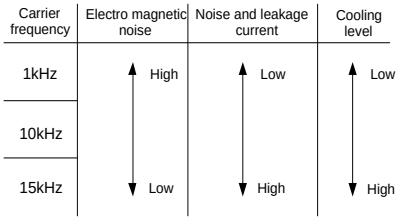

The relationship between models and carrier frequencies is as follows:
<table>
<tr><th colspan="2">Model</th><th>Default carrier frequency</th></tr>
<tr><td rowspan="2">380V</td><td>1.5–11kW</td><td>4kHz</td></tr>
<tr><td>≥15kW</td><td>2kHz</td></tr>
</table>
Advantage of high carrier frequency: ideal current waveform, little current harmonic wave and motor noise.
Disadvantage of high carrier frequency: increasing the switch loss, increasing VFD temperature and the impact to the output capacity. The VFD needs to derate on high carrier frequency. At the same time, the leakage and electrical magnetic interference will increase.
On the contrary, an extremely-low a carrier frequency may cause unstable operation at low frequency, decrease the torque, or even lead to oscillation.
The carrier frequency has been properly set in the factory before the VFD is delivered. In general, you do not need to modify it.
When the frequency used exceeds the default carrier frequency, the VFD needs to derate by 10% for each increase of 1k carrier frequency.
Setting range: 1.0–15.0kHz</td><td>Depends on model</td><td>○</td></tr>
<tr><td>P00.15</td><td>Motor parameter autotuning</td><td>0: No operation
1: Dynamic autotuning 1; comprehensive motor parameter autotuning. It is recommended to use rotating autotuning</td><td>0</td><td>◎</td></tr>
</table>

Function code	Name	Description	Default	Modify
		when high control accuracy is required. 2: Complete parameter static autotuning; complete parameter static autotuning is used in cases where the motor cannot be disconnected from load. 3: Partial parameter static autotuning 1; when the present motor is motor 1, only P02.06, P02.07, and P02.08 are autotuned; when the present motor is motor 2, only P12.06, P12.07, and P12.08 are autotuned. 4: Dynamic autotuning 2, which is similar to rotary autotuning 1 but only valid for AMs 5: Partial parameter static autotuning 2, which is valid only for AMs.		
P00.16	AVR function selection	0: Invalid 1: Valid during the whole procedure The auto-adjusting function of the VFD can eliminate the impact on the output voltage of the VFD because of the bus voltage fluctuation.	1	○
P00.17	Reserved	-	-	-
P00.18	Function parameter restore	0: No operation 1: Restore default values 2: Clear fault records 3: Lock keypad parameters 4–6: Reserved **Note:** After the selected operation is performed, the function code is automatically restored to 0. Restoring the default values may delete the user password. Exercise caution when using this function.	0	◎

P01 group—Start and stop control

Function code	Name	Description	Default	Modify
P01.00	Start mode	0: Direct start 1: Start after DC braking 2: Speed tracking restart 1 (not supported in SVC 0 for AMs) **Note:** For AMs, speed tracking is not supported in SVC 0, and software speed tracking is supported in other modes. For	0	◎

Function code	Name	Description	Default	Modify
		details, see parameters P01.35–P01.41. For AMs, you do not need to modify parameters P01.35–P01.41.		
P01.01	Starting frequency of direct start	The function code indicates the initial frequency during VFD start. See P01.02 (Starting frequency hold time) for detailed information. Setting range: 0.00–50.00Hz	0.50Hz	◎
P01.02	Starting frequency hold time	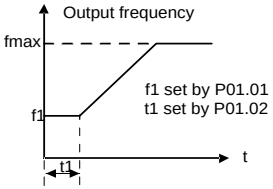 Setting a proper starting frequency can increase the torque during VFD start. During the hold time of the starting frequency, the output frequency of the VFD is the starting frequency. And then, the VFD runs from the starting frequency to the set frequency. If the set frequency is lower than the starting frequency, the VFD stops running and keeps in the standby state. The starting frequency is not limited in the lower limit frequency. Setting range: 0.0–50.0s	0.0s	◎
P01.03	Braking current before start	The VFD performs DC braking with the braking current before start and it speeds up after the DC braking time. If the set DC braking time is 0, DC braking is invalid. Stronger braking current indicates larger braking power. The DC braking current before start is a percentage of the VFD rated current. P01.03 setting range: 0.0–100.0% P01.04 setting range: 0.00–50.00s	0.0%	◎
P01.04	Braking time before start		0.00s	◎
P01.05	ACC/DEC mode	Used to indicate the changing mode of the frequency during start and running. 0: Linear type. The output frequency increases or decreases linearly.	0	◎

Function code	Name	Description	Default	Modify
		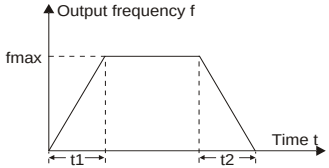 1: S curve. The output frequency increases or decreases according to the S curve. The S curve is generally applied to elevators, conveyors, and other application scenarios where smoother start or stop is required. 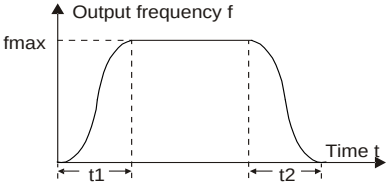 **Note:** If mode 1 is selected, set P01.06, P01.07, P01.27, and P01.28 accordingly.		
P01.06	Time of starting segment of ACC S curve	The curvature of S curve is determined by the ACC range and ACC/DEC time. 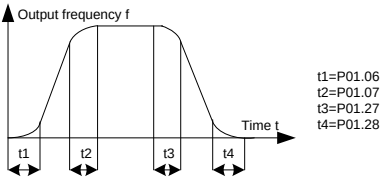 Setting range: 0.0–50.0s	0.1s	◎
P01.07	Time of ending segment of ACC S curve		0.1s	◎
P01.08	Stop mode	0: Decelerate to stop. After a stop command takes effect, the VFD lowers output frequency based on the DEC mode and the defined DEC time; after the frequency drops to the stop speed (P01.15), the VFD stops. 1: Coast to stop. After a stop command takes effect, the VFD stops output immediately; and the load coasts to stop according to mechanical inertia.	0	○
P01.09	Starting frequency of DC braking for stop	Starting frequency of DC braking for stop: During the deceleration to stop, the VFD starts DC braking for stop when running frequency reaches the starting frequency	0.00Hz	○

Function code	Name	Description	Default	Modify
P01.10	Demagnetization time	determined by P01.09. Wait time before DC braking: The VFD blocks the output before starting DC braking. After this wait time, DC braking is started so as to prevent overcurrent caused by DC braking at high speed. DC braking current for stop: It indicates the applied DC braking energy. Stronger current indicates greater DC braking effect. DC braking time for stop: It indicates the hold time of DC braking. If the time is 0, DC braking is invalid, and the VFD decelerates to stop within the specified time.	0.00s	○
P01.11	DC braking current for stop		0.0%	○
P01.12	DC braking time for stop	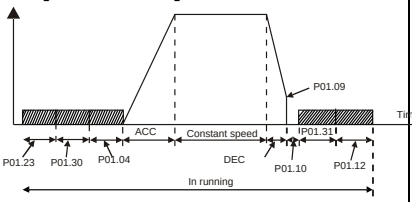 P01.09 setting range: 0.00Hz–P00.03 (Max. output frequency) P01.10 setting range: 0.00–30.00s P01.11 setting range: 0.0–100.0% P01.12 setting range: 0.0–50.0s	0.00s	○
P01.13	FWD/REV running deadzone time	This function code indicates the transition time specified in P01.14 during FWD/REV rotation switching. See the following figure: 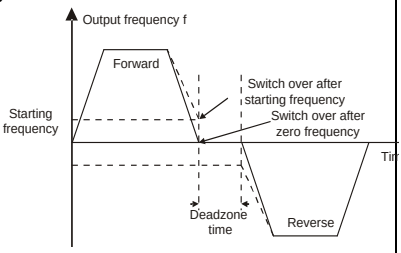 Setting range: 0.0–3600.0s	0.0s	○
P01.14	FWD/REV running switching mode	0: Switch at zero frequency 1: Switch at the starting frequency 2: Switch after the speed reaches the stop speed with a delay	1	◎
P01.15	Stop speed	0.00–100.00Hz	0.50Hz	◎
P01.16	Stop speed	0: Detect by the set speed (unique in space	0	◎

Function code	Name	Description	Default	Modify
	detection mode	voltage vector control mode) 1: Detect by the feedback speed		
P01.17	Stop speed detection time	0.00–100.00s	0.50s	◎
P01.18	Terminal-based running command protection at power-on	When the channel of running commands is terminal control, the system detects the state of the running terminal during power-on. 0: The terminal running command is invalid at power-on. Even the running command is considered as valid during power-on, the VFD does not run and it keeps the protection state until the running command is canceled and enabled again. 1: The terminal running command is valid at power-on. If the running command is considered as valid during power-on, the VFD is started automatically after the initialization. **Note:** Exercise caution before using this function. Otherwise, serious result may follow.	0	○
P01.19	Action selected when running frequency less than frequency lower limit (valid when frequency lower limit greater than 0)	The function code determines the running state of the VFD when the set frequency is lower than the lower-limit one. 0: Run at the frequency lower limit 1: Stop 2: Sleep The VFD coasts to stop when the set frequency is lower than the lower-limit one. If the set frequency exceeds the lower limit one again and it lasts for the time set by P01.20, the VFD resumes the running state automatically.	0	◎
P01.20	Wake-up-from-sleep delay	Used to set the wake-up-from-sleep delay time. When the running frequency of the VFD is lower than the lower limit, the VFD becomes standby. When the set frequency exceeds the lower limit one again and it lasts for the time set by P01.20, the VFD runs automatically.	0.0s	○

Function code	Name	Description	Default	Modify
		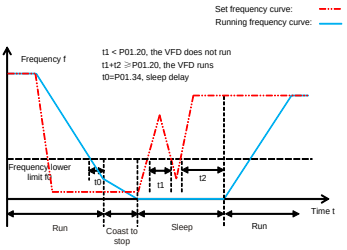 Setting range: 0.0–3600.0s (Valid only when P01.19=2)		
P01.21	Power-off restart selection	The function code indicates whether the VFD automatically runs after re-power on. 0: Disable 1: Enable. If the restart condition is met, the VFD will run automatically after waiting the time defined by P01.22.	0	○
P01.22	Wait time for restart after power-off	The function code indicates the wait time before the automatic running of the VFD that is re-powered on. 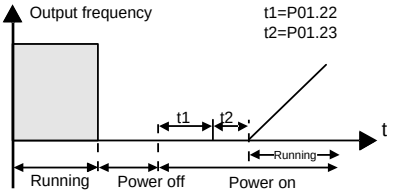 Setting range: 0.0–3600.0s (Valid only when P01.21=1)	1.0s	○
P01.23	Start delay	After a VFD running command is given, the VFD is in standby state and restarts with the delay defined by P01.23 to implement brake release. Setting range: 0.0–600.0s	0.0s	○
P01.24	Stop speed delay	0.0–600.0s	0.0s	○
P01.25	Open-loop 0Hz output selection	0: Output without voltage 1: Output with voltage 2: Output with the DC braking current for stop	0	○
P01.26	DEC time for emergency stop	0.0–60.0s	2.0s	○
P01.27	Time of starting segment of DEC S curve	0.0–50.0s	0.1s	◎

Function code	Name	Description	Default	Modify
P01.28	Time of ending segment of DEC S curve	0.0–50.0s	0.1s	◎
P01.29	Short-circuit braking current	When the VFD starts in direct start mode (P01.00=0), set P01.30 to a non-zero value to enter short-circuit braking. During stop, if the running frequency of VFD is lower than the starting frequency of brake for stop (P01.09), set P01.31 to a non-zero value to enter short-circuit braking for stop, and then carry out DC braking in the time set by P01.12. (See descriptions for P01.09–P01.12.) P01.29 setting range: 0.0–150.0% (VFD) P01.30 setting range: 0.0–50.0s P01.31 setting range: 0.0–50.0s	0.0%	○
P01.30	Hold time of short-circuit braking for start		0.00s	○
P01.31	Hold time of short-circuit braking for stop		0.00s	○
P01.32	Pre-exciting time for jogging	0.000–10.000s	0.300s	○
P01.33	Starting frequency of braking for stop in jogging	0.00–P00.03	0.00Hz	○
P01.34	Sleep delay	0.0–3600.0s	0.0s	○
P01.35	Speed tracking method	Speed tracking method 0: From stop frequency (Usually selected) 1: From low frequency (Applicable to restart after a long time of stop) 2: From max. frequency P00.03 (Applicable to common power generation load situation)	0	○
P01.36	Quick/slow selection for speed tracking	1–100 A great value of this parameter indicates a fast rotation-speed tracking speed, but an excessively great value may result in poor tracking effect.	15	○
P01.37	Speed tracking current	30%–200% (motor) Great great value of this parameter indicates high reliability of rotation-speed tracking, but an excessively great value may result in VFD overcurrent.	100%	○
P01.38	Demagnetization time for speed tracking	0.0–10.0s	Depends on model	○
P01.39	Advanced control for speed tracking	0x000–0x111 LED ones place: Current giving mode in vector control 0: 120% of current is given during startup,	0x110	○

Function code	Name	Description	Default	Modify
		which is switched to the given value based on P01.35 1: The current is given based on P01.35 LED ones place: PWM mode selection 0: 2PH modulation mode 1: Based on P08.40 LED hundreds place: Search direction for speed tracking 0: Allow both forward and reverse search 1: Disallow reverse search		
P01.40	KP regulation coefficient for speed tracking	0–3000	1500	○
P01.41	KI regulation coefficient for speed tracking	0–3000	1500	○

P02 group—Parameters of motor 1

Function code	Name	Description	Default	Modify
P02.00	Type of motor 1	0: Asynchronous motor (AM) 1: Synchronous motor (SM)	0	◎
P02.01	Rated power of AM 1	0.1–3000.0kW	Depends on model	◎
P02.02	Rated frequency of AM 1	0.01Hz–P00.03(Max. output frequency)	50.00Hz	◎
P02.03	Rated speed of AM 1	1–60000rpm	Depends on model	◎
P02.04	Rated voltage of AM 1	0–1200V	Depends on model	◎
P02.05	Rated current of AM 1	0.8–6000.0A	Depends on model	◎
P02.06	Stator resistance of AM 1	0.001–65.535Ω	Depends on model	○
P02.07	Rotor resistance of AM 1	0.001–65.535Ω	Depends on model	○
P02.08	Leakage inductance of AM 1	0.1–6553.5mH	Depends on model	○
P02.09	Mutual inductance of AM 1	0.1–6553.5mH	Depends on model	○
P02.10	No-load current of AM 1	0.1–6553.5A	Depends on model	○

Function code	Name	Description	Default	Modify
P02.11	Magnetic saturation coefficient 1 of iron core of AM 1	0.0–100.0%	80.0%	○
P02.12	Magnetic saturation coefficient 2 of iron core of AM 1	0.0–100.0%	68.0%	○
P02.13	Magnetic saturation coefficient 3 of iron core of AM 1	0.0–100.0%	57.0%	○
P02.14	Magnetic saturation coefficient 4 of iron core of AM 1	0.0–100.0%	40.0%	○
P02.15	Rated power of SM 1	0.1–3000.0kW	Depends on model	◎
P02.16	Rated frequency of SM 1	0.01Hz–P00.03(Max. output frequency)	50.00Hz	◎
P02.17	Number of pole pairs of SM 1	1–128	2	◎
P02.18	Rated voltage of SM 1	0–1200V	Depends on model	◎
P02.19	Rated current of SM 1	0.8–6000.0A	Depends on model	◎
P02.20	Stator resistance of SM 1	0.001–65.535Ω	Depends on model	○
P02.21	Direct-axis inductance of SM 1	0.01–655.35mH	Depends on model	○
P02.22	Quadrature-axis inductance of SM 1	0.01–655.35mH	Depends on model	○
P02.23	Counter-emf of SM 1	0–10000	300	○
P02.24	Reserved	-	-	-
P02.25	Reserved	-	-	-
P02.26	Overload protection of motor 1	0: No protection 1: Common motor protection (with low-speed compensation). As the cooling effect of a common motor is degraded at low speed running, the corresponding electronic thermal protection value needs to be adjusted properly, the low compensation indicates lowering the	2	◎

Function code	Name	Description	Default	Modify
		overload protection threshold of the motor whose running frequency is lower than 30Hz. 2: Variable-frequency motor protection (without low speed compensation). Because the heat dissipation function for a variable-frequency motor is not impacted by the rotation speed, it is not necessary to adjust the protection value at low speed running.		
P02.27	Overload protection coefficient of motor 1	Motor overload multiples M=Iout/(In*K) In is rated motor current, Iout is VFD output current, K is motor overload protection coefficient. A smaller value of "K" indicates a bigger value of "M". When M=116%, protection is performed after motor overload last for 1 hour; when M=150%, protection is performed after motor overload lasts for 12 minutes; when M=180%, protection is performed after motor overload lasts for 5 minutes; when M=200%, protection is performed after motor overload lasts for 60 seconds; and when M≥ 400%, protection is performed immediately. 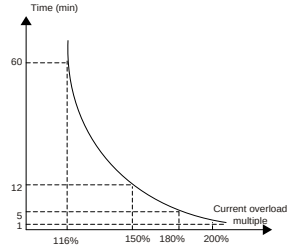 Setting range: 20.0%–150.0%	100.0%	○
P02.28	Power display calibration coefficient of motor 1	The function code can be used to adjust the power display value of motor 1. However, it does not affect the control performance of the VFD. Setting range: 0.00–3.00	1.00	○
P02.29	Parameter display of motor 1	0: Display by motor type. In this mode, only parameters related to the present motor type are displayed. 1: Display all. In this mode, all the motor parameters are displayed.	0	○

Function code	Name	Description	Default	Modify
P02.30	System inertia of motor 1	0–30.000kgm^2	0	○

P03 group—Vector control of motor 1

Function code	Name	Description	Default	Modify
P03.00	Speed-loop proportional gain 1	The parameters P03.00–P03.05 are applicable only to vector control mode. Below the switching frequency 1 (P03.02), the speed-loop PI parameters are: P03.00 and P03.01. Above the switching frequency 2 (P03.05), the speed-loop PI parameters are: P03.03 and P03.04. PI parameters are obtained according to the linear change of two groups of parameters. See the following figure: 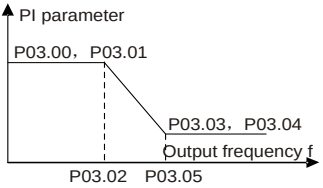 The speed loop dynamic response characteristics of vector control can be adjusted by setting the proportional coefficient and integral time of speed regulator. Increasing proportional gain or reducing integral time can accelerate dynamic response of speed loop; however, if the proportional gain is too large or integral time is too small, system oscillation and overshoot may occur; if proportional gain is too small, stable oscillation or speed offset may occur. PI parameters have a close relationship with the inertia of the system. Adjust PI parameters depending on different loads to meet various demands. P03.00 setting range: 0.0–200.0 P03.01 setting range: 0.000–10.000s P03.02 setting range: 0.00Hz–P03.05 P03.03 setting range: 0.0–200.0 P03.04 setting range: 0.000–10.000s P03.05 setting range: P03.02–P00.03 (Max.	20.0	○
P03.01	Speed-loop integral time 1		0.200s	○
P03.02	Low-point frequency for switching		5.00Hz	○
P03.03	Speed-loop proportional gain 2		20.0	○
P03.04	Speed-loop integral time 2		0.200s	○
P03.05	High-point frequency for switching		10.00Hz	○

Function code	Name	Description	Default	Modify
		output frequency)		
P03.06	Speed-loop output filter	0–8 (corresponding to $0–2^8$/10ms)	0	○
P03.07	Electromotive slip compensation coefficient of vector control	Slip compensation coefficient is used to adjust the slip frequency of the vector control and improve the speed control accuracy of the system. Adjusting the parameter properly can control the speed steady-state error. Setting range: 50–200%	100%	○
P03.08	Braking slip compensation coefficient of vector control		100%	○
P03.09	Current-loop proportional coefficient P	**Note:** • The two function codes impact the dynamic response speed and control accuracy of the system. Generally, you do not need to modify the two function codes. • Applicable to SVC mode 0 (P00.00=0). • The values of the two function codes are updated automatically after SM parameter autotuning is completed. Setting range: 0–65535	1000	○
P03.10	Current-loop integral coefficient I		1000	○
P03.11	Torque setting method	0–1: Keypad (P03.12) 2: AI1 (100% corresponding to triple the motor rated current) 3: AI2 4: AI3 (same as the above) 5: Pulse frequency HDIA 6: Multi-step torque 7: Modbus communication 8: PROFIBUS/CANopen communication 9: Ethernet communication 10: Reserved 11: PROFINET communication 12–17: Reserved 18: Keypad (for small power models)	0	○
P03.12	Torque set through keypad	-300.0%–300.0% (of the motor rated current)	20.0%	○
P03.13	Torque reference filter time	0.000–10.000s	0.010s	○
P03.14	Setting source of forward rotation upper-limit frequency in torque control	0: Keypad (P03.16) 1: AI1 (100% corresponding to the max. frequency) 2: AI2 (same as the above) 3: AI3 (same as the above) 4: Pulse frequency HDIA (same as the	0	○

Function code	Name	Description	Default	Modify
		above) 5: Multi-step setting (same as the above) 6: Modbus communication (same as the above) 7: PROFIBUS/CANopen communication (same as the above) 8: Ethernet communication (same as the above) 9: Reserved 10: PROFINET communication 11–17: Reserved 18: Keypad (for small power models)		
P03.15	Setting source of reverse rotation upper-limit frequency in torque control	0: Keypad (P03.17) 1: AI1 (100% corresponding to the max. frequency) 2: AI2 (same as the above) 3: AI3 (same as the above) 4: Pulse frequency HDIA (same as the above) 5: Multi-step setting (same as the above) 6: Modbus communication (same as the above) 7: PROFIBUS/CANopen communication (same as the above) 8: Ethernet communication (same as the above) 9: Reserved 10: PROFINET communication 11–17: Reserved 18: Keypad (for small power models.	0	○
P03.16	Forward rotation upper-limit frequency set through keypad in torque control	Used to set the frequency upper limits. 100% corresponds to the max. frequency. P03.16 sets the value when P03.14=1; P03.17 sets the value when P03.15=1. Setting range: 0.00Hz–P00.03 (Max. output frequency)	50.00Hz	○
P03.17	Reverse rotation upper-limit frequency set through keypad in torque control		50.00Hz	○
P03.18	Setting source of electromotive torque upper limit	0: Keypad (P03.20) 1: AI1 (100% corresponding to triple the motor rated current) 2: AI2 (same as the above) 3: AI3 (same as the above) 4: Pulse frequency HDIA	0	○

Function code	Name	Description	Default	Modify
		5: Modbus communication 6: PROFIBUS/CANopen communication 7: Ethernet communication 8: Reserved 9: PROFINET communication 10–17: Reserved 18: Keypad (for small power models)		
P03.19	Setting source of braking torque upper limit	0: Keypad (P03.21) 1: AI1 (100% corresponding to triple the motor rated current) 2: AI2 (same as the above) 3: AI3 (same as the above) 4: Pulse frequency HDIA 5: Modbus communication 6: PROFIBUS/CANopen communication 7: Ethernet communication 8: Reserved 9: PROFINET communication 10–17: Reserved 18: Keypad (for small power models)	0	○
P03.20	Electromotive torque upper limit set through keypad	Used to set torque limits. Setting range: 0.0–300.0% (of the motor rated current)	180.0%	○
P03.21	Braking torque upper limit set through keypad		180.0%	○
P03.22	Weakening coefficient in constant power zone	Used when the AM is in flux-weakening control. 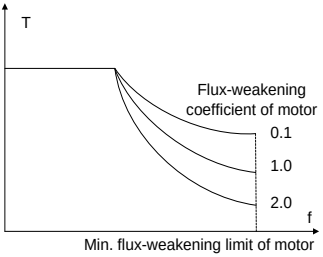 The function codes P03.22 and P03.23 are valid at constant power. The motor enters the flux-weakening state when the motor runs above the rated speed. Change the flux-weakening curvature by modifying the flux-weakening control coefficient. The larger the coefficient, the steeper the curve, the smaller the coefficient, the smoother	0.3	○
P03.23	Lowest weakening point in constant power zone		20%	○

Function code	Name	Description	Default	Modify
		the curve. P03.22 setting range: 0.1–2.0 P03.23 setting range: 10% –100.0%		
P03.24	Max. voltage limit	P03.24 sets the max. output voltage of the VFD, which is the percentage of motor rated voltage. Set the value according to onsite conditions. Setting range: 0.0–120%	100.0%	○
P03.25	Pre-exciting time	Pre-exciting is performed for the motor when the VFD starts up. A magnetic field is built up inside the motor to improve the torque performance during the start process. Setting range: 0.000–10.000s	0.300s	○
P03.26	Flux-weakening proportional gain	0–8000	1000	○
P03.27	Speed display selection in vector control	0: Display the actual value 1: Display the set value	0	○
P03.28	Static friction compensation coefficient	0.0–100.0%	0.0%	○
P03.29	Corresponding frequency point of static friction	0.50–P03.31	1.00Hz	○
P03.30	High speed friction compensation coefficient	0.0–100.0%	0.0%	○
P03.31	Corresponding frequency of high speed friction torque	P03.29–400.00Hz	50.00Hz	○
P03.32	Enabling torque control	0: Disable 1: Enable	0	◎
P03.33	Flux-weakening integral gain	0–8000	1200	○
P03.34	Reserved			
P03.35	Control mode optimization selection	Range: 0x0000–0x1111 Ones place: Torque command selection 0: Torque reference 1: Torque current reference Tens place: Reserved Hundreds place: indicates whether to enable speed-loop integral separation 0: Disable	0x0000	○

Function code	Name	Description	Default	Modify
		1: Enable Thousands place: Reserved		
P03.36	Speed-loop differential gain	0.00–10.00s	0.00s	○
P03.37	High-frequency current-loop proportional coefficient	P03.37 setting range: 0–65535 P03.38 setting range: 0–65535 P03.39 setting range: 0.0–100.0% (of the max. frequency)	1000	○
P03.38	High-frequency current-loop integral coefficient		1000	○
P03.39	Current-loop high-frequency switching threshold		100.0%	○
P03.40	Enabling inertia compensation	0: Disable 1: Enable	0	○
P03.41	Upper limit of inertia compensation torque	The max. inertia compensation torque is limited to prevent inertia compensation torque from being too large. Setting range: 0.0–150.0% (of the motor rated torque)	10.0%	○
P03.42	Inertia compensation filter times	Filter times of inertia compensation torque, used to smooth inertia compensation torque. Setting range: 0–10	7	○
P03.43	Inertia identification torque	Due to friction force, it is required to set certain identification torque for the inertia identification to be performed properly. 0.0–100.0% (of the motor rated torque)	10.0%	○
P03.44	Enabling motor inertia identification	0: No operation 1: Enable	0	◎
P03.45	Current loop proportional coefficient after autotuning	0–65535	0	●
P03.46	Current integral proportional coefficient after autotuning	0–65535	0	●

P04 group—V/F control

Function code	Name	Description	Default	Modify
P04.00	V/F curve setting of motor 1	This group of function code defines the V/F curve of motor 1 to meet the needs of different loads. 0: Straight-line V/F curve, applicable to constant torque loads 1: Multi-point V/F curve 2: Torque-down V/F curve (power of 1.3) 3: Torque-down V/F curve (power of 1.7) 4: Torque-down V/F curve (power of 2.0) Curves 2 – 4 are applicable to the torque loads such as fans and water pumps. You can adjust according to the characteristics of the loads to achieve best performance. 5: Customized V/F (V/F separation); in this mode, V can be separated from F and F can be adjusted through the frequency setting channel set by P00.06 or the voltage setting channel set by P04.27 to change the characteristics of the curve. **Note:** In the following figure, V_b is the motor rated voltage and f_b is the motor rated frequency. 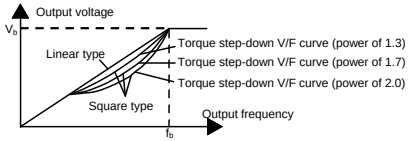	0	◎
P04.01	Torque boost of motor 1	In order to compensate for low-frequency torque characteristics, you can make some boost compensation for the output voltage. P04.01 is relative to the max. output voltage V_b. P04.02 defines the percentage of cut-off frequency of manual torque boost to the rated motor frequency f_b. Torque boost can improve the low-frequency torque characteristics of V/F. You need to select torque boost based on the load. For example, larger load requires larger torque boost, however, if the torque boost is too large, the motor will run at over-excitation, which may cause increased output current and motor overheating, thus decreasing the efficiency.	0.0%	○
P04.02	Torque boost cut-off of motor 1		20.0%	○

Function code	Name	Description	Default	Modify
		When torque boost is set to 0.0%, the VFD uses automatic torque boost. Torque boost cut-off threshold: Below this frequency threshold, torque boost is valid; exceeding this threshold will invalidate torque boost. 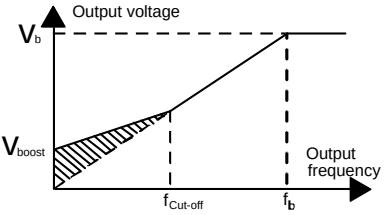 P04.01 setting range: 0.0%: Automatic; 0.1%–10.0% (of the rated voltage of motor 2) P04.02 setting range: 0.0%–50.0% (of the rated voltage of motor 2)		
P04.03	V/F frequency point 1 of motor 1	When P04.00=1 (multi-dot V/F curve), you can set the V/F curve through P04.03–P04.08. The V/F curve is generally set according to the load characteristics of the motor. **Note:** V1 < V2 < V3, f1 < f2 < f3. Too high voltage for low frequency will cause motor overheat or damage and cause VFD overcurrent stall or overcurrent protection. 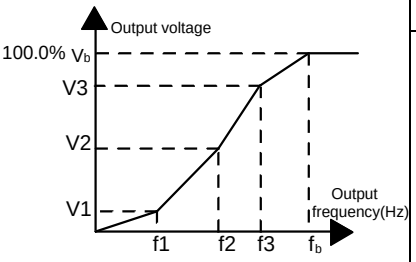 P04.03 setting range: 0.00Hz–P04.05 P04.04 setting range: 0.0%–110.0% (of the rated voltage of motor 1) P04.05 setting range: P04.03–P04.07 P04.06 setting range: 0.0%–110.0% (of the rated voltage of motor 1) P04.07 setting range: P04.05–P02.02 (Rated frequency of AM 1) or P04.05– P02.16 (Rated	0.00Hz	○
P04.04	V/F voltage point 1 of motor 1		00.0%	○
P04.05	V/F frequency point 2 of motor 1		0.00Hz	○
P04.06	V/F voltage point 2 of motor 1		0.0%	○
P04.07	V/F frequency point 3 of motor 1		0.00Hz	○
P04.08	V/F voltage point 3 of motor 1		0.0%	○

Function code	Name	Description	Default	Modify
		frequency of SM 1) Setting range of P04.08: 0.0%–110.0% (of the rated voltage of motor 1)		
P04.09	V/F slip compensation gain of motor 1	Used to compensate for the motor rotating speed change caused by load change in the space voltage vector mode, and thus improve the rigidity of the mechanical characteristics of the motor. You need to calculate the rated slip frequency of the motor as follows: $\triangle f=f_b-n*p/60$ Of which, f_b is the rated frequency of the motor, corresponding to function code P02.02. n is the rated rotating speed of the motor, corresponding to function code P02.03. p is the number of pole pairs of the motor. 100.0% corresponds to the rated slip frequency $\triangle f$ of motor 1. Setting range: 0.0–200.0%	0.0%	○
P04.10	Low-frequency oscillation control factor of motor 1	In space voltage vector control mode, the motor, especially the large-power motor, may experience current oscillation at certain frequencies, which may cause unstable motor running, or even VFD overcurrent. You can adjust the two function codes properly to eliminate such phenomenon. P04.10 setting range: 0–100 P04.11 setting range: 0–100 P04.12 setting range: 0.00Hz–P00.03 (Max. output frequency)	10	○
P04.11	High-frequency oscillation control factor of motor 1		10	○
P04.12	Oscillation control threshold of motor 1		30.00Hz	○
P04.13	V/F curve setting of motor 2	Used to define the V/F curve of motor 2 to meet the needs of different loads. 0: Straight-line V/F curve 1: Multi-point V/F curve 2: Torque-down V/F curve (power of 1.3) 3: Torque-down V/F curve (power of 1.7) 4: Torque-down V/F curve (power of 2.0) 5: Customized V/F curve (V/F separation) **Note:** Refer to the description for P04.00.	0	◎
P04.14	Torque boost of motor 2	P04.14 setting range: 0.0%: Automatic; 0.1%–10.0% (of the rated frequency of motor 2) P04.15 setting range: 0.0%–50.0% (of the rated frequency of motor 2) **Note:** Refer to the descriptions for P04.01 and P04.02.	0.0%	○
P04.15	Torque boost cut-off of motor 2		20.0%	○

Function code	Name	Description	Default	Modify
P04.16	V/F frequency point 1 of motor 2	**Note:** Refer to the descriptions for P04.03 and P04.08. P04.16 setting range: 0.00Hz–P04.18 P04.17 setting range: 0.0%–110.0% (of the rated voltage of motor 2) P04.18 setting range: P04.16–P04.20 P04.19 setting range: 0.0%–110.0% (of the rated voltage of motor 2) P04.20 setting range: P04.18–P12.02 (Rated frequency of AM 2) or P04.18– P12.16 (Rated frequency of SM 2) P04.21 setting range: 0.0%–110.0% (of the rated voltage of motor 2)	0.00Hz	○
P04.17	V/F voltage point 1 of motor 2		0.0%	○
P04.18	V/F frequency point 2 of motor 2		0.00Hz	○
P04.19	V/F voltage point 2 of motor 2		0.0%	○
P04.20	V/F frequency point 3 of motor 2		0.00Hz	○
P04.21	V/F voltage point 3 of motor 2		0.0%	○
P04.22	V/F slip compensation gain of motor 2	Used to compensate for the motor rotating speed change caused by load change in the space voltage vector mode, and thus improve the rigidity of the mechanical characteristics of the motor. You need to calculate the rated slip frequency of the motor as follows: $\triangle f=f_b-n*p/60$ Of which, f_b is the rated frequency of the motor 2, corresponding to function code P12.02. n is the rated rotating speed of the motor 2, corresponding to function code P12.03. p is the number of pole pairs of the motor. 100.0% corresponds to the rated slip frequency $\triangle f$ of motor 2. Setting range: 0.0–200.0%	0.0%	○
P04.23	Low-frequency oscillation control factor of motor 2	In space voltage vector control mode, the motor, especially the large-power motor, may experience current oscillation at certain frequencies, which may cause unstable motor running, or even VFD overcurrent. You can adjust the two function codes properly to eliminate such phenomenon. P04.23 setting range: 0–100 P04.24 setting range: 0–100 P04.25 setting range: 0.00Hz–P00.03 (Max. output frequency)	10	○
P04.24	High-frequency oscillation control factor of motor 2		10	○
P04.25	Oscillation control threshold of motor 2		30.00Hz	○
P04.26	Energy-saving run	0: Disable 1: Automatic energy-saving run In light-load state, the motor can adjust the output voltage automatically to achieve energy saving.	0	○

Function code	Name	Description	Default	Modify
P04.27	Voltage setting channel	0: Keypad (The output voltage is determined by P04.28.) 1: AI1 2: AI2 3: AI3 4: HDIA 5: Multi-step speed running (The setting is determined by group P10.) 6: PID 7: Modbus communication 8: PROFIBUS/CANopen communication 9: Ethernet communication 10: Reserved 11: PROFINET communication 12–17: Reserved 18: Keypad (for small power models)	0	○
P04.28	Voltage set through keypad	The function code is the voltage digital setting when "keypad" is selected as the voltage setting channel. Setting range: 0.0%–100.0%	100.0%	○
P04.29	Voltage increase time	Voltage increase time means the time needed for the VFD to accelerate from min. output voltage to the max. output frequency. Voltage decrease time means the time needed for the VFD to decelerate from the max. output frequency to min. output voltage. Setting range: 0.0–3600.0s	5.0s	○
P04.30	Voltage decrease time		5.0s	○
P04.31	Max. output voltage	The function codes are used to set the upper and lower limits of output voltage. 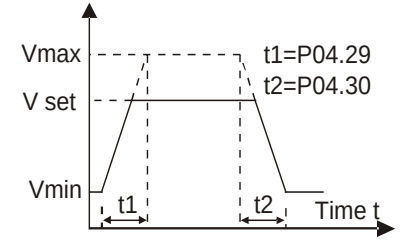 P04.31 setting range: P04.32 –100.0% (of the motor rated voltage) P04.32 setting range: 0.0%–P04.31	100.0%	◎
P04.32	Output min. voltage		0.0%	◎
P04.33	Weakening coefficient in constant power	1.00–1.30	1.00	○

Function code	Name	Description	Default	Modify
	zone			
P04.34	Pull-in current 1 in SM V/F control	When the SM VF control mode is enabled, the function code is used to set the reactive current of the motor when the output frequency is lower than the frequency specified by P04.36. Setting range: -100.0%–+100.0% (of the motor rated current)	20.0%	○
P04.35	Pull-in current 2 in SM V/F control	When the SM VF control mode is enabled, the function code is used to set the reactive current of the motor when the output frequency is higher than the frequency specified by P04.36. Setting range: -100.0%–+100.0% (of the motor rated current)	10.0%	○
P04.36	Frequency threshold for pull-in current switching in SM V/F control	When the SM V/F control mode is enabled, the function code is used to set the frequency threshold for the switching between pull-in current 1 and pull-in current 2. Setting range: 0.00Hz–P00.03 (Max. output frequency)	50.00Hz	○
P04.37	Reactive current closed-loop proportional coefficient in SM V/F control	When the SM V/F control mode is enabled, the function code is used to set the proportional coefficient of reactive current closed-loop control. Setting range: 0–3000	50	○
P04.38	Reactive current closed-loop integral time in SM V/F control	When the SM V/F control mode is enabled, the function code is used to set the integral coefficient of reactive current closed-loop control. Setting range: 0–3000	30	○
P04.39	Reactive current closed-loop output limit in SM VF control	When the SM V/F control mode is enabled, the function code is used to set the output limit of the reactive current closed-loop control. A greater value indicates a higher reactive closed-loop compensation voltage and higher output power of the motor. In general, you do not need to modify the function code. Setting range: 0–16000	8000	○
P04.40	Enabling IF mode for AM 1	0: Invalid 1: Enable	0	◎
P04.41	Current setting in IF mode for AM 1	When IF control is adopted for AM 1, the function code is used to set the output current. The value is a percentage in	120.0%	○

Function code	Name	Description	Default	Modify
		relative to the rated current of the motor. Setting range: 0.0–200.0%		
P04.42	Proportional coefficient in IF mode for AM 1	When IF control is adopted for AM 1, the function code is used to set the proportional coefficient of the output current closed-loop control. Setting range: 0–5000	350	○
P04.43	Integral coefficient in IF mode for AM 1	When IF control is adopted for AM 1, the function code is used to set the integral coefficient of the output current closed-loop control. Setting range: 0–5000	150	○
P04.44	Starting frequency point for switching off IF mode for AM 1	0.00–P04.50	10.00Hz	○
P04.45	Enabling IF mode for AM 2	0: Invalid 1: Enable	0	◎
P04.46	Current setting in IF mode for AM 2	When IF control is adopted for AM 2, the function code is used to set the output current. The value is a percentage in relative to the rated current of the motor. Setting range: 0.0–200.0%	120.0%	○
P04.47	Proportional coefficient in IF mode for AM 2	When IF control is adopted for AM 2, the function code is used to set the proportional coefficient of output current closed-loop control. Setting range: 0–5000	350	○
P04.48	Integral coefficient in IF mode for AM 2	When IF control is adopted for AM 2, the function code is used to set the integral coefficient of output current closed-loop control. Setting range: 0–5000	150	○
P04.49	Starting frequency point for switching off IF mode for AM 2	0.00–P04.51	10.00Hz	○
P04.50	End frequency point for switching off IF mode for AM 1	P04.44–P00.03	25.00Hz	○
P04.51	End frequency point for switching off IF mode for AM 2	P04.49–P00.03	25.00Hz	○
P04.52	VF energy-saving	0: Max. efficiency	0	○

Function code	Name	Description	Default	Modify
	mode selection	1: Optimal power factor 2: MTPA		
P04.53	Energy-saving gain coefficient	0.0%–400.0%	100.0	○
P04.54	Angle compensation coefficient in energy saving control	40.0%–200.0% **Note:** A small value of this parameter increases energy saving control effect, but this also reduces the load carrying capability for sudden load.	80.0%	○

P05 group—Input terminals

Function code	Name	Description	Default	Modify
P05.00	HDI input type	0x00–0x11 Ones place: HDIA input type 0: HDIA is high-speed pulse input 1: HDIA is digital input Tens place: Reserved	0x00	◎
P05.01	Function of S1	0: No function 1: Run forward 2: Run reversely 3: Three-wire running control 4: Jog forward 5: Jog reversely 6: Coast to stop 7: Reset faults 8: Pause running 9: External fault input 10: Increase frequency setting (UP) 11: Decrease frequency setting (DOWN) 12: Clear the frequency increase/decrease setting 13: Switch between A setting and B setting 14: Switch between combination setting and A setting 15: Switch between combination setting and B setting 16: Multi-step speed terminal 1	1	◎
P05.02	Function of S2		4	◎
P05.03	Function of S3		7	◎
P05.04	Function of S4 (choose one of S4 and Y1 output)		0	◎

Function code	Name	Description	Default	Modify
P05.05	Function of HDIA	17: Multi-step speed terminal 2 18: Multi-step speed terminal 3 19: Multi-step speed terminal 4 20: Pause multi-step speed running 21: ACC/DEC time selection 1 22: ACC/DEC time selection 2 23: Simple PLC stop reset 24: Pause simple PLC 25: Pause PID control 26: Pause wobbling frequency 27: Reset wobbling frequency 28: Counter reset 29: Switch between speed control and torque control 30: Disable ACC/DEC 31: Trigger the counter 32: Reserved 33: Clear the frequency increase/decrease setting temporarily 34: DC braking 35: Switch from motor 1 to motor 2 36: Switch the running command channel to keypad 37: Switch the running command channel to terminal 38: Switch the running command channel to communication 39: Pre-exciting command 40: Clear electricity consumption 41: Keep electricity consumption 42: Switch the setting source of braking torque upper limit to keypad 43–55: Reserved 56: Emergency stop 57–72: Reserved73: PID2 start 74: PID2 stop 75: Pause PID2 integral 76: Pause PID2 control 77: Switch PID2 polarities 78: Disable HVAC (only in stopped state) 79: Trigger fire signal 80: Pause PID1 control 81: Pause PID1 integral 82: Switch PID1 polarities 83: Trigger sleep mode 84: Trigger wakeup mode 85: Manual polling	0	◎
P05.06	Reserved			
P05.07	Reserved			

Function code	Name	Description	Default	Modify
		86: Pump cleaning signal 87: Water level upper limit of inlet pool 88: Water level lower limit of inlet pool 89: Water shortage level of inlet pool 90–95: Reserved 96: Manual soft startup for motor A 97: Manual soft startup for motor B 98: Manual soft startup for motor C 99: Manual soft startup for motor D 100: Manual soft startup for motor E 101: Manual soft startup for motor F 102: Manual soft startup for motor G 103: Manual soft startup for motor H 104: Disable motor A 105: Disable motor B 106: Disable motor C 107: Disable motor D 108: Disable motor E 109: Disable motor F 110: Disable motor G 111: Disable motor H		
P05.08	Input terminal polarity	Used to set the polarity of input terminals. When a bit is 0, the input terminal is positive; when a bit is 1, the input terminal is negative. 0x00–0x3F	0x00	○
P05.09	Digital input filter time	Used to specify the filter time of sampling of S1–S4 and HDIA terminals. In strong interference cases, increase the value to avoid maloperation. 0.000–1.000s	0.010s	○
P05.10	Virtual terminal setting	0x000–0x3F (0: Disable. 1: Enable) BIT0: S1 virtual terminal BIT1: S2 virtual terminal BIT2: S3 virtual terminal BIT3: S4 virtual terminal BIT4: HDIA virtual terminal BIT5: Reserved	0x00	◎
P05.11	Terminal control mode	Used to set the mode of terminal control. 0: Two-wire control 1, the enabling consistent with the direction. This mode is widely used. The defined FWD/REV terminal command determines the motor rotation direction.	0	◎

Function code	Name	Description	Default	Modify

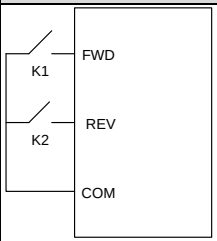

FWD	REV	Running command
OFF	OFF	Stop
ON	OFF	Forward running
OFF	ON	Reverse running
ON	ON	Hold

1: Two-wire control 2, the enabling separated from the direction. In this mode, FWD is the enabling terminal. The direction depends on the defined REV state.

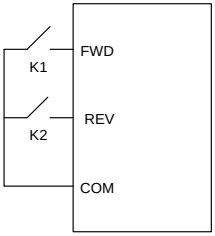

FWD	REV	Running command
OFF	OFF	Stop
ON	OFF	Forward running
OFF	ON	Stop
ON	ON	Reverse running

2: Three-wire control 1. This mode defines Sin as the enabling terminal, and the running command is generated by FWD, while the direction is controlled by REV. During running, the Sin terminal needs to be closed, and terminal FWD generates a rising edge signal, then the VFD starts to run in the direction set by the state of terminal REV; the VFD needs to be stopped by disconnecting terminal Sin.

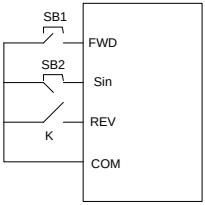

The direction control is as follows during running:

Sin	REV	Previous direction	Present direction
ON	OFF→ON	FWD run	REV run
		REV run	FWD run

<table>
<tr><th>Function code</th><th>Name</th><th>Description</th><th>Default</th><th>Modify</th></tr>
<tr><td></td><td></td><td>
<table>
<tr><td rowspan="2">ON</td><td rowspan="2">ON→OFF</td><td>REV run</td><td>FWD run</td></tr>
<tr><td>FWD run</td><td>REV run</td></tr>
<tr><td rowspan="2">ON→OFF</td><td>ON</td><td colspan="2" rowspan="2">Decelerate to stop</td></tr>
<tr><td>OFF</td></tr>
</table>
Sin: Three-wire control; FWD: Forward running; REV: Reverse running
3: Three-wire control 2. This mode defines Sin as the enabling terminal, and the running command is generated by FWD or REV, but the direction is controlled by both FWD and REV. During running, the Sin terminal needs to be closed, and terminal FWD or REV generates a rising edge signal to control the running and direction of the VFD; the VFD needs to be stopped by disconnecting terminal Sin.
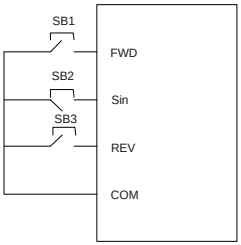

<table>
<tr><th>Sin</th><th>FWD</th><th>REV</th><th>Running direction</th></tr>
<tr><td rowspan="2">ON</td><td rowspan="2">OFF→ON</td><td>ON</td><td>FWD run</td></tr>
<tr><td>OFF</td><td>FWD run</td></tr>
<tr><td rowspan="2">ON</td><td>ON</td><td rowspan="2">OFF→ON</td><td>REV run</td></tr>
<tr><td>OFF</td><td>REV run</td></tr>
<tr><td>ON→OFF</td><td></td><td></td><td>Decelerate to stop</td></tr>
</table>
Sin: Three-wire control; FWD: Forward running; REV: Reverse running
Note: For two-wire controlled running mode, when the FWD/REV terminal is valid, if the VFD stops due to a stop command given by another source, the VFD does not run again after the stop command disappears even if the control terminal FWD/REV is still valid. To make the VFD run, you need to trigger FWD/REV again, for example, PLC
</td><td></td><td></td></tr>
</table>

Function code	Name	Description	Default	Modify
		single-cycle stop, fixed-length stop, and valid STOP/RST stop during terminal control. (See P07.04.)		
P05.12	S1 switch-on delay	Used to specify the delay time corresponding to the electrical level changes when the programmable input terminals switch on or switch off. 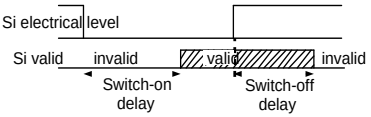 Setting range: 0.000–50.000s **Note:** After a virtual terminal is enabled, the state of the terminal can be changed only in communication mode. The communication address is 0x200A.	0.000s	○
P05.13	S1 switch-off delay		0.000s	○
P05.14	S2 switch-on delay		0.000s	○
P05.15	S2 switch-off delay		0.000s	○
P05.16	S3 switch-on delay		0.000s	○
P05.17	S3 switch-off delay		0.000s	○
P05.18	S4 switch-on delay		0.000s	○
P05.19	S4 switch-off delay		0.000s	○
P05.20	HDIA switch-on delay		0.000s	○
P05.21	HDIA switch-off delay		0.000s	○
P05.22–P05.23	Reserved			
P05.24	AI1 lower limit	Used to define the relationship between the analog input voltage and its corresponding setting. When the analog input voltage exceeds the range from the upper limit to the lower limit, the upper limit or lower limit is used. When the analog input is current input, 0mA–20mA current corresponds to 0V–10V voltage. In different applications, 100.0% of the analog setting corresponds to different nominal values. See the descriptions of each application section for details. The following figure illustrates the cases of several settings:	0.00V	○
P05.25	Corresponding setting of AI1 lower limit		0.0%	○
P05.26	AI1 upper limit		10.00V	○
P05.27	Corresponding setting of AI1 upper limit		100.0%	○
P05.28	AI1 input filter time		0.030s	○
P05.29	AI2 lower limit		-10.00V	○
P05.30	Corresponding setting of AI2 lower limit		-100.0%	○
P05.31	AI2 middle value 1		0.00V	○

Function code	Name	Description	Default	Modify
P05.32	Corresponding setting of AI2 middle value 1	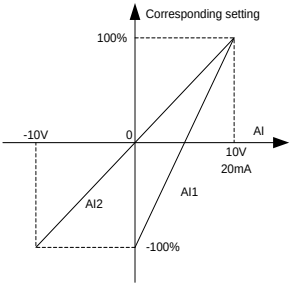 Input filter time: to adjust the sensitivity of analog input. Increasing the value properly can enhance analog input anti-interference but may reduce the sensitivity of analog input. **Note:** AI1 supports the 0–10V/0–20mA input. When AI1 selects the 0–20mA input, the corresponding voltage of 20mA is 10V. AI2 supports the -10–+10V input. P05.24 setting range: 0.00V–P05.26 P05.25 setting range: -300.0% –300.0% P05.26 setting range: P05.24–10.00V P05.27 setting range: -300.0% –300.0% P05.28 setting range: 0.000s–10.000s P05.29 setting range: -10.00V–P05.31 P05.30 setting range: -300.0% –300.0% P05.31 setting range: P05.29–P05.33 P05.32 setting range: -300.0% –300.0% P05.33 setting range: P05.31–P05.35 P05.34 setting range: -300.0% –300.0% P05.35 setting range: P05.33–10.00V P05.36 setting range: -300.0% –300.0% Setting range of P05.37: 0.000s–10.000s	0.0%	○
P05.33	AI2 middle value 2		0.00V	○
P05.34	Corresponding setting of AI2 middle value 2		0.0%	○
P05.35	AI2 upper limit		10.00V	○
P05.36	Corresponding setting of AI2 upper limit		100.0%	○
P05.37	AI2 input filter time		0.030s	○
P05.38	HDIA high-speed pulse input function selection	0: Frequency setting 1: Reserved 2: Reserved	0	◎
P05.39	HDIA lower limit frequency	0.000 kHz – P05.41	0.000 kHz	○
P05.40	Corresponding setting of HDIA lower limit frequency	-300.0%–300.0%	0.0%	○

Function code	Name	Description	Default	Modify
P05.41	HDIA upper limit frequency	P05.39–50.000kHz	50.000 kHz	○
P05.42	Corresponding setting of HDIA upper limit frequency	-300.0%–300.0%	100.0%	○
P05.43	HDIA frequency input filter time	0.000s–10.000s	0.030s	○
P05.44–P05.49	Reserved			
P05.50	AI1 input signal type	0: Voltage 1: Current **Note:** If the input type is current, the AI-I short cap on the control board needs to be shorted.	0	◎
P05.51–P05.52	Reserved			
P05.53	Keypad analog lower limit	0.00V–P05.54	0.00V	○
P05.54	Corresponding setting of keypad analog lower limit	-300.0%–300.0%	0.0%	○
P05.55	Keypad analog upper limit	P05.56–10.00V	10.00V	○
P05.56	Corresponding setting of keypad analog upper limit	-300.0%–300.0%	100.0%	○
P05.57	Keypad analog input filter time	0.000s–10.000s	0.030s	○

P06 group—Output terminals

Function code	Name	Description	Default	Modify
P06.00	Reserved			
P06.01	Y1 output	0: Invalid 1: Running	0	○
P06.02	Reserved		0	○

Function code	Name	Description	Default	Modify
P06.03	RO1 output	2: Running forward 3: Running reversely 4: Jogging 5: VFD in fault 6: Frequency level detection FDT1 7: Frequency level detection FDT2 8: Frequency reached 9: Running in zero speed 10: Upper limit frequency reached 11: Lower limit frequency reached 12: Ready for running 13: Pre-exciting 14: Overload pre-alarm 15: Underload pre-alarm 16: Simple PLC stage completed 17: Simple PLC cycle completed 18: Set counting value reached 19: Designated counting value reached 20: External fault is valid 21: Reserved 22: Running time reached 23: Modbus communication virtual terminal output 24: PROFIBUS/CANopen communication virtual terminal output 25: Ethernet communication virtual terminal output 26: DC bus voltage established 27–32: Reserved 33: In speed limit 34: PROFINET communication virtual terminal output 35: Reserved 36: Speed/position control switchover completed 37: Any frequency reached 38–47: Reserved 48: Fire mode activated 49: Pre-alarm of PID1 feedback too low 50: Pre-alarm of PID1 feedback too high 51: PID1 in sleep 52: PID2 in startup 53: PID2 stopped 54: Indication of run with backup pressure 55: Water shortage indication of inlet pool 56: Pre-alarm output 57: Control variable-frequency circulation	1	○
P06.04	RO2 output		5	○

<table>
<tr><th>Function code</th><th>Name</th><th>Description</th><th>Default</th><th>Modify</th></tr>
<tr><td></td><td></td><td>motor A
58: Control variable-frequency circulation motor B
59: Control variable-frequency circulation motor C
60: Control variable-frequency circulation motor D
61: Control variable-frequency circulation motor E
62: Control variable-frequency circulation motor F
63: Control variable-frequency circulation motor G
64: Control variable-frequency circulation motor H</td><td></td><td></td></tr>
<tr><td>P06.05</td><td>Output terminal polarity selection</td><td>Used to set the polarity of output terminals. When a bit is 0, the terminal is positive; when a bit is 1, the terminal is negative.
<table><tr><td>BIT3</td><td>BIT2</td><td>BIT1</td><td>BIT0</td></tr><tr><td>Reserved</td><td>RO1</td><td>Reserved</td><td>Y1</td></tr></table>Setting range: 0x0–0xF</td><td>0x00</td><td>○</td></tr>
<tr><td>P06.06</td><td>Y1 switch-on delay</td><td rowspan="6">Used to specify the delay time corresponding to the electrical level changes when the programmable output terminals switch on or switch off.
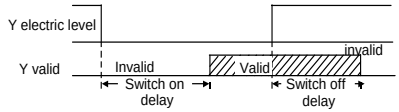
Setting range: 0.000–50.000s
Note: P06.08 and P06.09 are valid only when P06.00=1.</td><td>0.000s</td><td>○</td></tr>
<tr><td>P06.07</td><td>Y1 switch-off delay</td><td>0.000s</td><td>○</td></tr>
<tr><td>P06.08</td><td>Reserved</td><td></td><td></td></tr>
<tr><td>P06.09</td><td>Reserved</td><td></td><td></td></tr>
<tr><td>P06.10</td><td>RO1 switch-on delay</td><td>0.000s</td><td>○</td></tr>
<tr><td>P06.11</td><td>RO1 switch-off delay</td><td>0.000s</td><td>○</td></tr>
<tr><td>P06.12</td><td>Reserved</td><td></td><td></td></tr>
<tr><td>P06.13</td><td>Reserved</td><td></td><td></td></tr>
</table>

Function code	Name	Description	Default	Modify
P06.14	AO1 output	0: Running frequency (0–Max. output frequency) 1: Set frequency (0–Max. output frequency) 2: Ramp reference frequency (0–Max. output frequency) 3: Rotational speed (0–Speed corresponding to max. output frequency) 4: Output (0–Twice the inverter unit rated current) 5: Output current (0–Twice the motor rated current) 6: Output (0–1.5 times the inverter unit rated voltage) 7: Output power (0–Twice the motor rated power) 8: Set torque (0–Twice the motor rated torque) 9: Output torque (Absolute value, 0–±Twice the motor rated torque) 10: AI1 input (0–10V/0–20mA) 11: AI2 input (0–10V) 12: AI3 input (0–10V/0–20mA) 13: HDIA input (0.00–50.00kHz) 14: Value 1 set through Modbus communication (0–1000) 15: Value 2 set through Modbus communication (0–1000) 16: Value 1 set through PROFIBUS/CANopen communication (0–1000) 17: Value 2 set through PROFIBUS/CANopen communication (0–1000) 18: Value 1 set through Ethernet communication (0–1000) 19: Value 2 set through Ethernet communication (0–1000) 20: Reserved 21: Value 1 set through PROFINET communication (0–1000) 22: Torque current (bipolar, 0–Triple the motor rated current) 23: Exciting current (bipolar, 0–Triple the motor rated current) 24: Set frequency (bipolar, 0–Max. output frequency) 25: Ramp reference frequency (bipolar, 0–Max. output frequency) 26: Rotational speed (bipolar, 0–Speed	0	○
P06.15	AO0 output		0	○
P06.16	Reserved			

Function code	Name	Description	Default	Modify
		corresponding to max. output frequency) 27: Value 2 set through PROFINET communication (0–1000) 28: C_AO1 (Reserved) 29: C_AO2 (Reserved) 30: Rotational speed (0–Twice the motor rated synchronous speed) 31: Output torque 32: PID1 output 33: PID2 output 34: PID1 reference value 35: PID1 feedback value 36: PID2 reference value 37: PID2 feedback value 38–47: Reserved		
P06.17	AO1 output lower limit	Used to define the relationship between the output value and analog output. When the output value exceeds the allowed range, the output uses the lower limit or upper limit. When the analog output is current output, 1mA equals 0.5V. In different cases, the corresponding analog output of 100% of the output value is different. 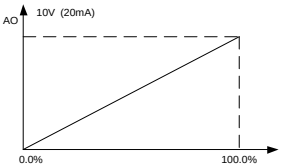 P06.17 setting range: -300.0%–P06.19 P06.18 setting range: 0.00V–10.00V P06.19 setting range: P06.17––300.0% P06.20 setting range: 0.00V–10.00V P06.21 setting range: 0.000s–10.000s	0.0%	○
P06.18	AO1 output corresponding to lower limit		0.00V	○
P06.19	AO1 output upper limit		100.0%	○
P06.20	AO1 output corresponding to upper limit		10.00V	○
P06.21	AO1 output filter time		0.000s	○
P06.22	AO0 output lower limit	-300.0%–P06.23	0.0%	○
P06.23	AO0 output corresponding to lower limit	0.00V–10.00V	0.00V	○
P06.24	AO0 output upper limit	P06.35–300.0%	100.0%	○
P06.25	AO0 output corresponding to upper limit	0.00V–10.00V	10.00V	○

Function code	Name	Description	Default	Modify
P06.26	AO0 output filter time	0.000s–10.000s	0.000s	○
P06.27–P06.32	Reserved			
P06.33	Detection value for frequency being reached	0–P00.03	1.00Hz	○
P06.34	Frequency reaching detection time	0–3600.0s	0.5s	○

P07 group—Human-machine interface

Function code	Name	Description	Default	Modify
P07.00	User password	0–65535 When you set the function code to a non-zero number, password protection is enabled. If you set the function code to 00000, the previous user password is cleared and password protection is disabled. After the user password is set and takes effect, you cannot enter the parameter menu if you enter an incorrect password. Please remember your password and save it in a secure place. After you exit the function code editing interface, the password protection function is enabled within 1 minute. If password protection is enabled, "0.0.0.0.0" is displayed when you press the PRG/ESC key again to enter the function code editing interface. You need to enter the correct user password to enter the interface. **Note:** Restoring the default values may delete the user password. Exercise caution when using this function.	0	○
P07.01	Parameter copy	Used to set the parameter copy mode. 0: No operation 1: Upload parameters to the keypad 2: Download all parameters (including motor parameters) 3: Download non-motor group parameters 4: Download motor group parameters **Note:** After any operation among 1–4 is	0	◎

Function code	Name	Description	Default	Modify
		completed, the parameter restores to 0. The upload and download functions are not applicable to group P29.		
P07.02	Key function selection	Range: 0x00–0x27 Ones place: Function of QUICK/JOG 0: No function 1: Jog 2: Reserved 3: Switch between forward and reverse rotating 4: Clear the UP/DOWN setting 5: Coast to stop 6: Switch command channels in sequence 7: Reserved Tens place: Reserved	0x01	◎
P07.03	Sequence of switching running-command channels by pressing QUICK	When P07.02=6, set the sequence of switching running-command channels by pressing this key. 0: Keypad→Terminal→Communication 1: Keypad←→Terminal 2: Keypad←→Communication 3: Terminal←→Communication	0	○
P07.04	Stop function validity of STOP/RST	Used to specify the stop function validity of STOP/RST. For fault reset, STOP/RST is valid in any conditions. 0: Valid only for keypad control 1: Valid both for keypad and terminal control 2: Valid both for keypad and communication control 3: Valid for all control modes	0	○
P07.05	Selection 1 of parameters displayed in running state	0x0000–0xFFFF Bit 0: Running frequency (Hz on) Bit 1: Set frequency (Hz blinking) Bit 2: Bus voltage (V on) Bit 3: Output voltage (V on) Bit 4: Output current (A on) Bit 5: Running speed (RPM on) Bit 6: Output power (% on) Bit 7: Output torque (% on) Bit 8: PID reference value (% blinking) Bit 9: PID feedback value (% on) Bit 10: Input terminal state Bit 11: Output terminal state Bit 12: Set torque (% on) Bit 13: Pulse count value	0x03FF	○

Function code	Name	Description	Default	Modify
		Bit 14: Motor overload percentage (% on) Bit 15: PLC and current step number of multi-step speed		
P07.06	Selection 2 of parameters displayed in running state	0x0000–0xFFFF Bit 0: AI1 (V on) Bit 1: AI2 (V on) Bit 2: AI3 (V on) BIT3: High-speed pulse HDIA frequency BIT4: Reserved Bit 5: VFD overload percentage (% on) Bit 6: Ramp frequency reference (HZ on) Bit 7: Linear speed Bit 8: AC incoming current Bit 9: Upper limit frequency Bit 10: AI0 (V on) Bit 11–Bit 15: Reserved	0x0000	○
P07.07	Selection of parameters displayed in stopped state	0x0000–0xFFFF Bit 0: Set frequency (Hz on, slow blinking) Bit 1: Bus voltage (V on) Bit 2: Input terminal state Bit 3: Output terminal state Bit 4: PID reference value (% blinking) Bit 5: PID feedback value (% on) Bit 6: Set torque (% on) Bit 7: AI1 (V on) Bit 8: AI2 (V on) Bit 9: AI3 (V on) BIT10: High-speed pulse HDIA frequency BIT11: High-speed pulse HDIB frequency Bit 12: Count value Bit 13: PLC and current step number of multi-step speed Bit 14: Upper limit frequency Bit 15: AI0 (V on)	0x00FF	○
P07.08	Frequency display coefficient	0.01–10.00 Display frequency = Running frequency * P07.08	1.00	○
P07.09	Rotational speed display coefficient	0.1–999.9% Mechanical rotation speed = 120 * (Displayed running frequency) * P07.09/(Motor pole pairs)	100.0%	○
P07.10	Linear speed display coefficient	0.1–999.9% Linear speed=(Mechanical rotation speed) * P07.10	1.0%	○

Function code	Name	Description	Default	Modify
P07.11	Rectifier bridge temperature	-20.0–120.0°C		●
P07.12	Inverter temperature	-20.0–120.0°C		●
P07.13	Control board software version	1.00–655.35		●
P07.14	Local accumulative running time	0–65535h		●
P07.15	VFD electricity consumption MSB	Used to display the electricity consumption of the VFD. VFD electricity consumption = P07.15*1000 + P07.16 P07.15 setting range: 0–65535 kWh (*1000) Setting range of P07.16: 0.0–999.9 kWh		●
P07.16	VFD electricity consumption LSB			●
P07.17	Reserved			
P07.18	VFD rated power	0.4–3000.0kW	Depends on model	●
P07.19	VFD rated voltage	50–1200V	Depends on model	●
P07.20	VFD rated current	0.1–6000.0A	Depends on model	●
P07.21	Factory bar code 1	0x0000–0xFFFF		●
P07.22	Factory bar code 2	0x0000–0xFFFF		●
P07.23	Factory bar code 3	0x0000–0xFFFF		●
P07.24	Factory bar code 4	0x0000–0xFFFF		●
P07.25	Factory bar code 3	0x0000–0xFFFF		●
P07.26	Factory bar code 4	0x0000–0xFFFF		●
P07.27	Present fault type	0: No fault 1: Inverter unit U-phase protection (OUt1) 2: Inverter unit V-phase protection (OUt2) 3: Inverter unit W-phase protection (OUt3) 4: Overcurrent during acceleration (OC1) 5: Overcurrent during deceleration (OC2) 6: Overcurrent during constant speed running (OC3) 7: Overvoltage during acceleration (OV1) 8: Overvoltage during deceleration (OV2) 9: Overvoltage during constant speed running (OV3)		●
P07.28	Last fault type			●
P07.29	2nd-last fault type			●
P07.30	3rd-last fault type			●
P07.31	4th-last fault type			●
P07.32	5th-last fault type			●

Function code	Name	Description	Default	Modify
		10: Bus undervoltage fault (UV) 11: Motor overload (OL1) 12: VFD overload (OL2) 13: Phase loss on input side (SPI) 14: Phase loss on output side (SPO) 15: Rectifier module overheat (OH1) 16: Inverter module overheat (OH2) 17: External fault (EF) 18: RS485 communication fault (CE) 19: Current detection fault (ItE) 20: Motor autotuning fault (tE) 21: EEPROM operation error (EEP) 22: PID feedback offline fault (PIDE) 23: Reserved 24: Running time reached (END) 25: Electronic overload (OL3) 26: Keypad communication error (PCE) 27: Parameter upload error (UPE) 28: Parameter download error (DNE) 29: PROFIBUS communication fault (E_dP) 30: Ethernet communication fault (E_NET) 31: CANopen communication fault (E-CAN) 32: To-ground short-circuit fault 1 (ETH1) 33: To-ground short-circuit fault 2 (ETH2) 34: Speed deviation fault (dEu) 35: Mal-adjustment fault (STo) 36: Underload fault (LL) 37–54: Reserved 55: Duplicate expansion card type (E-Err) 56: Reserved 57: PROFINET communication fault (E_PN) 58: CAN communication fault (ESCAN) 59: Motor overtemperature fault (OT) 60: Failure to identify the card at slot 1 (F1-Er) 61: Failure to identify the card at slot 2 (F2-Er) 62: Reserved 63: Communication timeout of the card at slot 1 (C1-Er) 64: Communication timeout of the card at slot 2 (C2-Er) 65–66: Reserved 67: Bacnet communication fault (E-BAC) 68: Reserved 69: CAN slave fault in master/slave		

Function code	Name	Description	Default	Modify
		synchronization (S-Err) 70–72: Reserved 73: Freezing fault 74: Stalling fault 75: Dry pumping fault 76–79: Reserved		
P07.33	Running frequency at present fault	0.00Hz–P00.03	0.00Hz	●
P07.34	Ramp reference frequency at present fault	0.00Hz–P00.03	0.00Hz	●
P07.35	Output current at present fault	0–1200V	0V	●
P07.36	Output current at present fault	0.0–6300.0A	0.0A	●
P07.37	Bus voltage at present fault	0.0–2000.0V	0.0V	●
P07.38	Max. temperature at present fault	-20.0–120.0°C	0.0°C	●
P07.39	Input terminal status at present fault	0x0000–0xFFFF	0x0000	●
P07.40	Output terminal status at present fault	0x0000–0xFFFF	0x0000	●
P07.41	Running frequency at last fault	0.00Hz–P00.03	0.00Hz	●
P07.42	Ramp reference frequency at last fault	0.00Hz–P00.03	0.00Hz	●
P07.43	Output voltage at last fault	0–1200V	0V	●
P07.44	Output current at last fault	0.0–6300.0A	0.0A	●
P07.45	Bus voltage at last fault	0.0–2000.0V	0.0V	●
P07.46	Temperature at last fault	-20.0–120.0°C	0.0°C	●
P07.47	Input terminal status at last fault	0x0000–0xFFFF	0x0000	●
P07.48	Output terminal status at last fault	0x0000–0xFFFF	0x0000	●
P07.49	Running frequency at	0.00Hz–P00.03	0.00Hz	●

Function code	Name	Description	Default	Modify
	2nd-last fault			
P07.50	Ramp reference frequency at 2nd-last fault	0.00Hz–P00.03	0.00Hz	●
P07.51	Output voltage at 2nd-last fault	0–1200V	0V	●
P07.52	Output current at 2nd-last fault	0.0–6300.0A	0.0A	●
P07.53	Bus voltage at 2nd-last fault	0.0–2000.0V	0.0V	●
P07.54	Temperature at 2nd-last fault	-20.0–120.0°C	0.0°C	●
P07.55	Input terminal status at 2nd-last fault	0x0000–0xFFFF	0x0000	●
P07.56	Output terminal status at 2nd-last fault	0x0000–0xFFFF	0x0000	●

P08 group—Enhanced functions

Function code	Name	Description	Default	Modify
P08.00	ACC time 2	For details, see P00.11 and P00.12. The VFD has four groups of ACC/DEC time, which can be selected by P05. The factory default ACC/DEC time of the VFD is the first group. Setting range: 0.0–3600.0s	Depends on model	○
P08.01	DEC time 2		Depends on model	○
P08.02	ACC time 3		Depends on model	○
P08.03	DEC time 3		Depends on model	○
P08.04	ACC time 4		Depends on model	○
P08.05	DEC time 4		Depends on model	○
P08.06	Running frequency of jog	The function code is used to define the reference frequency during jogging. Setting range: 0.00Hz–P00.03 (Max. output frequency)	5.00Hz	○
P08.07	ACC time for jogging	ACC time for jogging means the time needed for the VFD to accelerate from 0Hz to the max. output frequency (P00.03). DEC time for jogging means the time needed for the VFD to decelerate from the max. output frequency (P00.03) to 0Hz. Setting range: 0.0–3600.0s	Depends on model	○
P08.08	DEC time for jogging		Depends on model	○

Function code	Name	Description	Default	Modify
P08.09	Jump frequency 1	When the set frequency is within the range of jump frequency, the VFD runs at the boundary of jump frequency. The VFD can avoid mechanical resonance points by setting jump frequencies. The VFD supports the setting of three jump frequencies. If the jump frequency points are set to 0, this function is invalid. 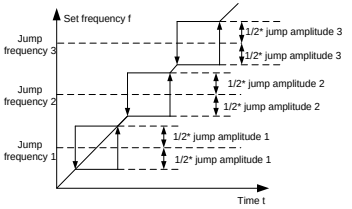 Setting range: 0.00Hz–P00.03 (Max. output frequency)	0.00Hz	○
P08.10	Jump frequency amplitude 1		0.00Hz	○
P08.11	Jump frequency 2		0.00Hz	○
P08.12	Jump frequency amplitude 2		0.00Hz	○
P08.13	Jump frequency 3		0.00Hz	○
P08.14	Jump frequency amplitude 3		0.00Hz	○
P08.15	Amplitude of wobbling frequency	0.0–100.0%	0.0%	○
P08.16	Amplitude of sudden jump frequency	0.0–50.0%	0.0%	○
P08.17	Rise time of wobbling frequency	0.1–3600.0s	5.0s	○
P08.18	Fall time of wobbling frequency	0.1–3600.0s	5.0s	○
P08.19	Switching frequency of ACC/DEC time	0.00Hz–P00.03 (Max. output frequency) 0.00Hz: No switchover If the running frequency is greater than P08.19, switch to ACC/DEC time 2.	0.00Hz	○
P08.20	Frequency threshold of the start of droop control	0.00–50.00Hz	2.00Hz	○
P08.21	Reference frequency of ACC/DEC time	0: Max. output frequency 1: Set frequency 2: 100Hz **Note:** Valid only for straight-line ACC/DEC	0	◎
P08.22	Output torque calculation method	0: Based on torque current 1: Based on output power	0	○
P08.23	Number of	0: Two	0	○

Function code	Name	Description	Default	Modify
	decimal points of frequency	1: One		
P08.24	Number of decimal points of linear speed	0: No decimal point 1: One decimal points 2: Two decimal points 3: Three decimal points	0	○
P08.25	Set counting value	P08.26–65535	0	○
P08.26	Designated counting value	0–P08.25	0	○
P08.27	Set running time	0–65535min	0min	○
P08.28	Auto fault reset count	Auto fault reset count: When the VFD uses automatic fault reset, it is used to set the number of automatic fault reset times. When the number of continuous reset times exceeds the value, the VFD reports a fault and stops. Auto fault reset interval: Time interval from when a fault occurred to when automatic fault reset takes effect. After VFD starts, If no fault occurred within 600s after the VFD starts, the number of automatic fault reset times is cleared. P08.28 setting range: 0–10 P08.29 setting range: 0.1–3600.0s	0	○
P08.29	Auto fault reset interval		1.0s	○
P08.30	Frequency decrease ratio in drop control	The output frequency of the VFD changes as the load changes. The function code is mainly used to balance the power when several motors drive a same load. Setting range: 0.00–50.00Hz	0.00Hz	○
P08.31	Channel for switching between motor 1 and motor 2	0x00–0x14 Ones place: Switchover channel 0: Terminal 1: Modbus communication 2: PROFIBUS/CANopen communication 3: Ethernet communication 4: PROFINET communication Tens place: indicates whether to enable switchover during running 0: Disable 1: Enable	0x00	◎

Function code	Name	Description	Default	Modify
P08.32	FDT1 electrical level detection value	When the output frequency exceeds the corresponding frequency of FDT electrical level, the multifunction digital output terminal continuously outputs the signal of "Frequency level detection FDT". The signal is invalid only when the output frequency decreases to a value lower than the frequency corresponding to (FDT electrical level−FDT lagging detection value). 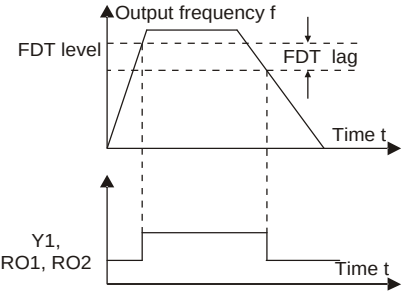 P08.32 setting range: 0.00Hz–P00.03 (Max. output frequency) P08.33 setting range: 0.0–100.0% (FDT1 electrical level) P08.34 setting range: 0.00Hz–P00.03 (Max. output frequency) P08.35 setting range: 0.0–100.0% (FDT2 electrical level)	50.00Hz	○
P08.33	FDT1 lagging detection value		5.0%	○
P08.34	FDT2 electrical level detection value		50.00Hz	○
P08.35	FDT2 lagging detection value		5.0%	○
P08.36	Detection value for frequency being reached	When the output frequency is within the detection range, the multifunction digital output terminal outputs the signal of "Frequency reached". 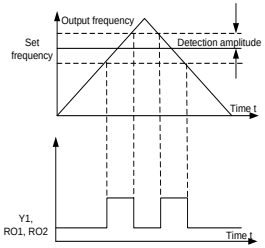 	0.00Hz	○

Function code	Name	Description	Default	Modify
		Setting range: 0.00Hz–P00.03 (Max. output frequency)		
P08.37	Reserved			
P08.38	Reserved			
P08.39	Cooling-fan running mode	0x0000–0x0041 Ones place: Run mode 0: Normal mode 1: Permanent running after power-on Tens place: Reserved Hundreds place: 0: Max. air speed 1: Automatic speed regulation Thousands place: Reserved	0x0100	○
P08.40	PWM selection	0x0000–0x1121 Ones place: PWM mode selection 0: PWM mode 1, 3PH modulation and 2PH modulation 1: PWM mode 2, 3PH modulation Tens place: PWM carrier frequency limit 0: Low-speed carrier frequency limit mode 1 1: Low-speed carrier frequency limit mode 2 2: No limit on carrier frequency Hundreds place: Deadzone compensation method 0: Compensation method 1 1: Compensation method 2 Thousands place: PWM loading mode selection 0: Interruptive loading 1: Normal loading	0x1101	◎
P08.41	Overmodulation selection	0x00–0x1111 Ones place: 0: Disable 1: Enable Tens place: 0: Mild overmodulation 1: Deepened overmodulation Hundreds: Carrier frequency limit 0:Yes 1:No Thousands: Output voltage compensation 0: No 1: Yes	1000	◎
P08.42	Keypad digital control setting	0x0000–0x1223 LED ones place: 0: Both the ∧/∨ key and digital potentiometer	0x0000	○

Function code	Name	Description	Default	Modify
		can be used for the control. 1: Only the ∧/∨ key can be used for the control. 2: Only the digital potentiometer can be used for the control. 3: Neither the ∧/∨ key nor the digital potentiometer can be used for the control. Tens place: Frequency control selection 0: Valid only when P00.06=0 or P00.07=0 1: Valid for all frequency setting methods 2: Invalid for multi-step speed running when multi-step speed running has the priority LED hundreds place: Action selection for stop 0: Setting is valid. 1: Valid during running, cleared after stop 2: Valid during running, cleared after a stop command is received LED thousands place: Indicates whether to enable the integral function through the ∧/∨ key and digital potentiometer. 0: Disable the integral function 1: Enable the integral function		
P08.43	Keypad digital potentiometer integral rate	0.01–10.00s	0.10s	○
P08.44	UP/DOWN terminal control setting	0x000–0x221 Ones place: Frequency setting selection 0: The setting made through UP/DOWN is valid. 1: The setting made through UP/DOWN is invalid. Tens place: Frequency control selection 0: Valid only when P00.06=0 or P00.07=0 1: Valid for all frequency setting methods 2: Invalid for multi-step speed running when multi-step speed running has the priority Hundreds place: Action selection for stop 0: Setting is valid. 1: Valid during running, cleared after stop 2: Valid during running, cleared after a stop command is received	0x000	○
P08.45	Frequency increment integral rate of the UP terminal	0.01–50.00Hz/s	0.50Hz/s	○
P08.46	Frequency	0.01–50.00Hz/s	0.50Hz/s	○

Function code	Name	Description	Default	Modify
	integral rate of the DOWN terminal			
P08.47	Action selection at power-off during frequency setting	0x000–0x111 Ones place: Action selection at power-off during frequency adjusting through digitals. 0: Save the setting at power-off. 1: Clear the setting at power-off. Action selection at power-off during frequency adjusting through Modbus communication 0: Save the setting at power-off. 1: Clear the setting at power-off. Hundreds place: Action selection at power-off during frequency adjusting through DP communication methods 0: Save the setting at power-off. 1: Clear the setting at power-off.	0x000	○
P08.48	Initial electricity consumption MSB	Used to set the initial electricity consumption. Initial electricity consumption = P08.48*1000 + P08.49 P08.48 setting range: 0–59999 kWh (k) P08.49 setting range: 0.0–999.9 kWh	0kWh	○
P08.49	Initial electricity consumption LSB		0.0kWh	○
P08.50	Magnetic flux braking	Used to enable magnetic flux braking. 0: Invalid 100–150: A larger coefficient indicates stronger braking. The VFD can quickly slow down the motor by increasing the magnetic flux. The energy generated by the motor during braking can be transformed into heat energy by increasing the magnetic flux. The VFD monitors the state of the motor continuously even during the magnetic flux period. Magnetic flux braking can be used for motor stop, as well as for motor rotation speed change. The other advantages include: Braking is performed immediately after the stop command is given. The braking can be started without waiting for magnetic flux weakening.	0	○

Function code	Name	Description	Default	Modify
		The cooling is better. The current of the stator other than the rotor increases during magnetic flux braking, while the cooling of the stator is more effective than the rotor.		
P08.51	VFD input power factor	This function code is used to adjust the current display value on the AC input side. 0.00–1.00	0.56	○
P08.52	Reserved			
P08.53	Upper limit frequency bias value in torque control	0.00 Hz–P00.03(Max. frequency) **Note:** Valid only for torque control.	0.00Hz	○
P08.54	Upper limit frequency ACC/DEC selection in torque control	0: No limit on acceleration or deceleration 1: ACC/DEC time 1 2: ACC/DEC time 2 3: ACC/DEC time 3 4: ACC/DEC time 4	0	○
P08.55	Carrier frequency change with temperature	0: Disable 1: Enable **Note:** When the VFD detects that the heatsink temperature exceeds the rated temperature, it automatically decreases the carrier frequency to lower the temperature rise. When the temperature decreases to a specified value, the carrier frequency restores to the setting. This function can reduce the VFD overheat alarm reporting chances.	1	○
P08.56	Temperature point of carrier frequency reduction	40.0–80.0°C	65.0°C	○
P08.57	Wait time of carrier frequency reduction	0–30min	10	○
P08.58	Output phase loss detection delay during running	0.0–360.0s **Note:** When the run time exceeds the delay, the VFD detects for output phase loss.	5.0s	○

P09 group—PID control

Function code	Name	Description	Default	Modify
P09.00	PID reference source	When frequency command selection	0	○

Function code	Name	Description	Default	Modify
		(P00.06, P00. 07) is 7, or channel of voltage setup (P04.27) is 6, the running mode of VFD is process PID control. The function code determines the target given channel during the PID process. 0: Set by P09.01 1: AI1 2: AI2 3: AI3 4: High-speed pulse HDIA 5: Multi-step running 6: Modbus communication 7: PROFIBUS/CANopen communication 8: Ethernet communication 9: Reserved 10: PROFINET communication The set target of process PID is a relative value, for which 100% equals 100% of the feedback signal of the controlled system. The system always performs calculation by using a relative value (0–100.0%).		
P09.01	PID digital setting	The function code is mandatory when P09.00=0. The base value of The function code is the feedback of the system. Setting range: -100.0%–100.0%	0.0%	○
P09.02	PID feedback source	Used to select the PID feedback channel. 0: AI1 1: AI2 2: AI3 3: High-speed pulse HDIA 4: Modbus communication 5: PROFIBUS/CANopen communication 6: Ethernet communication 7: Reserved 8: PROFINET communication **Note:** The reference channel and feedback channel cannot be duplicate. Otherwise, effective PID control cannot be achieved.	0	○
P09.03	PID output characteristics selection	0: PID output is positive. When the feedback signal is greater than the PID reference value, the output frequency of the VFD will decrease to balance the PID. Example: PID control on strain during unwinding. 1: PID output is negative. When the feedback signal is greater than the PID reference value, the output frequency of the VFD will increase to balance the PID.	0	○

Function code	Name	Description	Default	Modify
		Example: PID control on strain during unwinding.		
P09.04	Proportional gain (Kp)	The function is applied to the proportional gain P of PID input. P determines the strength of the whole PID adjuster. The value 100 indicates that when the difference between the PID feedback value and given value is 100%, the range within which the PID regulator can regulate the output frequency command is the max. frequency (ignoring integral function and differential function). Setting range: 0.00–100.00	1.80	○
P09.05	Integral time (Ti)	Used to determine the speed of the integral adjustment on the deviation of PID feedback and reference from the PID regulator. When the deviation of PID feedback and reference is 100%, the integral adjuster works continuously during the time (ignoring proportional and differential function) to achieve the max. output frequency (P00.03) or the max. voltage (P04.31). Shorter integral time indicates stronger adjustment. Setting range: 0.00–10.00s	0.90s	○
P09.06	Differential time (Td)	Used to determine the strength of the change ratio adjustment on the deviation of PID feedback and reference from the PID regulator. If the PID feedback changes 100% during the time, the adjustment of the differential regulator (ignoring proportional and integral function) is the max. output frequency (P00.03) or the max. voltage (P04.31). Longer differential time indicates stronger adjustment. Setting range: 0.00–10.00s	0.00s	○
P09.07	Sampling cycle (T)	Used to indicate the sampling cycle of feedback. The regulator calculates in each sampling cycle. A longer sampling cycle indicates slower response. Setting range: 0.001–10.000s	0.001s	○
P09.08	PID control deviation limit	The output of the PID system is relative to the max. deviation of the closed loop reference. As shown in the following	0.0%	○

Function code	Name	Description	Default	Modify
		figure, the PID regulator stops regulating in the range of deviation limit. Set the function parameter properly to adjust the accuracy and stability of the PID system. 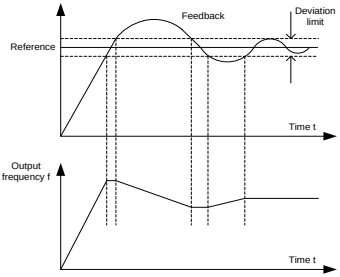 Setting range: 0.0–100.0%		
P09.09	PID output upper limit	The function codes are used to set the upper and lower limits of PID regulator output values. 100.0% corresponds to the max. output frequency (P00.03) or max. voltage (P04.31). P09.09 setting range: P09.10––100.0% P09.10 setting range: -100.0%–P09.09	100.0%	○
P09.10	PID output lower limit		0.0%	○
P09.11	Feedback offline detection value	Used to set the PID feedback offline detection value. When the feedback value is smaller than or equal to the feedback offline detection value, and the duration exceeds the value specified by P09.12, the VFD reports "PID feedback offline fault" and the keypad displays PIDE. 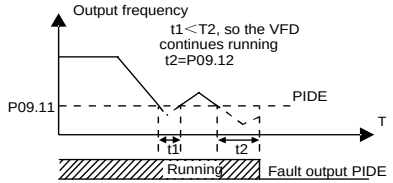 P09.11 setting range: 0.0–100.0% P09.12 setting range: 0.0–3600.0s	0.0%	○
P09.12	Feedback offline detection time		1.0s	○
P09.13	PID control selection	0x0000–0x1111 Ones place: 0: Continue integral control after the frequency reaches upper/lower limit 1: Stop integral control after the frequency reaches upper/lower limit Tens place: 0: Same as the main reference direction	0x0001	○

Function code	Name	Description	Default	Modify
		1: Contrary to the main reference direction Hundreds place: 0: Limit as per the max. frequency 1: Limit as per A frequency Thousands place: 0: A+B frequency. ACC/DEC of main reference A frequency source buffering is invalid. 1: A+B frequency. ACC/DEC of main reference A frequency source buffering is valid. The ACC/DEC is determined by P08.04 (ACC time 4).		
P09.14	Low frequency proportional gain (Kp)	0.00–100.00 Low-frequency switching point: 5.00Hz, high-frequency switching point: 10.00Hz (P09.04 corresponds to high-frequency parameter), and the middle is the linear interpolation between these two points.	1.00	○
P09.15	ACC/DEC time of PID command	0.0–1000.0s	0.0s	○
P09.16	PID output filter time	0.000–10.000s	0.000s	○
P09.17	Reserved			
P09.18	Low frequency integral time (Ti)	0.00–10.00s	0.90s	○
P09.19	Low frequency differential time (Td)	0.00–10.00s	0.00s	○
P09.20	Low frequency point for PID parameter switching	0.00–P09.21	5.00Hz	○
P09.21	High frequency point for PID parameter switching	P09.20–P00.04	10.00Hz	○

P10 group—Simple PLC and multi-step speed control

Function code	Name	Description	Default	Modify
P10.00	Simple PLC mode	0: Stop after running once. The VFD stops automatically after running for one cycle, and it can be started only after receiving the running command. 1: Keep running in the final value after	0	○

Function code	Name	Description	Default	Modify
		running for one cycle. The VFD keeps the running frequency and direction of the last section after a single cycle. 2: Cyclic running. The VFD enters the next cycle after completing one cycle until receiving the stop command.		
P10.01	Simple PLC memory selection	0: Without memory at power failure 1: Memory at power-off. The PLC memories its running stage and running frequency before power-off.	0	○
P10.02	Multi-step speed 0	Frequency setting range for steps from step 0 to step 15: -100.0–100.0%. 100.0% corresponds to the max. output frequency P00.03. Running time setting range for steps from step 0 to step 15: 0.0–6553.5s(min). The time unit is specified by P10.37. When simple PLC operation is selected, it is required to set P10.02–P10.33 to determine the running frequency and running time of each step. **Note:** The symbol of multi-step speed determines the running direction of simple PLC, and the negative value means reverse running. 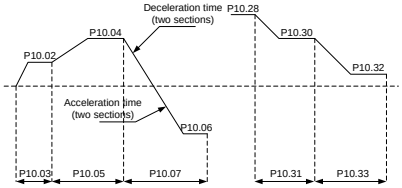 When selecting multi-step speed running, the multi-step speed is within the range of -fmax–fmax, and it can be set continuously. The start/stop of multi-step stop running is also determined by P00.01. The VFD supports the setting of 16-step speed, which are set by combined codes of multi-step terminals 1–4 set by S terminals, corresponding to function code P05.01–P05.06) and correspond to multi-step speed 0 to multi-step speed 15.	0.0%	○
P10.03	Running time of step 0		0.0s (min)	○
P10.04	Multi-step speed 1		0.0%	○
P10.05	Running time of step 1		0.0s (min)	○
P10.06	Multi-step speed 2		0.0%	○
P10.07	Running time of step 2		0.0s (min)	○
P10.08	Multi-step speed 3		0.0%	○
P10.09	Running time of step 3		0.0s (min)	○
P10.10	Multi-step speed 4		0.0%	○
P10.11	Running time of step 4		0.0s (min)	○
P10.12	Multi-step speed 5		0.0%	○
P10.13	Running time of step 5		0.0s (min)	○
P10.14	Multi-step speed 6		0.0%	○
P10.15	Running time of step 6		0.0s (min)	○
P10.16	Multi-step speed 7		0.0%	○
P10.17	Running time of step 7		0.0s (min)	○
P10.18	Multi-step speed 8		0.0%	○
P10.19	Running time of step 8		0.0s (min)	○
P10.20	Multi-step speed 9		0.0%	○
P10.21	Running time of step 9		0.0s (min)	○
P10.22	Multi-step speed		0.0%	○

<table>
<tr><th>Function code</th><th>Name</th><th>Description</th><th>Default</th><th>Modify</th></tr>
<tr><td></td><td>10</td><td rowspan="16">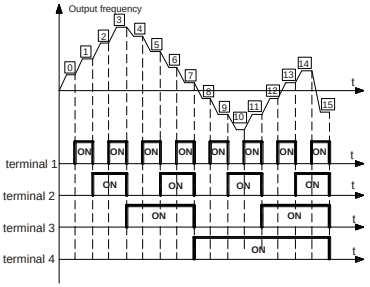

When terminal 1, terminal 2, terminal 3 and terminal 4 are OFF, the frequency input mode is set by P00.06 or P00.07. When terminal 1, terminal 2, terminal 3 and terminal 4 are not all OFF, the frequency set by multi-step speed will prevail, and the priority of multi-step setting is higher than that of the keypad, analog, high-speed pulse, PID, and communication settings.
The relation between terminal 1, terminal 2, terminal 3 and terminal 4 are shown in the following (T indicates terminal).
<table>
<tr><td>T1</td><td>OFF</td><td>ON</td><td>OFF</td><td>ON</td><td>OFF</td><td>ON</td><td>OFF</td><td>ON</td></tr>
<tr><td>T2</td><td>OFF</td><td>OFF</td><td>ON</td><td>ON</td><td>OFF</td><td>OFF</td><td>ON</td><td>ON</td></tr>
<tr><td>T3</td><td>OFF</td><td>OFF</td><td>OFF</td><td>OFF</td><td>ON</td><td>ON</td><td>ON</td><td>ON</td></tr>
<tr><td>T4</td><td>OFF</td><td>OFF</td><td>OFF</td><td>OFF</td><td>OFF</td><td>OFF</td><td>OFF</td><td>OFF</td></tr>
<tr><td>Step</td><td>0</td><td>1</td><td>2</td><td>3</td><td>4</td><td>5</td><td>6</td><td>7</td></tr>
<tr><td>T1</td><td>OFF</td><td>ON</td><td>OFF</td><td>ON</td><td>OFF</td><td>ON</td><td>OFF</td><td>ON</td></tr>
<tr><td>T2</td><td>OFF</td><td>OFF</td><td>ON</td><td>ON</td><td>OFF</td><td>OFF</td><td>ON</td><td>ON</td></tr>
<tr><td>T3</td><td>OFF</td><td>OFF</td><td>OFF</td><td>OFF</td><td>ON</td><td>ON</td><td>ON</td><td>ON</td></tr>
<tr><td>T4</td><td>ON</td><td>ON</td><td>ON</td><td>ON</td><td>ON</td><td>ON</td><td>ON</td><td>ON</td></tr>
<tr><td>Step</td><td>8</td><td>9</td><td>10</td><td>11</td><td>12</td><td>13</td><td>14</td><td>15</td></tr>
</table></td><td></td><td></td></tr>
<tr><td>P10.23</td><td>Running time of step 10</td><td>0.0s (min)</td><td>○</td></tr>
<tr><td>P10.24</td><td>Multi-step speed 11</td><td>0.0%</td><td>○</td></tr>
<tr><td>P10.25</td><td>Running time of step 11</td><td>0.0s (min)</td><td>○</td></tr>
<tr><td>P10.26</td><td>Multi-step speed 12</td><td>0.0%</td><td>○</td></tr>
<tr><td>P10.27</td><td>Running time of step 12</td><td>0.0s (min)</td><td>○</td></tr>
<tr><td>P10.28</td><td>Multi-step speed 13</td><td>0.0%</td><td>○</td></tr>
<tr><td>P10.29</td><td>Running time of step 13</td><td>0.0s (min)</td><td>○</td></tr>
<tr><td>P10.30</td><td>Multi-step speed 14</td><td>0.0%</td><td>○</td></tr>
<tr><td>P10.31</td><td>Running time of step 14</td><td>0.0s (min)</td><td>○</td></tr>
<tr><td>P10.32</td><td>Multi-step speed 15</td><td>0.0%</td><td>○</td></tr>
<tr><td>P10.33</td><td>Running time of step 15</td><td>0.0s (min)</td><td>○</td></tr>
<tr><td>P10.34</td><td>ACC/DEC time of steps 0–7 of simple PLC</td><td rowspan="2">The description is as follows:
<table>
<tr><th>Code</th><th colspan="2">Binary</th><th>Step</th><th>ACC/DEC time 1</th><th>ACC/DEC time 2</th><th>ACC/DEC time 3</th><th>ACC/DEC time 4</th></tr>
<tr><td rowspan="10">P10.34</td><td>BIT1</td><td>BIT0</td><td>0</td><td>00</td><td>01</td><td>10</td><td>11</td></tr>
<tr><td>BIT3</td><td>BIT2</td><td>1</td><td>00</td><td>01</td><td>10</td><td>11</td></tr>
<tr><td>BIT5</td><td>BIT4</td><td>2</td><td>00</td><td>01</td><td>10</td><td>11</td></tr>
<tr><td>BIT7</td><td>BIT6</td><td>3</td><td>00</td><td>01</td><td>10</td><td>11</td></tr>
<tr><td>BIT9</td><td>BIT8</td><td>4</td><td>00</td><td>01</td><td>10</td><td>11</td></tr>
</table></td><td>0x0000</td><td>○</td></tr>
<tr><td>P10.35</td><td>ACC/DEC time of steps 8–15 of simple PLC</td><td>0x0000</td><td>○</td></tr>
</table>

Function code	Name	Description	Default	Modify
		<table><tr><td></td><td>BIT11</td><td>BIT10</td><td>5</td><td>00</td><td>01</td><td>10</td><td>11</td></tr><tr><td></td><td>BIT13</td><td>BIT12</td><td>6</td><td>00</td><td>01</td><td>10</td><td>11</td></tr><tr><td></td><td>BIT15</td><td>BIT14</td><td>7</td><td>00</td><td>01</td><td>10</td><td>11</td></tr><tr><td rowspan="8">P10.35</td><td>BIT1</td><td>BIT0</td><td>8</td><td>00</td><td>01</td><td>10</td><td>11</td></tr><tr><td>BIT3</td><td>BIT2</td><td>9</td><td>00</td><td>01</td><td>10</td><td>11</td></tr><tr><td>BIT5</td><td>BIT4</td><td>10</td><td>00</td><td>01</td><td>10</td><td>11</td></tr><tr><td>BIT7</td><td>BIT6</td><td>11</td><td>00</td><td>01</td><td>10</td><td>11</td></tr><tr><td>BIT9</td><td>BIT8</td><td>12</td><td>00</td><td>01</td><td>10</td><td>11</td></tr><tr><td>BIT11</td><td>BIT10</td><td>13</td><td>00</td><td>01</td><td>10</td><td>11</td></tr><tr><td>BIT13</td><td>BIT12</td><td>14</td><td>00</td><td>01</td><td>10</td><td>11</td></tr><tr><td>BIT15</td><td>BIT14</td><td>15</td><td>00</td><td>01</td><td>10</td><td>11</td></tr></table> Select corresponding acceleration/deceleration time, and then convert 16-bit binary number into hexadecimal number, finally, and then set corresponding function codes. ACC/DEC time 1 is set by P00.11 and P00.12; ACC/DEC time 2 is set by P08.00 and P08.01; ACC/DEC time 3 is set by P08.02 and P08.03; ACC/DEC time 4 is set by P08.04 and P08.05. Setting range: 0x0000 –0xFFFF		
P10.36	PLC restart mode	0: Restart from step 0, namely if the VFD stops during running (caused by stop command, fault or power down), it will run from the first step after restart. 1: Continue running from the step frequency when interruption occurred, namely if the VFD stops during running (caused by stop command or fault), it will record the running time of current step, and enters this step automatically after restart, then continue running at the frequency defined by this step in the remaining time.	0	◎
P10.37	Multi-step time unit	0: second; the running time of each step is counted in seconds 1: minute; the running time of each step is counted in minutes	0	◎

P11 group—Protection parameters

<table>
<tr><th>Function code</th><th>Name</th><th>Description</th><th>Default</th><th>Modify</th></tr>
<tr><td>P11.00</td><td>Protection against phase loss</td><td>0x000–0x111
Ones place:
0: Disable software input phase loss protection.
1: Enable software input phase loss protection.
Tens place:
0: Disable output phase loss protection.
1: Enable output phase loss protection.
Hundreds place: Reserved</td><td>0x011</td><td>○</td></tr>
<tr><td>P11.01</td><td>Frequency drop at transient power-off</td><td>0: Disable
1: Enable
If the bus voltage drops to the sudden frequency decreasing point due to power failure, the VFD decreases the running frequency by using the constant bus voltage control method, which makes the motor in power generation state. The regenerative power can maintain the bus voltage to ensure normal running of the VFD until the recovery of power.<table><tr><th>Voltage class</th><td>220V</td><td>380V</td><td>660V</td></tr><tr><th>Frequency decrease at sudden power failure</th><td>260V</td><td>460V</td><td>800V</td></tr></table>Note:
This function can avoid VFD stop that is made for the purpose of protection in grid switchover.
This function can be enabled only when the input phase loss protection function is disabled.</td><td>0</td><td>○</td></tr>
<tr><td>P11.02</td><td>Reserved</td><td></td><td></td><td></td></tr>
</table>

Function code	Name	Description	Default	Modify
P11.03	Overvoltage stalling protection	0: Disable 1: Enable 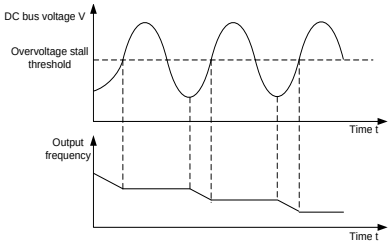 If the bus voltage exceeds the overvoltage stalling point, the motor is in power generation state, and the overvoltage stalling protection function takes effect to regulate output frequency (that is, consume unnecessary regenerative electricity).	1	○
P11.04	Overvoltage stalling protection voltage	120–150% (standard bus voltage) (380V)	136%	○
		120–150% (standard bus voltage) (220V)	120%	
P11.05	Current limit mode	During accelerated running, as the load is too large, the actual acceleration rate of motor is lower than that of output frequency, if no measures are taken, the VFD may trip due to overcurrent during acceleration. 0x00–0x11 Ones place: Current limit action selection 0: Invalid 1: Always valid Tens: Hardware current limit overload alarm selection 0: Valid 1: Invalid	0x01	◎
P11.06	Automatic current limit threshold	Current-limit protection function detects output current during running, and compares it with the current-limit level defined by P11.06, if it exceeds the current-limit level, the VFD will run at stable frequency during accelerated running, or run in decreased frequency during constant-speed running; if it exceeds the current-limit level continuously, the VFD output frequency will drop continuously until reaching lower limit frequency. When the output	120.0%	◎
P11.07	Frequency drop rate during current limit		10.00 Hz/s	◎

Function code	Name	Description	Default	Modify
		current is detected to be lower than the current-limit level again, it will continue accelerated running. 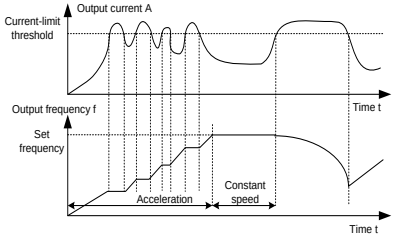 P11.06 setting range: 50.0–180.0% P11.07 setting range: 0.00–50.00Hz/s		
P11.08	VFD/motor OL/UL pre-alarm selection	0x000–0x1132 Ones place: 0: Motor OL/UL pre-alarm, relative to motor rated current. 1: VFD OL/UL pre-alarm, relative to the VFD rated current 2: Motor output torque OL/UL pre-alarm, relative to motor rated torque. Tens place: 0: The VFD continues to work for an OL/UL alarm. 1: The VFD continues to work for a UL alarm but stops running for an OL fault. 2: The VFD continues to work for an OL alarm but stops running for a UL fault. 3. The VFD stops running for an OL/UL alarm. Hundreds place: 0: Detect all the time. 1: Detect during constant speed running. Thousands place: VFD overload current reference selection 0: Related to current calibration coefficient 1: Irrelated to current calibration coefficient	0x0000	○
P11.09	Overload pre-alarm detection level	If the VFD or motor output current is larger than the overload pre-alarm detection level (P11.09), and the duration exceeds the overload pre-alarm detection time (P11.10), overload pre-alarm signal will be outputted.	Type G: 150% Type F: 120%	○
P11.10	Overload pre-alarm detection time		1.0s	○

Function code	Name	Description	Default	Modify
		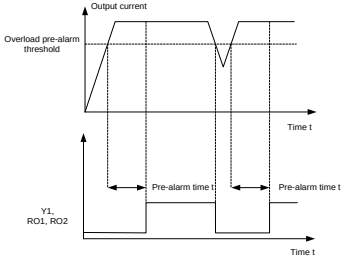 P11.09 setting range: P11.11–200.0% P11.10 setting range: 0.1–3600.0s		
P11.11	Underload pre-alarm detection threshold	Underload pre-alarm signal will be outputted if the output current of the VFD or motor is lower than underload pre-alarm detection level (P11.11), and the duration exceeds underload pre-alarm detection time (P11.12). P11.11 setting range: 0%–P11.09 Setting range of P11.12: 0.1–3600.0s	50%	○
P11.12	Underload pre-alarm detection time		1.0s	○
P11.13	Fault output terminal action upon fault occurring	Used to set the action of fault output terminals at undervoltage and fault reset. 0x00–0x11 Ones place: 0: Act upon an undervoltage fault 1: Do not act upon an undervoltage fault Tens place: 0: Act during automatic reset 1: Do not act during the automatic reset period	0x00	○
P11.14	Speed deviation detection value	0.0–50.0% Used to set the speed deviation detection value.	10.0%	○
P11.15	Speed deviation detection time	0.0–10.0s (No speed deviation protection for the value=0.0) Used to set the speed deviation detection time. **Note:** Speed deviation protection is invalid when P11.15=0.0.	2.0s	○

Function code	Name	Description	Default	Modify
		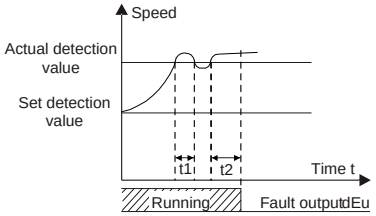 t1<t2, so the VFD continues running t2=P11.15 Setting range: 0.0–10.0s		
P11.16	Automatic frequency-reduction during voltage drop	0–1 0: Invalid 1: Valid	0	○
P11.17	Proportional coefficient of voltage regulator during undervoltage stall	This parameter is used to set the proportional coefficient of the bus voltage regulator during undervoltage stall. Setting range: 0–1000	100	○
P11.18	Proportional coefficient of voltage regulator during undervoltage stall	This parameter is used to set the integral coefficient of the bus voltage regulator during undervoltage stall. Setting range: 0–1000	40	○
P11.19	Proportional coefficient of current regulator during undervoltage stall	This parameter is used to set the proportional coefficient of the active current regulator during undervoltage stall. Setting range: 0–1000	25	○
P11.20	Integral coefficient of current regulator during undervoltage stall	This parameter is used to set the integral coefficient of the active current regulator during undervoltage stall. Setting range: 0–2000	150	○
P11.21	Proportional coefficient of voltage regulator during overvoltage stall	This parameter is used to set the proportional coefficient of the bus voltage regulator during overvoltage stall. Setting range: 0–1000	60	○
P11.22	Integral coefficient of voltage regulator during overvoltage stall	This parameter is used to set the integral coefficient of the bus voltage regulator during overvoltage stall. Setting range: 0–1000	10	○
P11.23	Proportional coefficient of current regulator	This parameter is used to set the proportional coefficient of the active current regulator during overvoltage stall.	60	○

Function code	Name	Description	Default	Modify
	during overvoltage stall	Setting range: 0–1000		
P11.24	Integral coefficient of current regulator during overvoltage stall	This parameter is used to set the integral coefficient of the active current regulator during overvoltage stall. Setting range: 0–2000	250	○
P11.25	Enable VFD overload integral	0: Disable 1: Enable When this parameter is set to 0, the overload timing value is reset to zero after the VFD is stopped. In this case, the determination of VFD overload takes more time, and therefore the effective protection over the VFD is weakened. When this parameter is set to 1, the overload timing value is not reset, and the overload timing value is accumulative. In this case, the determination of VFD overload takes less time, and therefore the protection over the VFD can be performed more quickly.	1	◎
P11.26	Reserved			
P11.27	VF oscillation control method	0x00–0x11 Ones place: 0: Method 1 1: Method 2 Tens place: 0: Reserved 1: Reserved	0x11	◎
P11.28	Software input phase loss detection method	0–1 0: Sine-wave detection 1: Square-wave detection	1	○
P11.29	Software input phase loss detection limit value	0–200.0V	40.0V	○
P11.30	Software input phase loss detection time	0–20.0s	2.0s	○
P11.31	Fault protection selection 1	0x0000–0x3313 LED ones place: Motor overload 0: Coast to stop 1: Stop according to the stop mode 2: Pre-alarm and run 3: Keep running LED tens place: VFD overload 0: Coast to stop	0x0000	○

Function code	Name	Description	Default	Modify
		1: Stop according to the stop mode LED hundreds place: Input phase loss (same as that for ones place) LED thousands place: Output phase loss on output side (same as that for ones place)		
P11.32	Fault protection selection 2	0x0000–0x3300 LED ones place: Rectifier module overheating 0: Coast to stop LED tens place: Inverter module overheat (same as that for ones place) LED hundreds place: External fault 0: Coast to stop 1: Stop according to the stop mode 2: Pre-alarm and run 3: Keep running LED thousands place: RS485 communication fault (same as that for hundreds place)	0x0000	○
P11.33	Fault protection selection 3	0x0000–0x3100 LED ones place: Current detection fault 0: Coast to stop LED tens place: Motor autotuning fault (same as that for ones place) LED hundreds place: EEPROM operation fault 0: Coast to stop 1: Stop according to the stop mode LED thousands place: PID feedback offline 0: Coast to stop 1: Stop according to the stop mode 2: Pre-alarm and run 3: Keep running	0x0000	○
P11.34	Fault protection selection 4	0x0000–0x1311 Ones place: Reserved 0: Reserved 1: Reserved Tens place: Running time reached (same as that for ones place) 0: Coast to stop 1: Stop according to the stop mode Hundreds place: Electronic overload 0: Coast to stop 1: Stop according to the stop mode 2: Pre-alarm and run 3: Keep running	0x0000	○

Function code	Name	Description	Default	Modify
		Thousands place: Keypad communication fault (same as that for ones place)		
P11.35	Fault protection selection 5	0x0000–0x0300 Ones place: Keypad upload fault 0: Coast to stop Tens place: Keypad download fault (same as that for ones place) Hundreds place: DP communication fault 0: Coast to stop 1: Stop according to the stop mode 2: Pre-alarm and run 3: Keep running Thousands place: Reserved	0x0000	○
P11.36	Fault protection selection 6	0x0000–0x3003 Ones place: CANopen communication fault 0: Coast to stop 1: Stop according to the stop mode 2: Pre-alarm and run 3: Keep running Tens place: To-ground short-circuit fault 1 0: Coast to stop Hundreds place: To-ground short-circuit fault 2 (same as that for tens place) Thousands place: Speed deviation fault (same as that for ones place)	0x0000	○
P11.37	Fault protection selection 7	0x0000–0x0011 Ones place: Mal-adjustment fault 0: Coast to stop 1: Stop according to the stop mode Tens place: Electronic underload fault (same as that for ones place) Hundreds place: Reserved Thousands place: Reserved	0x0000	○
P11.38	Fault protection selection 8	Reserved		
P11.39	Fault protection selection 9	Reserved		
P11.40	Fault protection selection 10	Reserved		
P11.41	Fault protection selection 11	Reserved		
P11.42	Fault protection selection 12	0x0000–0x3303 Ones place: Duplicate expansion card type 0: Coast to stop 1: Stop according to the stop mode	0x0000	○

Function code	Name	Description	Default	Modify
		2: Pre-alarm and run 3: Keep running Tens place: Reserved Hundreds place: PROFINET communication timeout fault (same as that for ones place) Thousands place: CAN communication fault (same as that for ones place)		
P11.43	Fault protection selection 13	0x0000–0x0333 Ones place: Motor overheating 0: Coast to stop 1: Stop according to the stop mode Tens place: Failed to identify the expansion card in card slot 1 0: Coast to stop 1: Stop according to the stop mode 2: Pre-alarm and run 3: Keep running Hundreds place: Failed to identify the expansion card in card slot 2 (same as that for tens place) Thousands place: Reserved	0x0000	○
P11.44	Fault protection selection 14	0x0000–0x0033 Ones place: Communication timeout of expansion card at card slot 1 0: Coast to stop 1: Stop according to the stop mode 2: Pre-alarm and run 3: Keep running Tens place: Communication timeout of expansion card at card slot 2 (same as that for ones place) Hundreds place: Reserved Thousands place: Reserved	0x0000	○
P11.45	Fault protection selection 15	0x0000–0x0300 Ones place: Reserved Tens place: Reserved Hundreds place: CAN slave fault in master/slave synchrization 0: Coast to stop 1: Stop according to the stop mode 2: Pre-alarm and run 3: Keep running Thousands place: Reserved	0x0000	○
P11.46	Fault protection	0x0000–0x3300	0x0000	○

Function code	Name	Description	Default	Modify
	selection 16	Ones place: Reserved Tens place: Reserved Hundreds place: Freezing fault 0: Coast to stop 1: Stop according to the stop mode 2: Pre-alarm and run 3: Keep running Thousands place: Stalling fault (same as that for hundreds place)		
P11.47	Fault protection selection 17	0x0000–0x0003 Ones place: Dry pumping 0: Coast to stop 1: Stop according to the stop mode 2: Pre-alarm and run 3: Keep running Tens place: Reserved Hundreds place: Reserved Thousands place: Reserved	0x0000	○
P11.48	Fault protection selection 18	Reserved		
P11.49	Fault protection selection 19	Reserved		
P11.50	Fault protection selection 20	Reserved		
P11.51	Output frequency selection for running with pre-alarm	0x0000–0x0004 Ones place: 0: Run at the present running frequency 1: Run at the frequency set through keypad 2: Run at the upper limit frequency 3: Run at the lower limit frequency 4: Run at the backup frequency upon exceptions	0x0000	○
P11.52	Backup frequency upon exceptions	0.00 Hz–P00.03(Max. output frequency)	0	○

P12 group—Parameters of motor 2

Function code	Name	Description	Default	Modify
P12.00	Type of motor 2	0: Asynchronous motor (AM) 1: Synchronous motor (SM)	0	◎
P12.01	Rated power of AM 2	0.1–3000.0kW	Depends on model	◎

Function code	Name	Description	Default	Modify
P12.02	Rated frequency of AM 2	0.01Hz–P00.03(Max. output frequency)	50.00Hz	◎
P12.03	Rated speed of AM 2	1–60000rpm	Depends on model	◎
P12.04	Rated voltage of AM 2	0–1200V	Depends on model	◎
P12.05	Rated current of AM 2	0.8–6000.0A	Depends on model	◎
P12.06	Stator resistance of AM 2	0.001–65.535Ω	Depends on model	○
P12.07	Rotor resistance of AM 2	0.001–65.535Ω	Depends on model	○
P12.08	Leakage inductance of AM 2	0.1–6553.5mH	Depends on model	○
P12.09	Mutual inductance of AM 2	0.1–6553.5mH	Depends on model	○
P12.10	No-load current of AM 2	0.1–6553.5A	Depends on model	○
P12.11	Magnetic saturation coefficient 1 of iron core of AM 2	0.0–100.0%	80%	○
P12.12	Magnetic saturation coefficient 2 of iron core of AM 2	0.0–100.0%	68%	○
P12.13	Magnetic saturation coefficient 3 of iron core of AM 2	0.0–100.0%	57%	○
P12.14	Magnetic saturation coefficient 4 of iron core of AM 2	0.0–100.0%	40%	○
P12.15	Rated power of SM 2	0.1–3000.0kW	Depends on model	◎
P12.16	Rated frequency of SM 2	0.01Hz–P00.03(Max. output frequency)	50.00Hz	◎
P12.17	Number of pole pairs of SM 2	1–128	2	◎
P12.18	Rated voltage of SM 2	0–1200V	Depends on model	◎
P12.19	Rated current of SM 2	0.8–6000.0A	Depends on model	◎

Function code	Name	Description	Default	Modify
P12.20	Stator resistance of SM 2	0.001–65.535Ω	Depends on model	○
P12.21	Direct-axis inductance of SM 2	0.01–655.35mH	Depends on model	○
P12.22	Quadrature-axis inductance of SM 2	0.01–655.35mH	Depends on model	○
P12.23	Counter-emf constant of SM 2	0–10000V	300	○
P12.24–P12.25	Reserved			
P12.26	Overload protection of motor 2	0: No protection 1: Common motor (with low-speed compensation) 2: Frequency-variable motor (without low-speed compensation)	2	◎
P12.27	Overload protection coefficient of motor 2	Motor overload multiples M=Iout/(In*K) In is rated motor current, Iout is VFD output current, K is motor overload protection coefficient. A smaller value of "K" indicates a bigger value of "M". When M=116%, protection is performed after motor overload lasts for 1 hour; when M=200%, protection is performed after motor overload lasts for 60 seconds; and when M≥400%, protection is performed immediately. 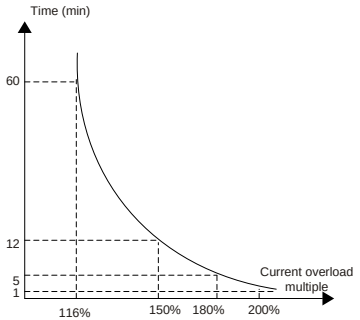 Setting range: 20.0%–120.0%	100.0%	○
P12.28	Power display calibration coefficient of motor 2	0.00–3.00	1.00	○

Function code	Name	Description	Default	Modify
P12.29	Parameter display of motor 2	0: Display by motor type. In this mode, only parameters related to the present motor type are displayed. 1: Display all. In this mode, all the motor parameters are displayed.	0	○
P12.30	System inertia of motor 2	0–30.000kgm^2	0.000	○

P13 group—SM control

Function code	Name	Description	Default	Modify
P13.00	SM injected-current decrease ratio	Used to set the reduction rate of the input reactive current. When the active current of the synchronous motor increases to some extent, the input reactive current can be reduced to improve the power factor of the motor. Setting range: 0.0%–100.0% (of the motor rated current)	80.0%	○
P13.01	Detection mode of initial pole	0: No detection 1: High-frequency superposition 2: Pulse superposition	0	◎
P13.02	Pull-in current 1	Pull-in current is the pole position orientation current; pull-in current 1 is valid within the lower limit of pull-in current switch-over frequency threshold. If you need to increase the start torque, increase the value of this function parameter properly. Setting range: 0.0%–100.0% (of the motor rated current)	20.0%	○
P13.03	Pull-in current 2	Pull-in current is the pole position orientation current; pull-in current 2 is valid within the lower limit of pull-in current switch-over frequency threshold. You do not need to change the value in most cases. Setting range: 0.0%–100.0% (of the motor rated current)	10.0%	○
P13.04	Pull-in current switchover frequency	0.00Hz–P00.03(Max. frequency)	10.00Hz	○
P13.05	Reserved			
P13.06	High-frequency superposition	Used to set the pulse current threshold when the initial magnetic pole position is	100.0%	◎

Function code	Name	Description	Default	Modify
	voltage	detected in the pulse mode, The value is a percentage in relative to the rated current of the motor. Setting range: 0.0–300.0% (of the motor rated voltage)		
P13.07	Reserved			
P13.08	Control parameter 1	0x0000–0xFFFF	0x0000	○
P13.09	Control parameter 2	Used to set the frequency threshold for enabling the counter-electromotive force phase-locked loop in SVC 0. When the running frequency is lower than the value of the function code, the phase-locked loop is disabled; and when the running frequency is higher than that, the phase-locked loop is enabled. Setting range: 0–655.35	2.00	○
P13.10	Reserved			
P13.11	Maladjustment detection time	Used to adjust the responsiveness of anti-maladjustment function. If the load inertia is large, increase the value of this parameter properly, however, the responsiveness may slow down accordingly. Setting range: 0.0–10.0s	0.5s	○
P13.12	High-frequency compensation coefficient of SM	Valid when the motor speed exceeds the rated speed. If oscillation occurred to the motor, adjust this parameter properly. Setting range: 0.0–100.0%	0.0%	○
P13.13	High-frequency current-loop	0–300.0%	20.0%	◎

P14 group—Serial communication

Function code	Name	Description	Default	Modify
P14.00	Local communication address	Setting range: 1–247 When the master writes the slave communication address to 0 indicating a broadcast address in a frame, all the salves on the Modbus bus receive the frame but do not respond to it. The communication addresses on the communication network are unique, which is the basis of the point-to-point communication.	1	○

Function code	Name	Description	Default	Modify
		Note: The communication address of a slave cannot be set to 0.		
P14.01	Communication baud rate	The function code is used to set the rate of data transmission between the upper computer and the VFD. 0: 1200BPS 1: 2400BPS 2: 4800BPS 3: 9600BPS 4: 19200BPS 5: 38400BPS 6: 57600BPS 7: 115200BPS **Note:** The baud rate set on the VFD must be consistent with that on the upper computer. Otherwise, the communication fails. A greater baud rate indicates faster communication.	4	○
P14.02	Data bit check	The data format set on the VFD must be consistent with that on the upper computer. Otherwise, the communication fails. 0: No check (N, 8, 1) for RTU 1: Even check (E, 8, 1) for RTU 2: Odd check (O, 8, 1) for RTU 3: No check (N, 8, 2) for RTU 4: Even check (E, 8, 2) for RTU 5: Odd check (O, 8, 2) for RTU	1	○
P14.03	Communication response delay	0–200ms The function code indicates the communication response delay, that is, the interval from when the VFD completes receiving data to when it sends response data to the upper computer. If the response delay is shorter than the rectifier processing time, the rectifier sends response data to the upper computer after processing data. If the delay is longer than the rectifier processing time, the rectifier does not send response data to the upper computer until the delay is reached although data has been processed.	5ms	○
P14.04	Communication timeout time	0.0 (invalid)–60.0s When the function code is set to 0.0, the communication timeout time is invalid. When the function code is set to a non-zero	0.0s	○

Function code	Name	Description	Default	Modify
		value, the system reports the "485 communication fault" (CE) if the communication interval exceeds the value. In general, the function code is set to 0.0. When continuous communication is required, you can set the function code to monitor communication status.		
P14.05	Transmission error processing	0: Report an alarm and coast to stop 1: Keep running without reporting an alarm 2: Stop according to the stop mode without generating alarms (only in the communication-based control mode) 3: Stop according to the stop mode without generating alarms (in all control modes)	0	○
P14.06	Communication processing action	0x00–0x11 Ones place: 0: Respond to write operations 1: Not respond to write operations Tens place: 0: Communication password protection is invalid. 1: Communication password protection is valid.	0x000	○
P14.07–P14.09	Reserved			
P14.10	Remote upgrade	0: Disable 1: Enable	0	◎
P14.11	Remote upgrade software version	1.00–655.35		●

P15 group—Functions of communication expansion card 1

Function code	Name	Description	Default	Modify
P15.00–P15.27	See the operation manual of communication expansion card for details			
P15.28	Master/slave CAN communication address	0–127	1	◎
P15.29	Master/slave CAN communication baud rate	0: 50Kbps 1: 100Kbps 2: 125Kbps 3: 250Kbps 4: 500Kbps	2	◎

Function code	Name	Description	Default	Modify
		5: 1M bps		
P15.30	Master/slave CAN communication timeout period	0.0 (invalid)–300.0s	0.0s	○
P15.31–P15.69	See the operation manual of communication expansion card for details			

P16 group—Functions of communication expansion card 2

Function code	Name	Description	Default	Modify
P16.00–P16.23	See the operation manual of communication expansion card for details			
P16.24	Time to identify expansion card in card slot 1	0.0–600.0s The value 0.0 indicates that identification fault will not be detected.	0.0s	○
P16.25	Time to identify expansion card in card slot 2	0.0–600.0s The value 0.0 indicates that identification fault will not be detected.	0.0s	○
P16.26	Time to identify expansion card in card slot 3	0.0–600.0s The value 0.0 indicates that identification fault will not be detected.	0.0s	○
P16.27	Communication timeout period of card at slot 1	0.0–600.0s The value 0.0 indicates offline fault will not be detected.	0.0s	○
P16.28	Communication timeout period of card at slot 2	0.0–600.0s The value 0.0 indicates offline fault will not be detected.	0.0s	○
P16.29	Communication timeout period of card at slot 3	0.0–600.0s The value 0.0 indicates offline fault will not be detected.	0.0s	○
P16.30–P16.69	See the operation manual of communication expansion card for details			

P17 group—Status viewing

Function code	Name	Description	Default	Modify
P17.00	Set frequency	Displays the present set frequency of the VFD. Range: 0.00Hz–P00.03	50.00Hz	●
P17.01	Output frequency	Displays the present output frequency of the VFD. Range: 0.00Hz–P00.03	0.00Hz	●
P17.02	Ramp reference frequency	Displays the present ramp reference frequency of the VFD. Range: 0.00Hz–P00.03	0.00Hz	●

Function code	Name	Description	Default	Modify
P17.03	Output voltage	Displays the present output voltage of the VFD. Range: 0–1200V	0V	●
P17.04	Output current	Displays the valid value of current output current of the VFD. Range: 0.0–5000.0A	0.0A	●
P17.05	Motor rotation speed	Displays the current motor speed. Range: 0–65535RPM	0 RPM	●
P17.06	Torque current	Displays the present torque current of the VFD. Range: -3000.0–3000.0A	0.0A	●
P17.07	Exciting current	Displays the present exciting current of the VFD. Range: -3000.0–3000.0A	0.0A	●
P17.08	Motor power	Displays the present motor power; 100% relative to the rated motor power. The positive value is the motoring state while the negative value is the generating state. Range: -300.0–300.0% (relative to the rated motor power)	0.0%	●
P17.09	Motor output torque	Displays the present output torque of the VFD; 100% relative to the rated motor torque. During forward running, the positive value is the motoring state while the negative value is generating state. During reverse running, the positive value is the generating state while the negative value is the motoring state. Range: -250.0–250.0%	0.0%	●
P17.10	Estimated motor frequency	Displays the estimated motor rotor frequency under the open-loop vector condition. Range: 0.00–P00.03	0.00Hz	●
P17.11	DC bus voltage	Displays the present DC bus voltage of the VFD. Range: 0.0–2000.0 V	0V	●
P17.12	Digital input terminal status	Displays the present digital input terminal state of the VFD. 0x0000–0x003F Corresponds to HDIA, S4, S3, S2 and S1 respectively.	0x0000	●
P17.13	Digital output terminal status	Displays the present digital output terminal state of the VFD. 0x0000–0x000F Corresponding to Reserved, RO1, Reserved and Y1 respectively.	0x0000	●

Function code	Name	Description	Default	Modify
P17.14	Digital adjustment value	Displays the adjustment on the VFD through the UP/DOWN terminal. Range: 0.00Hz–P00.03	0.00Hz	●
P17.15	Torque reference value	Relative to the percentage of the rated torque of the present motor, displaying the torque reference. Range: -300.0%–300.0% (of the motor rated current)	20.0%	●
P17.16	Linear speed	0–65535	0	●
P17.17	Reserved			
P17.18	Count value	0–65535	0	●
P17.19	AI1 input voltage	Displays the AI1 input signal. Range: 0.00–10.00V	0.00V	●
P17.20	AI2 input voltage	Displays the AI2 input signal. Range: -10.00V–10.00V	0.00V	●
P17.21	HDIA input frequency	Display HDIA input frequency. Range: 0.000–50.000kHz	0.000 kHz	●
P17.22	Reserved			
P17.23	PID reference value	Displays the PID reference value. Range: -100.0–100.0%	0.0%	●
P17.24	PID feedback value	Displays the PID feedback value. Range: -100.0–100.0%	0.0%	●
P17.25	Motor power factor	Displays the power factor of the current motor. Range: -1.00–1.00	1.00	●
P17.26	Duration of this run	Displays the duration of this run of the VFD. Range: 0–65535min	0m	●
P17.27	Present step of simple PLC	Used to display the present step of the simple PLC function. Range: 0–15	0	●
P17.28	Motor ASR controller output	Displays the ASR controller output value under the vector control mode, relative to the percentage of rated motor torque. Range: -300.0%–300.0% (of the motor rated current)	0.0%	●
P17.29	Pole angle of open-loop SM	Displays the initial identification angle of SM. Range: 0.0–360.0	0.0	●
P17.30	Phase compensation of SM	Displays the phase compensation of SM. Range: -180.0–180.0	0.0	●

Function code	Name	Description	Default	Modify
P17.31	High-frequency superposition current of SM	0.0%–200.0% (of the motor rated current)	0.0	●
P17.32	Motor flux linkage	0.0%–200.0%	0.0%	●
P17.33	Exciting current reference	Displays the exciting current reference value under the vector control mode. Range: -3000.0–3000.0A	0.0A	●
P17.34	Torque current reference	Displays the torque current reference value under the vector control mode. Range: -3000.0–3000.0A	0.0A	●
P17.35	AC incoming current	Displays the valid value of incoming current on AC side. Range: 0.0–5000.0A	0.0A	●
P17.36	Actual output torque	Displays the actual output torque value of the VFD. During forward running, the positive value is the motoring state while the negative value is generating state. During reverse running, the positive value is the generating state while the negative value is the motoring state. Range: -3000.0N·m – 3000.0 N·m	0.0 N·m	●
P17.37	Motor overload count value	0–65535	0	●
P17.38	Process PID output	-100.0%–100.0%	0.00%	●
P17.39	Function codes in parameter download error	0.00–99.99	0.00	●
P17.40	Motor control mode	0x000–0x123 Ones place: Control mode 0: Vector 0 1: Vector 1 2: VF control 3: Closed-loop vector control Tens place: Control status 0: Speed control 1: Torque control 2: Position control Hundreds place: Motor number 0: Motor 1 1: Motor 2	0x000	●
P17.41	Electromotive torque upper limit	0.0%–300.0% (of the motor rated current)	180.0%	●
P17.42	Braking torque upper limit	0.0%–300.0% (of the motor rated current)	180.0%	●
P17.43	Forward rotation	0.00–P00.03	0.00Hz	●

Function code	Name	Description	Default	Modify
	upper-limit frequency in torque control			
P17.44	Reverse rotation upper-limit frequency in torque control	0.00–P00.03	0.00Hz	●
P17.45	Inertia compensation torque	-100.0%–100.0%	0.0%	●
P17.46	Friction compensation torque	-100.0%–100.0%	0.0%	●
P17.47	Motor pole pairs	0–65535	Depends on model	●
P17.48	VFD overload count value	0–65535	0	●
P17.49	Frequency set by A source	0.00–P00.03	0.00Hz	●
P17.50	Frequency set by B source	0.00–P00.03	0.00Hz	●
P17.51	PID proportional output	-100.0%–100.0%	0.00%	●
P17.52	PID integral output	-100.0%–100.0%	0.00%	●
P17.53	PID differential output	-100.0%–100.0%	0.00%	●
P17.54	PID present proportional gain	0.00–100.00	0.00%	●
P17.55	PID present integral gain	0.00–10.00s	0.00%	●
P17.56	PID present differential time	0.00–10.00s	0.00%	●
P17.57–P17.58	Reserved			
P17.59	Keypad analog voltage (for small power models)	0.00–10.00V	0.00V	●

P19 group—Expansion card status viewing

Function code	Name	Description	Default	Modify
P19.00	Expansion card type of card slot 1	0–65535 0: No card 1: Reserved 2: I/O card	0	●
P19.01	Expansion card type of card slot 2		0	●

Function code	Name	Description	Default	Modify
P19.02	Reserved	3: Reserved 4: Reserved 5: Ethernet 6: DP 7: Bluetooth card 8: Reserved 9: CANopen communication card 10: WiFi card 11: PROFINET 12: Reserved 13: Reserved 14: Reserved 15: CAN master/slave communication card 16: Modbus communication card 17: Reserved 18: BACnet communication card 19: Reserved 25: Water supply card		
P19.03	Software version of card at slot 1	0.00–655.35	0.00	●
P19.04	Software version of card at slot 2	0.00–655.35	0.00	●
P19.05	Reserved			
P19.06	Terminal input status of I/O card	0–0xFFFF	0	●
P19.07	Terminal output status of I/O card	0–0xFFFF	0	●
P19.08	Reserved			
P19.09	AI3 of I/O card Input voltage	0.00–10.00V	0.00V	●

P23 group—Vector control of motor 2

Function code	Name	Description	Default	Modify
P23.00	Speed-loop proportional gain 1	The parameters P23.00–P23.05 are applicable only to vector control mode. Below the switching frequency 1 (P23.02), the speed-loop PI parameters are: P23.00 and P23.01. Above the switching frequency 2 (P23.05), the speed-loop PI parameters are: P23.03 and P23.04. PI parameters are obtained according to the linear change of two groups of parameters. See the following figure:	20.0	○
P23.01	Speed-loop integral time 1		0.200s	○
P23.02	Low-point frequency for switching		5.00Hz	○
P23.03	Speed-loop proportional gain 2		20.0	○

Function code	Name	Description	Default	Modify
P23.04	Speed-loop integral time 2	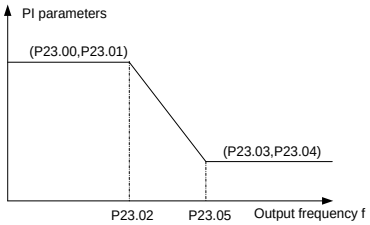	0.200s	○
P23.05	High-point frequency for switching	The speed loop dynamic response characteristics of vector control can be adjusted by setting the proportional coefficient and integral time of speed regulator. Increasing proportional gain or reducing integral time can accelerate dynamic response of speed loop; however, if the proportional gain is too large or integral time is too small, system oscillation and overshoot may occur; if proportional gain is too small, stable oscillation or speed offset may occur. PI parameters have a close relationship with the inertia of the system. Adjust PI parameters depending on different loads to meet various demands. P23.00 setting range: 0.0–200.0 P23.01 setting range: 0.000–10.000s P23.02 setting range: 0.00Hz–P23.05 P23.03 setting range: 0.0–200.0 P23.04 setting range: 0.000–10.000s P23.05 setting range: P23.02–P00.03 (Max. output frequency)	10.00Hz	○
P23.06	Speed-loop output filter	0–8 (corresponding to $0–2^8$/10ms)	0	○
P23.07	Electromotive slip compensation coefficient of vector control	Slip compensation coefficient is used to adjust the slip frequency of the vector control and improve the speed control accuracy of the system. Adjusting the parameter properly can control the speed steady-state error. Setting range: 50–200%	100%	○
P23.08	Braking slip compensation coefficient of vector control		100%	○
P23.09	Current-loop proportional coefficient P	**Note:** 1. The two function codes impact the dynamic response speed and control	1000	○

Function code	Name	Description	Default	Modify
P23.10	Current-loop integral coefficient I	accuracy of the system. Generally, you do not need to modify the two function codes. 2. Applicable to SVC mode 0 (P00.00=0) 3. The values of the two function codes are updated automatically after SM parameter autotuning is completed. Setting range: 0–65535	1000	○
P23.11	Speed-loop differential gain	0.00–10.00s	0.00s	○
P23.12	High-frequency current-loop proportional coefficient	In the vector control mode (P00.00=3), when the frequency is lower than the current-loop high-frequency switching threshold (P23.14), the current-loop PI parameters are P23.09 and P23.10; and when the frequency is higher than the current-loop high-frequency switching threshold, the current-loop PI parameters are P23.12 and P23.13. P23.12 setting range: 0–65535 P23.13 setting range: 0–65535 P23.14 setting range: 0.0–100.0% (of the max. frequency)	1000	○
P23.13	High-frequency current-loop integral coefficient		1000	○
P23.14	Current-loop high-frequency switching threshold		100.0%	○

P25 group—Input functions of expansion I/O card

Function code	Name	Description	Default	Modify
P25.00	Reserved			
P25.01	Function of S5	Same as P05	0	◎
P25.02	Function of S6		0	◎
P25.03	Function of S7		0	◎
P25.04	Function of S8		0	◎
P25.05	Function of S9		0	◎
P25.06	Function of S10		0	◎
P25.07	Reserved		0	◎
P25.08	Expansion card input terminal polarity	0x00–0x7F	0x00	○
P25.09	Expansion card virtual terminal setting	0x000–0x7F (0: Disable. 1: Enable) BIT0: S5 virtual terminal BIT1: S6 virtual terminal	0x00	◎

Function code	Name	Description	Default	Modify
		BIT2: S7 virtual terminal BIT3: S8 virtual terminal BIT4: S9 virtual terminal BIT5: S10 virtual terminal BIT6: Reserved		
P25.10	Reserved	Used to specify the delay time corresponding to the electrical level changes when the programmable input terminals switch on or switch off. 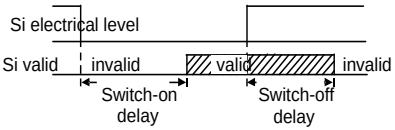 Setting range: 0.000–50.000s	0.000s	○
P25.11	Reserved		0.000s	○
P25.12	S5 switch-on delay		0.000s	○
P25.13	S5 switch-off delay		0.000s	○
P25.14	S6 switch-on delay		0.000s	○
P25.15	S6 switch-off delay		0.000s	○
P25.16	S7 switch-on delay		0.000s	○
P25.17	S7 switch-off delay		0.000s	○
P25.18	S8 switch-on delay		0.000s	○
P25.19	S8 switch-off delay		0.000s	○
P25.20	S9 switch-on delay		0.000s	○
P25.21	S9 switch-off delay		0.000s	○
P25.22	S10 switch-on delay		0.000s	○
P25.23	S10 switch-off delay		0.000s	○
P25.24	AI3 lower limit	Used to define the relationship between the analog input voltage and its corresponding setting. When the analog input voltage exceeds the range from the upper limit to the lower limit, the upper limit or lower limit is used. When the analog input is current input, 0mA–20mA current corresponds to 0V–10V voltage. In different applications, 100.0% of the analog setting corresponds to different nominal values. See the descriptions of each application section for details.	0.00V	○
P25.25	Corresponding setting of AI3 lower limit		0.0%	○
P25.26	AI3 upper limit		10.00V	○
P25.27	Corresponding setting of AI3 upper limit		100.0%	○
P25.28	AI3 input filter time		0.030s	○
P25.29–P25.39	Reserved			

Function code	Name	Description	Default	Modify
		The following figure illustrates the cases of several settings: 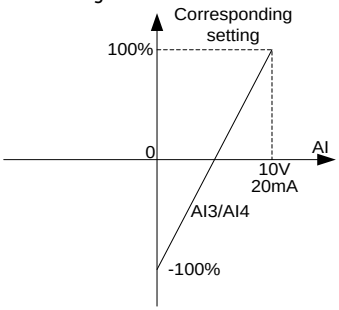 Input filter time: to adjust the sensitivity of analog input. Increasing the value properly can enhance analog input anti-interference but may reduce the sensitivity of analog input. **Note:** AI3 can support 0–10V/0–20mA input. When AI3 select 0–20mA input, the corresponding voltage of 20mA is 10V. Setting range of P25.24: 0.00V–P25.26 Setting range of P25.25: -300.0% –300.0% Setting range of P25.26: P25.24–10.00V Setting range of P25.27: -300.0% –300.0% Setting range of P25.28: 0.000s–10.000s		
P25.40	AI3 input signal type selection	Range: 0–1 0: Voltage 1: Current	0	○
P25.41	Reserved			

P26 group—Output functions of expansion I/O card

Function code	Name	Description	Default	Modify
P26.00	Reserved			
P26.01	Reserved	Same as the description for P06.01		
P26.02	Y2 output		0	○
P26.03	Reserved			
P26.04	RO3 output		0	○
P26.05	RO4 output		0	○
P26.06	RO5 output		0	○

Function code	Name	Description	Default	Modify
P26.07	RO6 output		0	○
P26.08	RO7 output		0	○
P26.09	RO8 output		0	○
P26.10	RO9 output		0	○
P26.11	RO10 output		0	○
P26.12	Expansion card output terminal polarity	0x0000–0x7FF RO10, RO9...RO3, Reserved, Reserved, Y2 in sequence	0x0000	○
P26.13–P26.14	Reserved			
P26.15	Y2 switch-on delay		0.000s	○
P26.16	Y2 switch-off delay		0.000s	○
P26.17–P26.18	Reserved		0.000s	○
P26.19	RO3 switch-on delay	Used to specify the delay time corresponding to the electrical level changes when the programmable output terminals switch on or switch off. 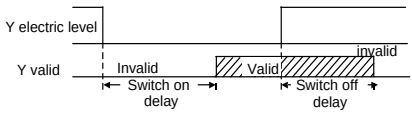 Setting range: 0.000–50.000s	0.000s	○
P26.20	RO3 switch-off delay		0.000s	○
P26.21	RO4 switch-on delay		0.000s	○
P26.22	RO4 switch-off delay		0.000s	○
P26.23	RO5 switch-on delay		0.000s	○
P26.24	RO5 switch-off delay		0.000s	○
P26.25	RO6 switch-on delay		0.000s	○
P26.26	RO6 switch-off delay		0.000s	○
P26.27	RO7 switch-on delay		0.000s	○
P26.28	RO7 switch-off delay		0.000s	○
P26.29	RO8 switch-on delay		0.000s	○
P26.30	RO8 switch-off delay		0.000s	○

Function code	Name	Description	Default	Modify
P26.31	RO9 switch-on delay		0.000s	○
P26.32	RO9 switch-off delay		0.000s	○
P26.33	RO10 switch-on delay		0.000s	○
P26.34	RO10 switch-off delay		0.000s	○
P26.35	AO2 output	Same as the description for P06.14	0	○
P26.36	AO3 output		0	○
P26.37	Reserved			
P26.38	AO2 output lower limit	Used to define the relationship between the output value and analog output. When the output value exceeds the allowed range, the output uses the lower limit or upper limit. When the analog output is current output, 1mA equals 0.5V. In different cases, the corresponding analog output of 100% of the output value is different. 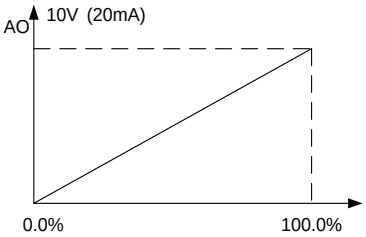 P26.38 setting range: -300.0%–P26.40 Setting range of P26.39: 0.00V–10.00V P26.40 setting range: P26.38–100.0% P26.41 setting range: 0.00V–10.00V P26.42 setting range: 0.000s–10.000s P26.43 setting range: -300.0%–P26.45 P26.44 setting range: 0.00V–10.00V P26.45 setting range: P26.43––300.0% P26.46 setting range: 0.00V–10.00V P26.47 setting range: 0.000s–10.000s	0.0%	○
P26.39	AO2 output corresponding to lower limit		0.00V	○
P26.40	AO2 output upper limit		100.0%	○
P26.41	AO2 output corresponding to upper limit		10.00V	○
P26.42	AO2 output filter time		0.000s	○
P26.43	AO3 output lower limit		0.0%	○
P26.44	AO3 output corresponding to lower limit		0.00V	○
P26.45	AO3 output upper limit		100.0%	○
P26.46	AO3 output corresponding to upper limit		10.00V	○
P26.47	AO3 output filter time		0.000s	○

P28 group—Master/slave control

Function code	Name	Description	Default	Modify
P28.00	Master/slave mode	0: Master/slave control is invalid. 1: The local device is the master. 2: The local device is the slave.	0	◎
P28.01	Master/slave communication data selection	0: CAN 1: Reserved	0	◎
P28.02	Master/slave control mode	0x000–0x112 Ones place: Master/slave running mode selection 0: Master/slave mode 0 The master and slave use speed control, with power balanced through droop control. 1: Master/slave mode 1 (The master and slave must be in the same type of vector control. When the master is in speed control, the slave is forced into torque control.) 2: Master/slave mode 2 The slave switches from speed mode (master/slave mode 0) to torque mode (master/slave mode 1) at a frequency point. Tens place: Slave start command source 0: Master 1: Determined by P00.01 Hundreds place: Whether to enable master/slave to send/receive data 0: Enable 1: Disable	0x001	◎
P28.03	Slave speed gain	0.0–500.0%	100.0%	○
P28.04	Slave torque gain	0.0–500.0%	100.0%	○
P28.05	Frequency point for switching between speed mode and torque mode in master/slave mode 2	0.00–10.00Hz	5.00Hz	○
P28.06	Number of slaves	0–15	1	◎

P89 group—HVAC status viewing

Function code	Name	Description	Default	Modify
P89.00	HVAC function status	0: Invalid 1: Valid	0	●
P89.01	Variable-frequency motor run sequence	1–8 The sequences 1–8 correspond to motors A–H. For fixed variable-frequency motors, the value is 255.	1	●
P89.02	Multi-motor validity status	0x00–0xFF Bit 0–Bit 7 correspond to motors A–H. 0: The corresponding motor is invalid and cannot be put into service. 1: The corresponding motor is valid and can be put into service.	0x00	●
P89.03	Power-frequency motor run status	0x00–0xFF Bit 0–Bit 7 correspond to motors A–H. 0: The corresponding motor stops. 1: The corresponding motor is running.	0x00	●
P89.04	SN of power-frequency motor to be polled	1–8	2	●
P89.05	Left time of power-frequency motor to be polled	0.00–600.00h	0.00h	●
P89.06	SN of variable-frequency motor to be polled	1–8	2	●
P89.07	Left time of variable-frequency motor to be polled	0.00–600.00h	0.00h	●
P89.08	PID1 status	Bit 0: Stopped Bit 1: Normal running Bit 2: Deadzone Bit 3: Sleep	0x0	●
P89.09	Present reference value of PID1	-100.0–100.0%	0.0%	●
P89.10	PID1 feedback value	-100.0–100.0%	0.0%	●
P89.11	PID1 deviation input	-100.0–100.0%	0.0%	●
P89.12	Proportional output value of PID1	-1000.0–1000.0%	0.0%	●

Function code	Name	Description	Default	Modify
P89.13	Integral output value of PID1	-100.00–100.00%	0.00%	●
P89.14	PID1 differential output	-1000.0–1000.0%	0.0%	●
P89.15	Comprehensive output of PID1	-100.00–100.00%	0.00%	●
P89.16	PID2 status	0: Stop 1: Normal running 2: Deadzone	1	●
P89.17	Present reference value of PID2	-100.0–100.0%	0.0%	●
P89.18	PID2 feedback value	-100.0–100.0%	0.0%	●
P89.19	PID2 deviation input	-100.0–100.0%	0.0%	●
P89.20	Proportional output value of PID2	-1000.0–1000.0%	0.0%	●
P89.21	Integral output value of PID2	-100.00–100.00%	0.00%	●
P89.22	PID2 differential output	-1000.0–1000.0%	0.0%	●
P89.23	Comprehensive output of PID2	-100.0–100.0%	0.0%	●
P89.24	Accumulative run time of motor A	0–65535h	0h	●
P89.25	Accumulative run time of motor B	0–65535h	0h	●
P89.26	Accumulative run time of motor C	0–65535h	0h	●
P89.27	Accumulative run time of motor D	0–65535h	0h	●
P89.28	Accumulative run time of motor E	0–65535h	0h	●
P89.29	Accumulative run time of motor F	0–65535h	0h	●
P89.30	Accumulative run time of motor G	0–65535h	0h	●
P89.31	Accumulative run time of motor H	0–65535h	0h	●
P89.32	AI/AO measured temperature	-20.0–200.0°C	0°C	●

P90 group—PID1 control

Function code	Name	Description	Default	Modify
P90.00	Unit selection	0: MPa 1: kPa 2: Pa 3: A 4: V 5: % 6: m/s 7: m/min 8: m/h 9: m^3/s 10: m^3/min 11: m^3/h 12: kg/s 13: kg/min 14: kg/h 15–21: Reserved	0	◎
P90.01	Number of decimal places	0–3	2	◎
P90.02	PID1 given max. value	0.00–30.00 It is displayed with two decimal places by default. If P90.01 is changed, the number of decimal places changes.	10.00	○
P90.03	PID1 reference upper limit	P90.04–P90.02	10.00	○
P90.04	PID1 reference lower limit	0.00–P90.03	0.00	○
P90.05	ACC/DEC time of PID1 reference value	0.0–1000.0s	0.0s	
P90.06	PID1 reference source 1	0: Keypad (P90.07) 1: AI1 2: AI2 3: AI3 4: HDIA 5: Reserved 6: Communication card	0	○
P90.07	PID1 reference value 1 through keypad	P90.04–P90.03	0.100	
P90.08	PID1 feedback source 1	0: Keypad (P90.09) 1: AI1 2: AI2 3: AI3 4: HDIA 5: Reserved	0	

Function code	Name	Description	Default	Modify
		6: Communication card		
P90.09	PID1 feedback value 1 through keypad	P90.04–P90.03	0.100	
P90.10	Gain of PID1 feedback source 1	0.000–3.000	1.000	○
P90.11	PID1 reference source 2	0: Keypad (P90.12) 1: AI1 2: AI2 3: AI3 4: HDIA 5: Reserved 6: Communication card	0	○
P90.12	PID1 reference value 2 through keypad	P90.04–P90.03	0.100	○
P90.13	PID1 feedback source 2	0: Keypad (P90.14) 1: AI1 2: AI2 3: AI3 4: HDIA 5: Reserved 6: Communication card	0	○
P90.14	PID1 feedback value 2 through keypad	P90.04–P90.03	0.100	○
P90.15	Gain of PID1 feedback source 2	0.000–3.000	1.000	○
P90.16	Feedback function combination	0: No combination, feedback source 1 1: Sum of feedback sources 1 and 2 1: Difference between feedback sources 1 and 2 3: Average of feedback sources 1 and 2 4: Minimum of feedback sources 1 and 2 5: Maximum of feedback sources 1 and 2 6: Min. negative difference or max. negative difference among multiple reference values When calculating the difference between reference source 1 and feedback source 1 and the difference between reference source 2 and feedback source 2, give priority to the condition in which the feedback is greater than the reference. If there are some feedback values that are	0	○

Function code	Name	Description	Default	Modify
		greater than the reference values, select the group with the max. negative difference as the PID reference and feedback. If all feedback values are less than the reference values, select the group with the min. positive difference as the PID reference and feedback. 7: Max. positive difference or min. negative difference among multiple reference values When calculating the difference between reference source 1 and feedback source 1 and the difference between reference source 2 and feedback source 2, give priority to the condition in which the feedback is less than the reference. If there are some feedback values that are less than the reference values, select the group with the max. positive difference as the PID reference and feedback. If all feedback values are greater than the reference values, select the group with the min. negative difference as the PID reference and feedback.		
P90.17	Feedback upper limit detection value	0–100.0%	100.0%	○
P90.18	Feedback lower limit detection value	0–100.0%	0.0%	○
P90.19	Feedback out-of-range detection time	0.0–3600.0s	1.0s	○
P90.20	PID1 feedback filter time	0.000–60.000s	0.000s	○
P90.21	PID1 deviation input limit value	0.0–100.0%	100.0%	○
P90.22	Output characteristics selection	0: PID output is positive. 1: PID output is negative.	0	○
P90.23	PID1 output gain	0.000–3.000	1.000	○
P90.24	PID1 output filter time	0.000–60.000s	0.100s	○
P90.25	PID1 output upper limit	P90.26–100.0%	100.0%	○
P90.26	PID1 output lower limit	-100.0%–P90.25	0.0%	○

Function code	Name	Description	Default	Modify
P90.27	Proportional gain	0.000–60.000	1.000	○
P90.28	Integral time	0.000–60.000s	5.000s	○
P90.29	Differential time	0.000–60.000s	0.000s	○
P90.30	Sampling period	0.001–60.000s	0.100s	○
P90.31	PID1 control deadzone	0.0–100.0%	0.0%	◎
P90.32	Deadzone delay	0.0–300.0s The PID suspends the regulation when the PID input deviation is kept for the deadzone retaining delay time.	1.0s	●
P90.33	Integral separation threshold	0.0–100.0%	100.0%	○
P90.34	Differential filter times	0–40	10	○
P90.35	Prior differential processing	0: Perform differential processing on feedback with priority 1: Perform differential processing on deviation with priority	0	○

P91 group—PID2 control

Function code	Name	Description	Default	Modify
P91.00	Unit selection	0: MPa 1: kPa 2: Pa 3: A 4: V 5: % 6: m/s 7: m/min 8: m/h 9: m^3/s 10: m^3/min 11: m^3/h 12: kg/s 13: kg/min 14: kg/h 15–21: Reserved	0	◎
P91.01	Number of decimal places	0–3	2	◎
P91.02	PID2 given max. value	0.00–30.00 It is displayed with two decimal places by default. If P91.01 is changed, the	10.00	○

Function code	Name	Description	Default	Modify
		number of decimal places changes.		
P91.03	PID2 reference upper limit	P91.04–P91.02	10.00	○
P91.04	PID2 reference lower limit	0.000–P91.03	0	○
P91.05	ACC/DEC time of PID2 reference value	0.0–1000.0s	0.0s	○
P91.06	PID2 reference source 1	0: Keypad (P91.07) 1: AI1 2: AI2 3: AI3 4: HDIA 5: Reserved 6: Communication card	0	○
P91.07	PID2 reference value 1 through keypad	P91.04–P91.03	0.100	○
P91.08	PID2 feedback source 1	0: Keypad (P91.09) 1: AI1 2: AI2 3: AI3 4: HDIA 5: Reserved 6: Communication card	0	○
P91.09	PID2 feedback value 1 through keypad	P91.04–P91.03	0.100	○
P91.10	Gain of PID2 feedback source 1	0.000–3.000	1.000	○
P91.11	PID2 startup feedback value	0.00–P91.02 It is displayed with three decimal places by default. If P91.01 is changed, the number of decimal places changes. When P91.15 is set to 1 or the enabling terminal is valid, if the output is positive, the feedback is less than the value of this function code; if the output is negative, the feedback is greater than the value of this function code. After the situation lasts for the time specified by P91.12, PID2 automatically starts.	10.00	○
P91.12	PID2 startup delay	0.0–300.0s	1.0s	○

Function code	Name	Description	Default	Modify
P91.13	PID2 stop feedback value	0.00–P91.02 It is displayed with three decimal places by default. If P91.01 is changed, the number of decimal places changes. If the output is positive, the feedback is greater than the value of this function code; if the output is negative, the feedback is less than the value of this function code. After the situation lasts for the time specified by P91.14, PID2 automatically stopts.	10.00	○
P91.14	PID2 stop delay	0.0–300.0s	1.0s	○
P91.15	Enabling PID2	0: Invalid 1: Valid	0	○
P91.16	Reserved			
P91.17	Feedback upper limit detection value	0–100.0%	100.0%	○
P91.18	Feedback lower limit detection value	0–100.0%	0.0%	○
P91.19	Feedback out-of-range detection time	0.0–3600.0s	1.0s	○
P91.20	PID2 feedback filter time	0.000–60.000s	0.000s	○
P91.21	PID2 deviation input limit value	0.0–100.0%	100.0%	○
P91.22	Output characteristics selection	0: PID output is positive. 1: PID output is negative.	0	○
P91.23	PID2 output gain	0.000–3.000	1.000	○
P91.24	PID2 output filter time	0.000–60.000s	0.000s	○
P91.25	PID2 output upper limit	P91.26–100.0%	100.0%	○
P91.26	PID2 output lower limit	-100.0–P91.25	0.0%	○
P91.27	Proportional gain	0.000–60.000	1.000	○
P91.28	Integral time	0.000–60.000s	5.000s	○
P91.29	Differential time	0.000–60.000s	0.000s	○
P91.30	Sampling period	0.001–60.000s	0.100s	○

Function code	Name	Description	Default	Modify
P91.31	PID2 control deadzone	0.0–100.0%	0.0%	◎
P91.32	Deadzone delay	0.0–300.0s The PID suspends the regulation when the PID input deviation is kept for the deadzone retaining delay time.	1.0s	○
P91.33	Integral separation threshold	0.0–200.0%	200.0%	○
P91.34	Differential filter times	0–40	10	○
P91.35	Prior differential processing	0: Perform differential processing on feedback with priority 1: Perform differential processing on deviation with priority	0	○

P92 group—Real-time clock and timer (available at use of LCD keypad)

Function code	Name	Description	Default	Modify
P92.00	Displaying year	2020–2099, YY	2020YY	●
P92.01	Displaying month and date	01.01–12.31, MMDD	01.01MMDD	●
P92.02	Displaying day of a week	1–7 1–7 correspond to Monday–Sunday.	1	●
P92.03	Displaying hour and minute	00.00–23.59, HHMM 00.00 is the earliest hour and time of a day, while 23.59 is the latest hour and time of a day.	00.00HHMM	●
P92.04	Setting working days	Bit 0–Bit 6 correspond to Monday–Sunday. Setting instances: Monday: 0x01 Wednesday: 0x04 From Monday to Friday: 0x1F From Saturday to Sunday: 0x60	0	○
P92.05	VFD startup hour and minute	00.00–23.59, HH.MM	00.00 HH.MM	○
P92.06	VFD startup second	00–59s	0s	○
P92.07	VFD stop hour and minute	00.00–23.59, HH.MM	00.00 HH.MM	○
P92.08	VFD stop second	00–59s	0s	○
P92.09	Clock fault	0: Disable 1: Enable	0	○
P92.10	Actual second	00–59s	0s	●

P93 group—Fire control

Function code	Name	Description	Default	Modify
P93.00	Fire mode	0: Invalid 1: Fire mode 1 2: Fire mode 2 When P93.00=0, the fire mode is invalid, the VFD runs in normal mode and it stops if suffering a fault. When P93.00 is a non-zero value and the fire signal is activated, the fire mode is valid, and the VFD runs at the speed specified by P93.01. If fire mode 1 is selected, the VFD always runs except it is damaged. If fire mode 2 is selected, the VFD always runs except it stops upon the following faults: OUT1, OUT2, OUT3, OC1, OC2, OC3, OV1, OV2, OV3, and SPO.	0	◎
P93.01	Running frequency in fire mode	0.00Hz–P00.03 (Max. output frequency)	50.00Hz	○
P93.02	Motor running direction in fire mode	0: Run at the default direction. 1: Run at the opposite direction.	0	○
P93.03	Fire mode flag	0–1 If the fire mode duration reaches 5 minutes, this flag is set to 1, and no warranty repair is granted.	0	●
P93.04	Actual month and date when fire activated	01.01–12.31	00.00	●
P93.05	Actual time when fire activated	00.00–23.59	00.00	●
P93.06–P93.09	Reserved			

P94 group—HVAC

Function code	Name	Description	Default	Modify
P94.00	HVAC function selection	0: Invalid 1: Valid	0	◎
P94.01	Sleep method selection	0: Run at the frequency lower limit 1: Sleep based on running frequency 2: Sleep based on deviation	0	○
P94.02	Sleep starting frequency	P00.05–P00.04 (Upper limit of running frequency) When the running frequency is less than or equal to the value and this situation lasts the time longer than P94.04,	5.00Hz	○

Function code	Name	Description	Default	Modify
		sleep is allowed.		
P94.03	Sleep starting deviation	0.0–30.0% (relative to PID1 max. value) When output is positive, if the feedback is greater than the reference, sleep is allowed only when the absolute difference is greater than the value of this function code and the situation lasts the time longer than P94.04. When output is negative, if the feedback is less than the reference, sleep is allowed only when the absolute difference is greater than the value of this function code and this situation lasts the time longer than P94.04.	5.0%	○
P94.04	Sleep delay	0.0–3600.0s	60.0s	○
P94.05	PID1 reference boost value	-100.0–100.0% (relative to PID1 reference value)	10.0%	○
P94.06	Longest boost time	0.0–6000.0s This function is used for continuous VFD running when the running frequency reaches the upper limit frequency but the feedback value cannot reach the setting after boost. In this situation, the VFD enters the sleep mode at once after the boost time.	10.0s	○
P94.07	Wake-up-from-sleep frequency	P00.05–P00.03 (Upper limit frequency) In closed-loop PID, the PID output is superimposed directly from the corresponding value of this frequency when the VFD is woken up.	5.00Hz	○
P94.08	Wake-up-from-sleep deviation	0.0–30.0% (relative to PID1 max. value) In closed-loop PID, when output is positive, if the feedback is less than the reference, wakeup is allowed only when the actual difference is greater than the value of this function code and this situation lasts the time longer than P94.09. When output is negative, if the feedback is greater than the reference, wakeup is allowed only when the actual difference is greater than the value of this function code and this situation lasts the time longer than P94.09.	5.0%	○
P94.09	Wake-up-from-sleep delay	0.0–3600.0s Min. sleep time.	5.0s	○

Function code	Name	Description	Default	Modify
P94.10	Variable-frequency motor run mode	0: Fixed Motor A is a variable-frequency motor. The other motors are power-frequency motors. 1: Circular According to the wiring method in the appendix, use the relays and motors with the same quantity to achieve cyclic power/variable frequency switchover.	1	◎
P94.11	Total number of motors	0–8, corresponding to motors A–H. The sequence numbers must be successive.	1	◎
P94.12–P94.18	Reserved			
P94.19	Pressure tolerance for motor adding	0.0–30.0% (relative to PID1 max. value)	5.0%	○
P94.20	Running frequency for motor adding	P94.25 (Running frequency for motor reducing)–P00.03	50.00Hz	○
P94.21	Motor adding delay	0.0–3600.0s	10.0s	○
P94.22	Switching frequency for variable-frequency motor adding	P00.05 (Lower limit frequency)–P00.03	50.00Hz	○
P94.23	Variable-frequency motor DEC time for power-frequency motor adding	0.0–300.0s	10.0s	○
P94.24	Pressure tolerance for motor reducing	0.0–30.0% (relative to PID1 max. value)	4.0%	○
P94.25	Running frequency for motor reducing	P00.05–P94.20 (Running frequency for motor adding)	5.00Hz	○
P94.26	Motor reducing delay	0.0–3600.0s	10.0s	○
P94.27	Variable-frequency motor action for motor reducing	0: Keep the frequency unchanged 1: Accelerate to the motor running frequency	1	○
P94.28	Variable-frequency motor ACC time for motor reducing	0.0–300.0s	10.0s	○
P94.29	Multi-motor pressure loss compensation	0: No 1: Yes	0	○
P94.30	Pressure reference	0.0–100.0% (relative to PID1 reference value)	5.0%	○

Function code	Name	Description	Default	Modify
	boost value for one auxiliary motor			
P94.31	Pressure reference boost value for two auxiliary motors	0.0–100.0% (relative to PID1 reference value)	10.0%	○
P94.32	Pressure reference boost value for three auxiliary motors	0.0–100.0% (relative to PID1 reference value)	15.0%	○
P94.33	Reserved			
P94.34	Motor polling cycle	0.0–6000.0h Automatic polling is targeted at idle variable-frequency motors. The value 0 indicates no polling.	0.0h	○
P94.35	Running frequency threshold for polling	P00.05–P00.03 When the running frequency is greater than the value of this function code, variable-frequency motor polling is not performed. Otherwise, great water pressure change impacts water supply.	45.00Hz	○
P94.36	Contactor closing delay	0.2–100.0s The delay starts after the contactor closing command is given. The VFD startup command is given after the delay since actual contactor closing also takes some time.	0.5s	○
P94.37	Contactor opening delay	0.2–100.0s Some time is taken from giving the contactor opening command to actual contactor opening. After the delay, the VFD controls the motor to switch to power frequency.	0.5s	○
P94.38	Manual soft startup switching frequency	0.00–P00.03 Used to check whether a motor can run properly.	50.00Hz	○
P94.39	Water level signal input selection of inlet pool	0: None 1: Digital 2: AI1 3: AI2 4: AI3 5: HDIA 6: Communication card	0	○
P94.40	Water level upper limit of inlet pool	0.0–100.0%	60.0%	○

Function code	Name	Description	Default	Modify
P94.41	Water level lower limit of inlet pool	0.0–100.0%	40.0%	○
P94.42	Water shortage level of inlet pool	0.0–100.0%	20.0%	○
P94.43	Backup pressure upon exceptions	0.0–100.0% (relative to PID1 max. value)	0.0%	○
P94.44	Protection value for PID1 feedback too low	0.0–100.0% (relative to PID1 max. value)	10.0%	○
P94.45	Delay of PID1 feedback too low	0.0–3600.0s Corresponding terminal output that is set when PID1 feedback value is less than P94.44 and this situation lasts the time longer than P94.45.	500.0s	○
P94.46	Protection value for PID1 feedback too high	0.0–100.0% (relative to PID1 max. value)	80.0%	○
P94.47	Delay of PID1 feedback too high	0.0–3600.0s Corresponding terminal output that is set when PID1 feedback value is greater than P94.46 and this situation lasts the time longer than P94.47.	500.0s	○
P94.48	DEC time of emergency stop	0.0–600.0s	2.0s	○
P94.49	ACC time with water pump frequency	0–3600.0s	Depends on model	○
P94.50	DEC time with water pump frequency	0–3600.0s	Depends on model	○

P95 group—Segmented water pressure (available at use of LCD keypad)

Function code	Name	Description	Default	Modify
P95.00	Actual time	00.00–23.59 Set the clock date and time in group P92.	00.00	●
P95.01	Number of pressure segments	0–8 The value 0 indicates this function is disabled.	0	○
P95.02	Start time of T1	After Tx elapsed, the water pressure changes to that corresponding to Tx. The water pressure before T1 is set to 0. You need to set the end time segment. P95.01 indicates the number of valid	00.00	○
P95.03	Pressure at T1		0.0%	○
P95.04	Start time of T2		23.00	○
P95.05	Pressure at T2		0.0%	○

Function code	Name	Description	Default	Modify
P95.06	Start time of T3	segments. The setting that is out of the segment range is invalid. If the start time of Tx is later than the start time of T(x+1), T(x+1) automatically changes to Tx.	23.00	○
P95.07	Pressure at T3		0.0%	○
P95.08	Start time of T4		23.00	○
P95.09	Pressure at T4		0.0%	○
P95.10	Start time of T5		23.00	○
P95.11	Pressure at T5		0.0%	○
P95.12	Start time of T6		23.00	○
P95.13	Pressure at T6		0.0%	○
P95.14	Start time of T7		23.00	○
P95.15	Pressure at T7		0.0%	○
P95.16	Start time of T8		23.59	○
P95.17	Pressure at T8		0.0%	○

P96 group—HVAC protection

Function code	Name	Description	Default	Modify
P96.00	Action upon water pipe break	0: Normal running 1: Stop	0	○
P96.01	Detection level of water pipe break	After water pipe break, the VFD running frequency boosts up to the upper limit or the PID output upper limit frequency. When it is set to 0, the water pipe break function is invalid. Range: 0.0–100.0%	10.0%	○
P96.02	Detection time of water pipe break	Used to check the detection time of water pipe break. Range: 0.0–6000.0s	120.0s	○
P96.03	Water pipe soft padding function	0: Disable 1: Enable	0	○
P96.04	Reference frequency for soft padding	0.00–P00.03	30.00Hz	○
P96.05	Duration of reference frequency for soft padding	0.0–6000.0s	10.0s	○
P96.06	Soft padding cutoff detection level	The PID function is valid when the feedback value is greater than the value of this function code. Range: 0.0–100.0%	30.0%	○

Function code	Name	Description	Default	Modify
P96.07–P96.09	Reserved			
P96.10	Enabling freezing protection	Protection against freezing: The freezing protection signal is activated when the detected temperature is lower than the protection threshold; this signal is ignored if the VFD is running. If the run command is received after the protection has been activated, the protection is terminated and the run command is executed. If a stop command is received after the protection has been activated, the motor is stopped and automatic protection is disabled. Automatic protection can be enabled only when the temperature is higher than the protection threshold. 0: Disable 1: Enable	0	○
P96.11	Temperature sensor type	Select current output for AO, connect one end of the temperature resistor to AI1 and AO1 and the other end to GND. 0: Invalid 1: PT100 2: PT1000 3: KTY84	0	○
P96.12	Freezing protection threshold	-20.0°C–20.0°C	-5.0°C	○
P96.13	Low-temperature pre-alarm threshold	-20.0°C–20.0°C When the temperature is lower than the value of this function code, the pre-alarm terminal outputs a signal.	0.0°C	○
P96.14	Freezing protection frequency	0.0–P00.04	0.0Hz	○
P96.15	Current of triggering condensation protection	0.0–100.0% When an external terminal triggers the condensation protection signal, the VFD transfers DC current and stops the transfer if the duration reaches 40s. The condensation protection signal needs to be triggered again.	30.0%	○
P96.16–P96.19	Reserved			
P96.20	Forward run	0.00Hz–P00.04	50.00Hz	○

Function code	Name	Description	Default	Modify
	frequency for pump cleaning			
P96.21	Reverse run frequency for pump cleaning	0.00Hz–P00.04	50.00Hz	○
P96.22	Forward run ACC time for pump cleaning	0.0–3600.0s	5.0s	○
P96.23	Reverse run ACC time for pump cleaning	0.0–3600.0s	5.0s	○
P96.24	Forward run duration for pump cleaning	0.0–3600.0s	5.0s	○
P96.25	Reverse run duration for pump cleaning	0.0–3600.0s	5.0s	○
P96.26	Forward/reverse run interval for pump cleaning	0.0–3600.0s	1.0s	○
P96.27	Number of pump cleaning cycles	1–1000	1	○
P96.28	Motor stalling function selection	Prerequisite for selecting the function: The VFD exceeds the stalling current limit, the output frequency is lower than the stalling frequency upper limit, and the duration of this situation exceeds the stalling time. 0: Disable 1: Alarm 2: Faulty	0	○
P96.29	Stalling current limit	0.0–1600.0% **Note:** 100.0% corresponds to the motor rated current.	200.0%	○
P96.30	Stalling frequency upper limit	0.00–P00.06 It cannot be lower than 10Hz.	15Hz	○
P96.31	Stalling detection time	0.0–3600.0s	2.0s	○
P96.32	Motor dry pumping function selection	0: Disable 1: Alarm 2: Faulty	0	○
P96.33	Current limit for motor dry pumping	0.0%–100.0% **Note:** 100.0% corresponds to the motor rated current.	0.0%	○
P96.34	Detection time for motor dry pumping	0.0–3600.0s	2.0s	○

Function code	Name	Description	Default	Modify
P96.35	Motor overtemperature point	When the detected motor temperature is higher than the value of this function code, a fault is reported.	110.0°	

7 Troubleshooting

7.1 What this chapter contains

The chapter tells you how to reset faults and check faults history. A complete list of alarms and fault information as well as possible causes and corrective measures are presented in this chapter.

	• Only trained and qualified professionals are allowed to carry out the operations mentioned in this chapter. Please carry out operations according to instructions presented in chapter **1 Safety precautions**.

7.2 Indications of alarms and faults

Faults are indicated by indicators. See section 5.3 LED keypad (BOP-270) display and operation. When the TRIP indicator is on, the alarm or fault code displayed on the keypad indicates the VFD is in abnormal state. This chapter covers most of the alarms and faults, and their possible causes and corrective measures. If you cannot find out the causes of alarms or faults, contact local Kruger office.

7.3 Fault reset

The VFD can be reset by pressing the keypad key STOP/RST, digital inputs, or by cutting off the VFD power. After faults are removed, the motor can be started again.

7.4 Fault history

The function codes from P07.27 to P07.32 record the types of the last six faults. The function codes P07.33–P07.40, P07.41–P07.48, P07.49–P07.56 record the running data of the VFD at the last three faults.

7.5 Faults and solutions

Do as follows if the VFD encounters a fault:

1. Check whether there is any exception on the keypad. If yes, contact the local Kruger office.
2. If keypad works properly, check the function codes in P07 group to check the fault record parameters to determine the real state when the fault occurred.
3. See the following table for a detailed solution and check for exceptions.
4. Rectify the fault or ask for help.
5. Ensure the fault has been rectified, perform fault reset, and run the VFD again.

7.5.1 Faults and solutions

Note: The numbers enclosed in square brackets such as [1], [2] and [3] in the Fault type column in the following table indicate the VFD fault type codes read through communication.

Fault code	Fault type	Possible cause	Solution
OUt1	[1] Inverter unit U-phase protection	ACC too fast. IGBT module is damaged. Misoperation caused by interference. Drive wires connected poorly. To-ground short circuit occurred.	Increase ACC time. Replace the power unit. Check drive wires. Check whether there is strong interference surrounding the peripheral device.
OUt2	[2] Inverter unit V-phase protection		
OUt3	[3] Inverter unit W-phase protection		
OV1	[7] Overvoltage during ACC	DEC time too short. Input voltage exception. Large energy feedback. No braking components. Energy-consumption braking is not enabled.	Check the input power. Check whether load DEC time is too short or the motor starts during rotating. Install dynamic braking components. Check the settings of related function codes.
OV2	[8] Overvoltage during DEC		
OV3	[9] Overvoltage during constant speed running		
OC1	[4] Overcurrent during ACC	ACC/DEC too fast. Grid voltage too low. VFD power too small. Load transient or exception occurred. To-ground short circuit or output phase loss occurred. Strong external interference sources. The overcurrent stall protection is not enabled.	Increase ACC/DEC time. Check the input power. Select a VFD with larger power. Check whether the load is short circuited (to-ground short circuit or line-to-line short circuit) or the rotation is not smooth. Check the output wiring. Check whether there is strong interference. Check the settings of related function codes.
OC2	[5] Overcurrent during DEC		
OC3	[6] Overcurrent during constant speed running		
UV	[10] Bus undervoltage	Grid voltage too low. The overvoltage stall protection is not enabled.	Check the grid input power. Check the settings of related function codes.
OL1	[11] Motor overload	Grid voltage too low. Motor rated current set incorrectly. The motor stall occurs or the load transient is too large.	Check the grid voltage. Reset the rated current of the motor. Check the load and adjust the torque boost quantity.
OL2	[12] VFD overload	ACC too fast. The motor in rotating is	Increase ACC time. Avoid restart after stop.

Fault code	Fault type	Possible cause	Solution
		restarted. Grid voltage too low. Load is too large. Power is too small.	Check the grid voltage. Select a VFD with larger power. Select a proper motor.
SPI	[13] Phase loss on input side	Phase loss or violent fluctuation occurred on input R, S, T.	Check the input power. Check the installation wiring.
SPO	[14] Phase loss on output side	Phase loss occurred to U, V, W output (or the three phases of motor is asymmetrical).	Check the output wiring. Check the motor and cables.
OH1	[15] Rectifier module overheating	Air duct blocked or fan damaged. Ambient temperature too high. Long-time overload running.	Ventilate the air duct or replace the fan. Lower the ambient temperature.
OH2	[16] Inverter module overheating Fault		
EF	[17] External fault	SI external faulty input terminal action.	Check external device input.
CE	[18] RS485 communication fault	Baud rate set improperly. Communication line fault. Incorrect communication address. Communication suffers from strong interference.	Set a proper baud rate. Check the wiring of communication interfaces. Set the communication address correctly. Change or replace the wire or improve the anti-interference capability.
ItE	[19] Current detection fault	Poor contact of the connector of control board. Hall component damaged. Amplification circuit exception.	Check the connector and re-plug. Replace the hall component. Replace the main control board.
tE	[20] Motor autotuning fault	Motor capacity does not match with the VFD capacity. This fault may occur if the capacity difference exceeds five power classes. Incorrect motor parameter settings. The parameters gained from autotuning deviate	Change the VFD model, or adopt V/F mode for control. Set the proper motor type and nameplate parameters. Empty the motor load and carry out autotuning again. Check the motor wiring and parameter settings. Check whether the upper limit frequency is larger than 2/3 of

Fault code	Fault type	Possible cause	Solution
		sharply from the standard parameters. Autotuning timeout.	the rated frequency.
EEP	[21] EEPROM operation fault	Control parameter reading/writing error. EEPROM damaged.	Press STOP/RST to reset. Replace the main control board.
PIDE	[22] PID feedback offline fault	PID feedback offline. PID feedback source disappears.	Check PID feedback signal wires. Check PID feedback source.
END	[24] Running time reached	The actual running time of the VFD is longer than the internal set running time.	Ask for the supplier and adjust the set running time.
OL3	[25] Electronic overload fault	The VFD reports overload pre-alarm according to the setting.	Check the load and the overload pre-alarm points.
PCE	[26] Keypad communication fault	Keypad cable connected improperly or disconnected. Keypad cable too long, causing strong interference. Keypad or mainboard communication circuit error.	Check the keypad cable to determine whether a fault occurs. Check for and remove the external interference source. Replace the hardware and seek maintenance services.
UPE	[27] Parameter upload error	Keypad cable connected improperly or disconnected. Keypad cable too long, causing strong interference. Keypad or mainboard communication circuit error.	Check for and remove the external interference source. Replace the hardware and seek maintenance services. Replace the hardware and seek maintenance services.
DNE	[28] Parameter download error	Keypad cable connected improperly or disconnected. Keypad cable too long, causing strong interference. Data storage error occurred to the keypad.	Check for and remove the external interference source. Replace the hardware and seek maintenance services. Re-back up the data on the keypad.
ETH1	[32] To-ground short-circuit fault 1	VFD output is short connected to the ground. There is a fault in the	Check whether the motor wiring is normal. Replace the hall component. Replace the main control

Fault code	Fault type	Possible cause	Solution
		current detection circuit. Actual motor power setup deviates sharply from the VFD power..	board. Reset the motor parameters properly.
ETH2	[33] To-ground short-circuit fault 2	VFD output is short connected to the ground. There is a fault in the current detection circuit. Actual motor power setup deviates sharply from the VFD power..	Check whether the motor wiring is normal. Replace the hall component. Replace the main control board. Reset the motor parameters properly.
dEu	[34] Speed deviation fault	The load is too heavy or stalled.	Check and ensure the load is proper, and increase the detection time. Check whether the control parameters are set properly.
STo	[35] Mal-adjustment fault	Incorrect SM control parameter settings. Autotuned parameters are not accurate. The VFD is not connected to the motor.	Check the load and ensure the load is normal. Check whether control parameters are set correctly. Increase the mal-adjustment detection time.
LL	[36] Electronic underload fault	The VFD reports underload pre-alarm according to the setting.	Check the load and the underload pre-alarm points.
OT	[59] Motor overtemperature fault	Motor overtemperature input terminal is valid. The temperature detection resistance is abnormal. Long-time overload running or exception occurred.	Check the wiring of the motor overtemperature input terminal (terminal function 57). Check whether the temperature sensor is proper. Check the motor, and perform maintenance on the motor.
E-Err	[55] Duplicate expansion card type	The two inserted expansion cards are of the same type.	You should not insert two cards with the same type. Check the type of expansion card, and remove one card after power-off.
F1-Er	[60] Failed to identify the expansion card at card slot 1	There is data transmission in interfaces of card slot 1, however, it cannot read the card type.	Check whether the expansion card at this slot is supported. Stabilize the expansion card interfaces after power-off, and check whether the fault

Fault code	Fault type	Possible cause	Solution
			persists at next power-on. Check whether the insertion port is damaged, if yes, replace the insertion port after power-off.
F2-Er	[61] Failed to identify the expansion card at card slot 2	There is data transmission in interfaces of card slot 2, however, it cannot read the card type.	Check whether the expansion card at this slot is supported. Stabilize the expansion card interfaces after power-off, and check whether the fault persists at next power-on. Check whether the insertion port is damaged, if yes, replace the insertion port after power-off.
C1-Er	[63] Communication timeout of expansion card at card slot 1	There is no data transmission in interfaces of card slot 1.	Check whether the expansion card at this slot is supported. Stabilize the expansion card interfaces after power-off, and check whether the fault persists at next power-on. Check whether the insertion port is damaged, if yes, replace the insertion port after power-off.
C2-Er	[64] Communication timeout of expansion card at card slot 2	There is no data transmission in interfaces of card slot 2.	Check whether the expansion card at this slot is supported. Stabilize the expansion card interfaces after power-off, and check whether the fault persists at next power-on. Check whether the insertion port is damaged, if yes, replace the insertion port after power-off.
E-DP	[29] PROFIBUS card communication timeout fault	There is no data transmission between the communication card and the host computer (or PLC).	Check whether the communication card wiring is loose or dropped.
E-NET	[30] Ethernet card communication timeout fault	There is no data transmission between the communication card and the host computer.	Check whether the communication card wiring is loose or dropped.

Fault code	Fault type	Possible cause	Solution
E-CAN	[31] CANopen card communication timeout fault	There is no data transmission between the communication card and the host computer (or PLC).	Check whether the communication card wiring is loose or dropped.
E-PN	[57] PROFINET card communication timeout fault	There is no data transmission between the communication card and the host computer (or PLC).	Check whether the communication card wiring is loose or dropped.
E-BAC	[67] BACNet card communication timeout fault	There is no data transmission between the communication card and the host computer (or PLC).	Check whether the communication card wiring is loose or dropped.
ESCAN	[58] CAN master/slave card communication timeout fault	There is no data transmission between the CAN master and slave communication cards.	Check whether the communication card wiring is loose or dropped.
S-Err	[69] CAN slave fault in master/slave synchronization	Fault occurred to one of the CAN slave VFDs.	Detect the CAN slave VFD and analyze the corresponding fault cause of the VFD.
FrOST	[73] Freezing fault	The temperature is lower than the freezing protection threshold.	Check the temperature.
BLOCK	[74] Stalling fault	The current is greater than the stalling current.	Check for stalling.
Dr	[75] Dry pumping fault	The current is lower than the current limit for motor dry pumping.	Check for dry pumping.

7.5.2 Other status

Displayed code	Status type	Possible cause	Solution
PoFF	System power failure	The system is powered off or the bus voltage is too low.	Check the grid conditions.

7.6 Analysis on common faults

7.6.1 Motor fails to work

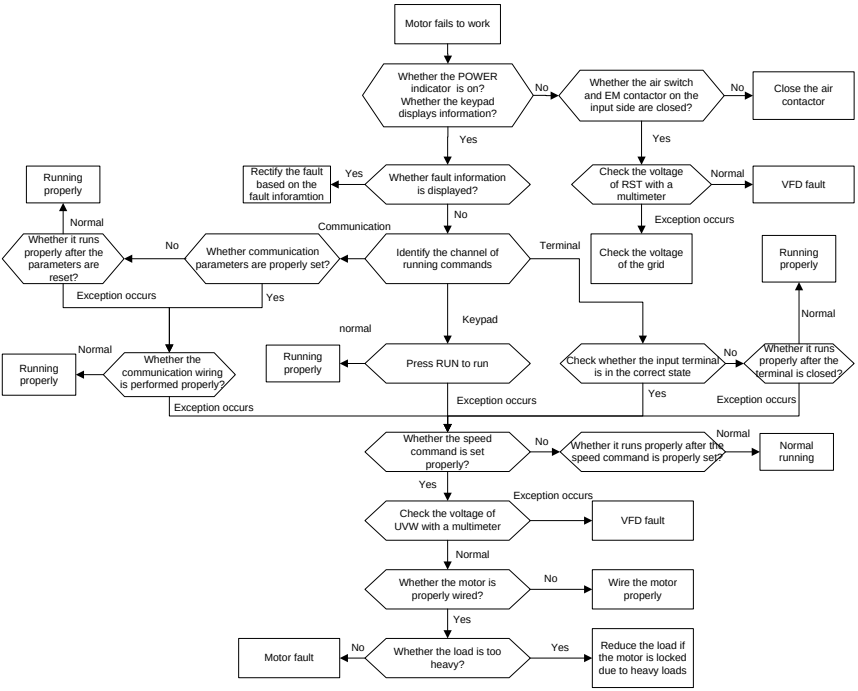

7.6.2 Motor vibrates

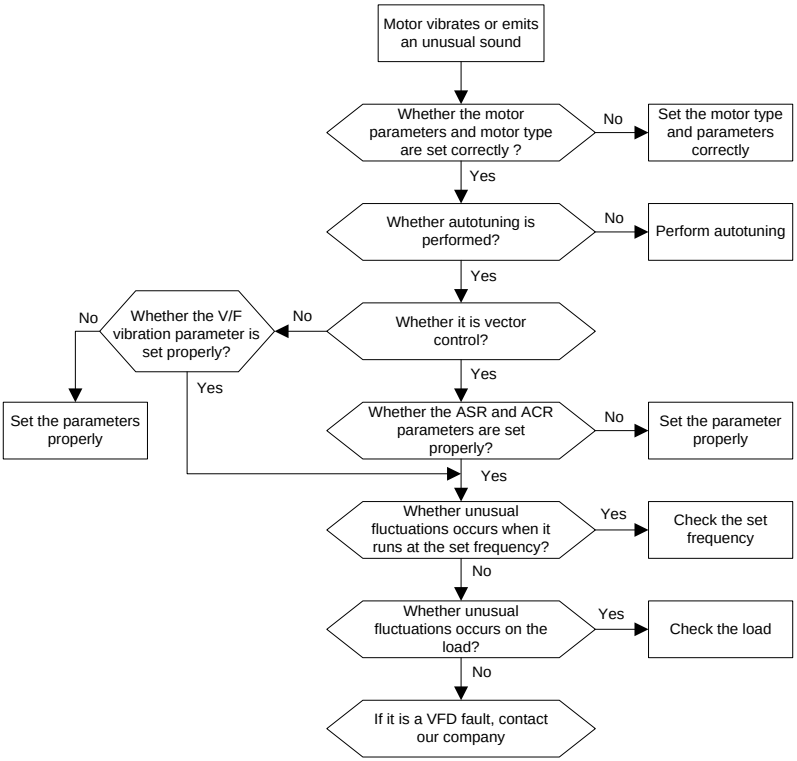

7.6.3 Overvoltage

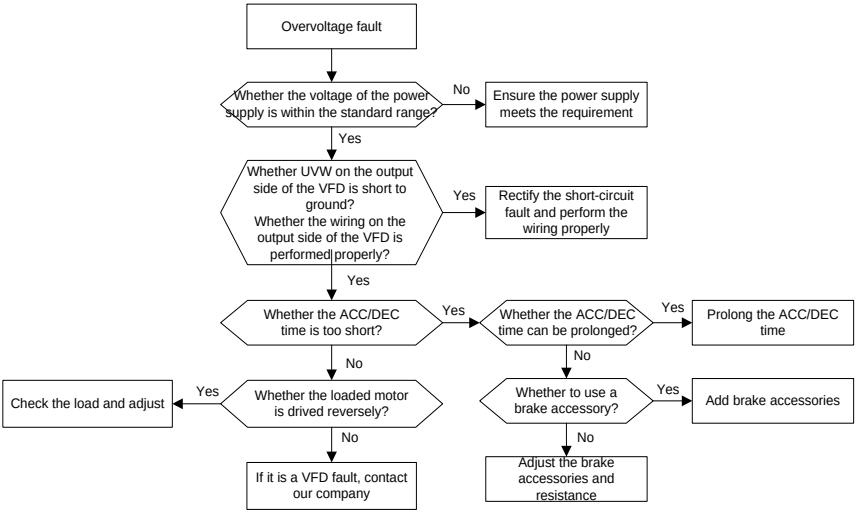

7.6.4 Undervoltage

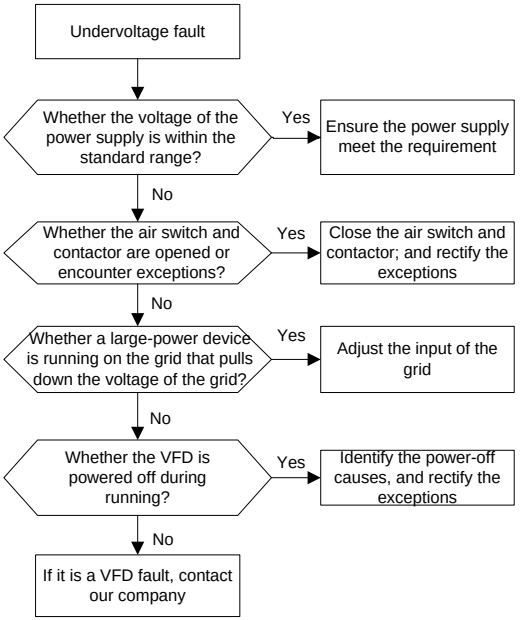

7.6.5 Motor overheating

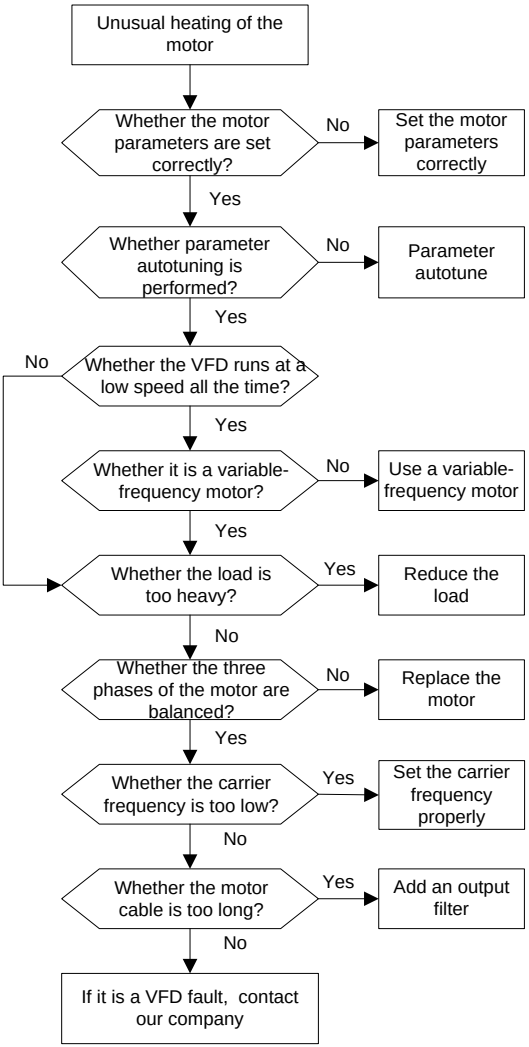

7.6.6 VFD overheating

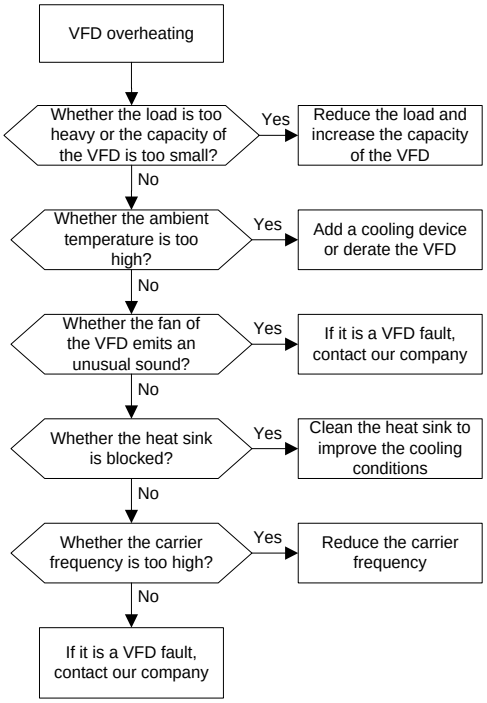

7.6.7 Motor stalls during ACC

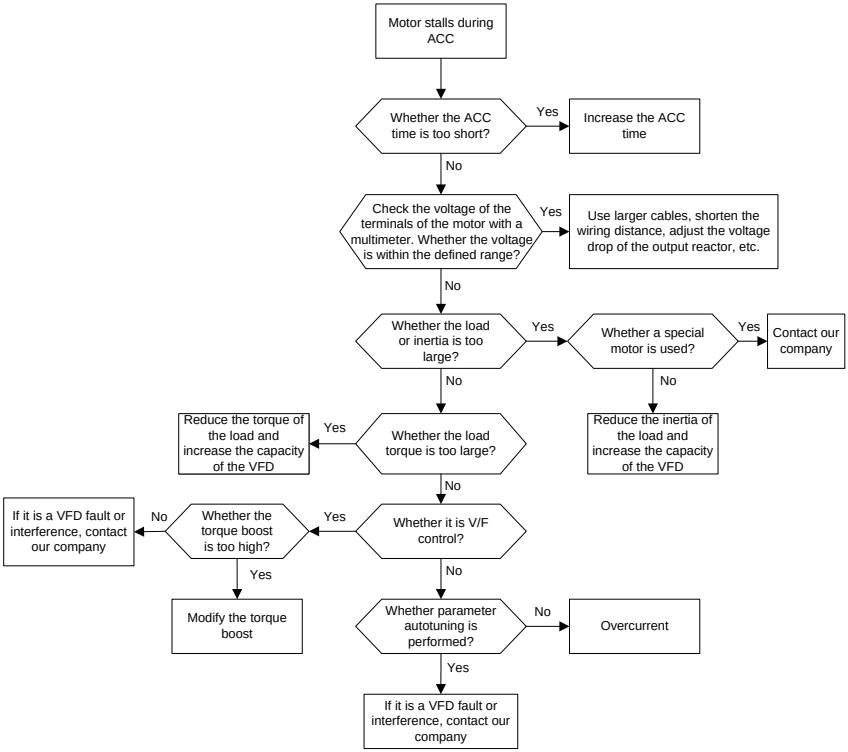

7.6.8 Overcurrent

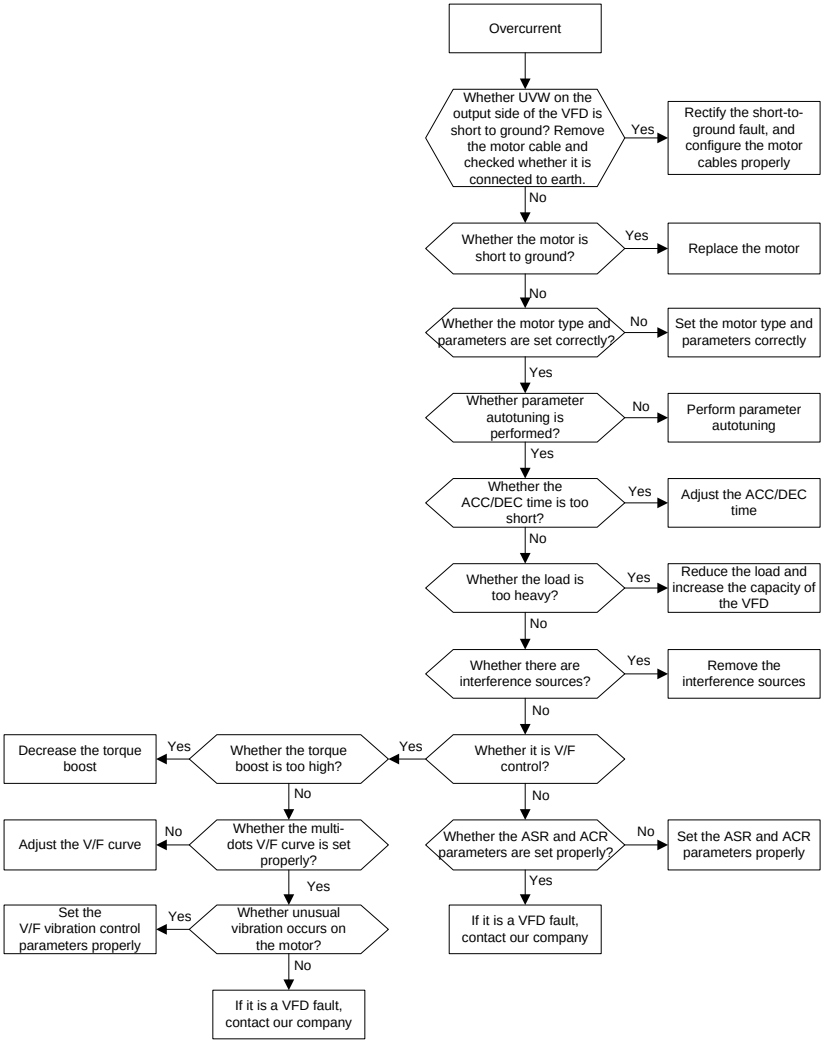

\

7.7 Countermeasures on common interference

7.7.1 Interference on meter switches and sensors

Interference phenomenon

Pressure, temperature, displacement, and other signals of a sensor are collected and displayed

by a human-machine interaction device. The values are incorrectly displayed as follows after the VFD is started:

1. The upper or lower limit is wrongly displayed, for example, 999 or -999.
2. The display of values jumps (usually occurring on pressure transmitters).
3. The display of values is stable, but there is a large deviation, for example, the temperature is dozens of degrees higher than the common temperature (usually occurring on thermocouples).
4. A signal collected by a sensor is not displayed but functions as a drive system running feedback signal. For example, the VFD is expected to decelerate when the upper pressure limit of the compressor is reached, but in actual running, it starts to decelerate before the upper pressure limit is reached.
5. After the VFD is started, the display of all kinds of meters (such as frequency meter and current meter) that are connected to the analog output (AO) terminal of the VFD is severely affected, displaying the values incorrectly.
6. Proximity switches are used in the system. After the VFD is started, the indicator of a proximity switch flickers, and the output level flips.

Solution

1. Check and ensure that the feedback cable of the sensor is 20 cm or farther away from the motor cable.
2. Check and ensure that the ground wire of the motor is connected to the PE terminal of the VFD (if the ground wire of the motor has been connected to the ground block, you need to use a multimeter to measure and ensure that the resistance between the ground block and PE terminal is lower than 1.5 Ω).
3. Try to add a safety capacitor of 0.1μF to the signal end of the feedback signal terminal of the sensor.
4. Try to add a safety capacitor of 0.1μF to the power end of the sensor meter (pay attention to the voltage of the power supply and the voltage endurance of the capacitor).
5. For interference on meters connected to the AO terminal of the VFD, If AO uses 0–20mA current signal, add a capacitor of 0.47μF between the AO and GND terminals; if AO uses 0–10V voltage signal, add a capacitor of 0.1μF between the AO and GND terminals.

Note:

- When a decoupling capacitor is required, add it to the terminal of the device connected to the sensor. For example, if a thermocouple is to transmit signals of 0 to 20 mA to a temperature meter, the capacitor needs to be added on the terminal of the temperature meter; if an electronic ruler is to transmit signals of 0 to 30 V to a PLC signal terminal, the capacitor needs to be added on the terminal of the PLC.

- If a large number of meters or sensors are disturbed, it is recommended that you configure an external C2 filter on the VFD input power end. For details, see section D.7 Filter.

7.7.2 Interference on RS485 communication

The interference described in this section on RS485 communication mainly includes communication delay, out of synchronization, occasional power-off, or complete power-off that occurs after the VFD is started.

If the communication cannot be implemented properly, regardless of whether the VFD is running, the exception is not necessarily caused by interference. You can find out the causes as follows:

1. Check whether the RS485 communication bus is disconnected or in poor contact.
2. Check whether the two ends of line A or B are connected reversely.
3. Check whether the communication protocol (such as the baud rate, data bits, and check bit) of the VFD is consistent with that of the upper computer.

If you are sure that communication exceptions are caused by interference, you can resolve the problem through the following measures:

1. Simple inspection.
2. Arrange the communication cables and motor cables in different cable trays.
3. In multi-VFD application scenarios, adopt the chrysanthemum connection mode to connect the communication cables between VFDs, which can improve the anti-interference capability.
4. In multi-VFD application scenarios, check and ensure that the driving capacity of the master is sufficient.
5. In the connection of multiple VFDs, you need to configure one 120 Ω terminal resistor on each end.

Solution

1. Check and ensure that the ground wire of the motor is connected to the PE terminal of the VFD (if the ground wire of the motor has been connected to the ground block, you need to use a multimeter to measure and ensure that the resistance between the ground block and PE terminal is lower than 1.5 Ω).
2. Do not connect the VFD and motor to the same ground terminal as the host controller (such as the PLC, HMI, and touch screen). It is recommended that you connect the VFD and motor to the power ground, and connect the upper computer separately to a ground stud.
3. Try to short the signal reference ground terminal (GND) of the VFD with that of the upper computer controller to ensure that ground potential of the communication chip on the control board of the VFD is consistent with that of the communication chip of the upper computer.
4. Try to change the short-connection cap of jumper J9 on the VFD control board from 1/2 pins to 2/3 pins.
5. Try to add a safety capacitor of 0.1 μF on the power terminal of the upper computer (PLC, HMI, and touch screen). During this process, pay attention to the voltage of the power supply and the voltage endurance capability of the capacitor. Alternatively, you can use a magnet ring (Fe-based nanocrystalline magnet rings are recommended). Put the power L/N line or +/- line of the upper computer through the magnet ring in the same direction and wind 8 coils around the magnet ring.

7.7.3 Failure to stop and indicator shimmering due to motor cable coupling

Interference phenomenon

1. Failure to stop

   In a VFD system where an S terminal is used to control the start and stop, the motor cable and control cable are arranged in the same cable tray. After the system is started properly, the S terminal cannot be used to stop the inverter.

2. Indicator shimmering

   After the VFD is started, the relay indicator, power distribution box indicator, PLC indicator, and indication buzzer shimmer, blink, or emit unusual sounds unexpectedly.

Solution

1. Check and ensure that the exception signal cable is arranged 20 cm or farther away from the motor cable.
2. Add a safety capacitor of 0.1μF between the digital input terminal (S) and the COM terminal.
3. Connect the digital input terminal (S) that controls the start and stop to other idle digital input terminals in parallel. For example, if S1 is used to control the start and stop and S4 is idle, you can try to short connect S1 to S4 in parallel.

Note: If the controller (such as PLC) in the system controls more than 5 VFDs at the same time through digital input terminals (S), this scheme is not applicable.

7.7.4 Leakage current and interference on RCD

VFDs output high-frequency PWM voltage to drive motors. In this process, the distributed capacitance between the internal IGBT of a VFD and the heat sink and that between the stator and rotor of a motor may inevitably cause the VFD to generate high-frequency leakage current to the ground. A residual current operated protective device (RCD) is used to detect the power-frequency leakage current when a grounding fault occurs on a circuit. The application of a VFD may cause misoperation of a RCD.

1. Rules for selecting RCDs

- VFD systems are special. In these systems, it is required that the rated residual current of common RCDs at all levels is larger than 200 mA, and the VFDs are grounded reliably.
- For RCDs, the time limit of an action needs to be longer than that of a next action, and the time difference between two actions need to be longer than 20ms. For example, 1s, 0.5s, and 0.2s.
- For circuits in VFD systems, electromagnetic RCDs are recommended. Electromagnetic RCDs have strong anti-interference capability, and thus can prevent the impact of high-frequency leakage current.

Electronic RCD	Electromagnetic RCD
Low cost, high sensitivity, small in volume, susceptible to voltage fluctuation of the grid and ambient temperature, and weak anti-interference capability	Requiring highly sensitive, accurate, and stable zero-phase sequence current transformer, using permalloy high-permeability materials, complex process, high cost, not susceptible to voltage fluctuation of the power supply and ambient temperature, strong anti- interference capability

2. Solution to RCD misoperation (handling the VFD)

- Try to remove the EMC screw or jumper at "EMC/VDR" of the VFD.

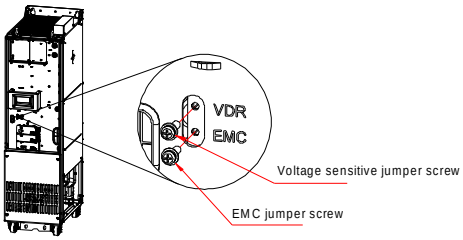

- Try to reduce the carrier frequency to 1.5 kHz (P00.14=1.5).
- Try to modify the modulation mode to "3PH modulation and 2PH modulation" (P08.40=00).

3. Solution to mal-operation of RCD (on the part of system distribution)

- Check and ensure that the power cable is not soaking in water.
- Check and ensure that the cables are not damaged or spliced.
- Check and ensure that no secondary grounding is performed on the neutral wire.
- Check and ensure that the main power cable terminal is in good contact with the air switch or contactor (all screws are tightened).
- Check 1PH powered devices, and ensure that no earth lines are used as neutral wires by these devices.
- Do not use shielded cables as VFD power cables and motor cables.

7.7.5 Live device chassis

After the VFD is started, there is sensible voltage on the chassis, and you may feel an electric shock when touching the chassis. The chassis, however, is not live (or the voltage is far lower than the human safety voltage) when the VFD is powered on but not running.

Solution:

1. If there is power distribution grounding or ground stud on the site, ground the cabinet chassis of the VFD through the power ground or stud.
2. If there is no grounding on the site, you need to connect the motor casing to the VFD grounding terminal PE, and ensure that the jumper at "EMC/ VDR" of the VFD is shorted.

8 Maintenance

8.1 What this chapter contains

This chapter describes how to carry out preventive maintenance on the VFD.

8.2 Periodical inspection

Little maintenance is required when the VFD is installed in an environment that meets requirements. The following table describes the routine maintenance periods recommended by Kruger.

Check scope		Check category	Method	Criterion
Ambient environment		Check the temperature, and humidity, and whether there is vibration, dust, gas, oil spray, and water droplets in the environment.	Visual inspection, and use instruments for measurement.	The requirements stated in this manual are met.
		Check whether there are foreign matters, such as tools, or dangerous substances placed nearby.	Visual inspection	There are no tools or dangerous substances placed nearby.
Voltage		Check the voltage of the main circuit and control circuit.	Use multimeters or other instruments for measurement.	The requirements stated in this manual are met.
Keypad		Check the display of information.	Visual inspection	The characters are displayed properly.
		Check whether characters are not completely displayed.	Visual inspection	The requirements stated in this manual are met.
Main circuit	Common	Check whether the bolts loose or come off.	Screw them up.	No exception.
		Check whether the machine is deformed, cracked, or damaged, or their color changes due to overheating and aging.	Visual inspection	No exception.
		Check whether there are stains and dust attached.	Visual inspection	No exception. **Note:** Discoloration of copper bars does not mean that they cannot work properly.
	Conductor and	Check whether conductors	Visual	No exception.

Check scope		Check category	Method	Criterion
	wire	are deformed or color change for overheat.	inspection	
		Check whether the wire sheaths are cracked or their color changes.	Visual inspection	No exception.
	Terminal block	Check whether there is damage.	Visual inspection	No exception.
	Filter capacitor	Check whether there is electrolyte leakage, discoloration, cracks, and chassis expansion.	Visual inspection	No exception.
		Check whether the safety valves are released.	Determine the service life based on the maintenance information, or measure them through electrostatic capacity.	No exception.
		Check whether the electrostatic capacity is measured as required.	Use instruments to measure the capacity.	Electrostatic capacity ≥ initial value x 0.85
	Resistor	Check whether there is displacement caused due to overheat.	Olfactory and visual inspection	No exception.
		Check whether the resistors are disconnected.	Visual inspection, or remove one end of the connection cable and use a multimeter for measurement.	Resistance range: ±10% (of the standard resistance)
	Transformer, Reactor	Check whether there is unusual vibration sounds or smells.	Auditory, olfactory, and visual inspection	No exception.
	Electromagnetic contactor and Relay	Check whether there are vibration sounds in the workshop.	Auditory inspection	No exception.
		Check whether the contacts are in good contact.	Visual inspection	No exception.
Control circuit	Control PCB and connector	Check whether the screws and connectors loose.	Screw them up.	No exception.

Check scope		Check category	Method	Criterion
		Check whether there is unusual smell or discoloration.	Olfactory and visual inspection	No exception.
		Check whether there are cracks, damage, deformation, or rust.	Visual inspection	No exception.
		Check whether there is electrolyte leakage or deformation.	Visual inspection, and determine the service life based on the maintenance information.	No exception.
Cooling system	Cooling fan	Check whether there are unusual sounds or vibration.	Auditory and visual inspection, and turn the fan blades with hand.	The rotation is smooth.
		Check whether the bolts loose.	Screw them up.	No exception.
		Check whether there is decoloration caused due to overheat.	Visual inspection, and determine the service life based on the maintenance information.	No exception.
	Ventilation duct	Check whether there are foreign matters blocking or attached to the cooling fan, air inlets, or air outlets. Check whether there are foreign objects attached.	Visual inspection	No exception.

For more details about maintenance, contact the local Kruger office, or visit our website www.krugerfan.com.

8.3 Cooling fan

The service life of the cooling fan of the VFD is more than 25,000 hours. The actual service life of the cooling fan is related to the use of the VFD and the temperature in the ambient environment.

You can view the running duration of the VFD through P07.14 (Accumulated running time).

The increase of the bearing noise indicates a fan fault. If the VFD is applied in a key position, replace the fan once the fan starts to generate unusual noise. You can purchase spares of fans from Kruger.

Cooling fan replacement:

⚠	• Read chapter 1 Safety precautions carefully and follow the instructions to perform operations. Ignoring these safety precautions may lead to physical injury or death, or device damage.

1. Stop the VFD, disconnect the AC power supply, and wait for a time no shorter than the waiting time designated on the VFD.
2. Open the cable clamp to loose the fan cable.
3. Disconnect the fan cable.
4. Remove the fan with a screwdriver.
5. Install a new fan in the VFD. Assemble the VFD. Ensure that the air direction of the fan is consistent with that of the VFD, as shown in the following figure.

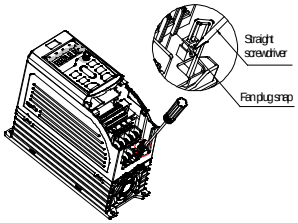

1. Remove the fan cable through the straight screwdriver.

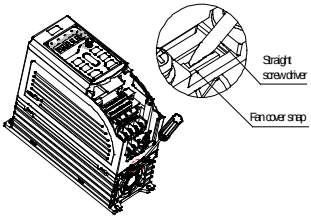

2. Remove the fan cover through the straight screwdriver.

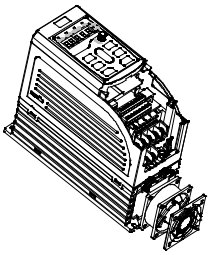

3. Take out of the fan and replace it.

Figure 8-1 Fan maintenance for 2.2–7.5kW VFD models (disassembly with tools)

Note: The K320C-1R5P-4 model is a fanless natural cooling design that requires no fan maintenance.

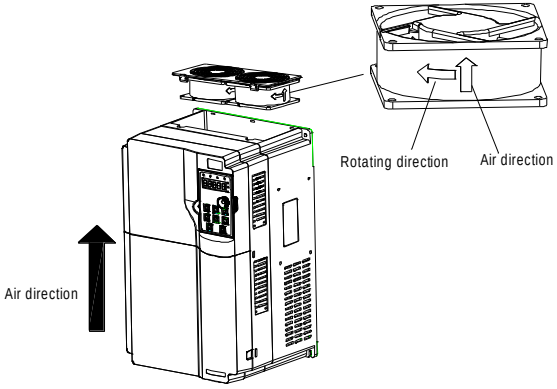

Figure 8-2 Fan maintenance for 11–200kW VFD models

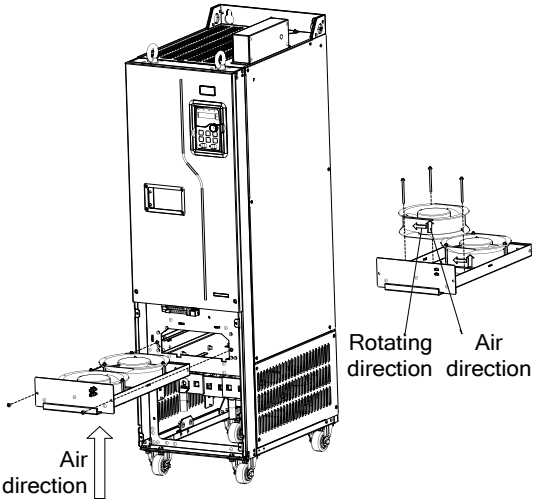

Figure 8-3 Fan maintenance for the 220kW and higher VFD models

6. Connect to the power.

8.4 Capacitor

8.4.1 Capacitor reforming

If the VFD has been left unused for a long time, you need to follow the instructions to reform the DC bus capacitor before using it. The storage time is calculated from the date the VFD is delivered.

Storage time	Operation principle
Less than 1 year	No charging operation is required.
1 to 2 years	The VFD needs to be powered on for 1 hour before the first running command.
2 to 3 years	Use a voltage controlled power supply to charge the VFD: Charge the VFD at 25% of the rated voltage for 30 minutes, and then charge it at 50% of the rated voltage for 30 minutes, at 75% for another 30 minutes, and finally charge it at 100% of the rated voltage for 30 minutes.
More than 3 years	Use a voltage controlled power supply to charge the VFD: Charge the VFD at 25% of the rated voltage for 2 hours, and then charge it at 50% of the rated voltage for 2 hours, at 75% for another 2 hours, and finally charge it at 100% of the rated voltage for 2 hours.

The method for using a voltage controlled power supply to charge the VFD is described as follows:

The selection of a voltage controlled power supply depends on the power supply of the VFD. For VFDs with an incoming voltage of 1PH/3PH 230 V AC, you can use a 230 V AC/2 A voltage regulator. Both 1PH and 3PH VFDs can be charged with a 1PH voltage controlled power supply (connecting L+ to R, and N to S or T). All the DC bus capacitors share one rectifier, and therefore they are all charged.

For VFDs of a high voltage class, ensure that the voltage requirement (for example, 380 V) is met during charging. Capacitor changing requires little current, and therefore you can use a small-capacity power supply (2 A is sufficient).

The method for using a resistor (incandescent lamp) to charge the drive is described as follows:

If you directly connect the drive device to a power supply to charge the DC bus capacitor, it needs to be charged for a minimum of 60 minutes. The charging operation must be performed at a normal indoor temperature without load, and you must connect a resistor in series mode in the 3PH circuit of the power supply.

For a 380 V drive device, use a resistor of 1 kΩ/100W. If the voltage of the power supply is no higher than 380V, you can also use an incandescent lamp of 100W. If an incandescent lamp is used, it may go off or the light may become very weak.

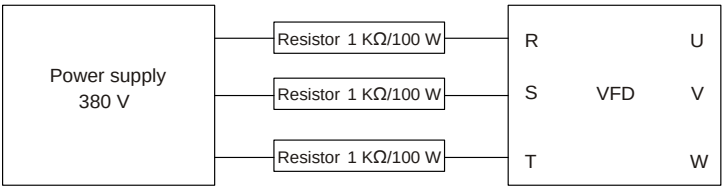

Figure 8-4 380V driving-device charging circuit example

8.4.2 Electrolytic capacitor replacement

⚠	• Read chapter 1 Safety precautions carefully and follow the instructions to perform operations. Ignoring these safety precautions may lead to physical injury or death, or device damage.

The electrolytic capacitor of a VFD must be replaced if it has been used for more than 35,000 hours. For details about the replacement, contact the local Kruger office.

8.5 Power cable

⚠	• Read chapter 1 Safety precautions carefully and follow the instructions to perform operations. Ignoring these safety precautions may lead to physical injury or death, or device damage.

1. Stop the VFD, disconnect the power supply, and wait for a time no shorter than the waiting time designated on the VFD.
2. Check the connection of the power cables. Ensure that they are firmly connected.
3. Connect to the power.

9 Communication protocol

9.1 What this chapter contains

This chapter describes the communication of the VFD.

The VFD provides RS485 communication interfaces and adopts the master-slave communication based on the international standard Modbus communication protocol. You can implement centralized control (setting commands for controlling the VFD, modifying the running frequency and related function code parameters, and monitoring the working state and fault information of the VFD) through PC/PLC, upper control computer, or other devices to meet specific application requirements.

9.2 Modbus protocol introduction

Modbus is a communication protocol for use with electronic controllers. By using this protocol, a controller can communicate with other devices through transmission lines. It is a general industrial standard. With this standard, control devices produced by different manufacturers can be connected to form an industrial network and be monitored in a centralized way.

The Modbus protocol provides two transmission modes, namely American Standard Code for Information Interchange (ASCII) and remote terminal units (RTU). On one Modbus network, all the device transmission modes, baud rates, data bits, check bits, stop bits, and other basic parameters must be set consistently.

A Modbus network is a control network with one master and multiple slaves, that is, on one Modbus network, there is only one device serving as the master, and other devices are the slaves. The master can communicate with any single slave or with all slaves. For separate access commands, a slave needs to return a response. For broadcasted information, slaves do not need to return responses.

9.3 Application of Modbus

The VFD uses the Modbus RTU mode and communicates through RS485 interfaces.

9.3.1 RS485

RS485 interfaces work in half-duplex mode and transmit data signals in the differential transmission way, which is also referred to as balanced transmission. An RS485 interface uses a twisted pair, where one wire is defined as A (+), and the other B (-). Generally, if the positive electrical level between the transmission drives A and B ranges from +2V to +6V, the logic is "1"; and if it ranges from -2V to -6V, the logic is "0".

The 485+ terminal on the terminal block of the VFD corresponds to A, and 485- corresponds to B.

The communication baud rate (P14.01) indicates the number of bits sent in a second, and the unit is bit/s (bps). A higher baud rate indicates faster transmission and poorer anti-interference capability. When a twisted pair of 0.56 mm (24 AWG) is used, the maximum transmission distance varies according to the baud rate, as described in the following table.

Baud rate	Max. transmission distance	Baud rate	Max. transmission distance
2400bps	1800m	9600bps	800m
4800bps	1200m	19200bps	600m

In long-distance RS485 communication, it is recommended that you use shielded cables, and use the shielding layer as the ground wire.

When there are fewer devices and the transmission distance is short, the whole network works well without terminal load resistors. The performance, however, degrades as the distance increases. Therefore, it is recommended that you use a 120 Ω terminal resistor when the transmission distance is long.

9.3.1.1 Application to one VFD

Figure 9-1 is the Modbus wiring diagram of one VFD and a PC. Generally, PCs do not provide RS485 interfaces, so you need to convert an RS232 interface or USB port of a PC to an RS485 interface. Connect end A of the RS485 interface to the 485+ port on the terminal block of the VFD, and connect end B to the 485- port. It is recommended that you use shielded twisted pairs. When an RS232-RS485 converter is used, the cable used to connect the RS232 interface of the PC and the converter cannot be longer than 15 m. Use a short cable when possible. It is recommended that you insert the converter directly into the PC. Similarly, when a USB-RS485 converter is used, use a short cable when possible.

After wiring, select the correct port (such as COM1 to connect the RS232-RS485 converter) on the upper computer, and set the basic parameters such as baud rate and data bit check consistent with those of the VFD.

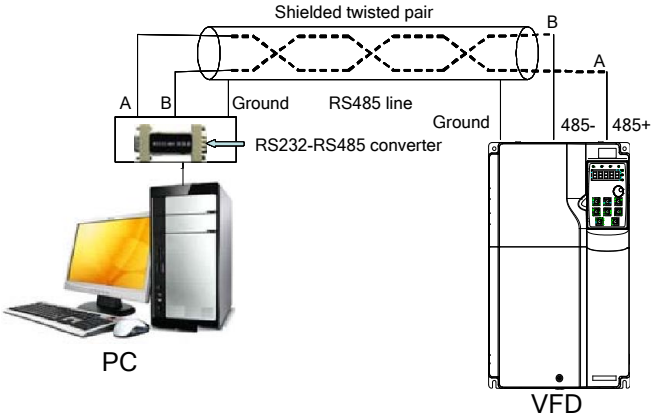

Figure 9-1 Wiring of one RS485 VFD application

9.3.1.2 Application to multiple VFDs

In practical application to multiple VFDs, chrysanthemum connection and star connection are commonly used.

According to the RS485 industrial bus standards, all devices need to be connected in chrysanthemum mode with one 120 Ω terminal resistor on each end, as shown in Figure 9-2. Figure 9-3 is the simplified wiring diagram, and Figure 9-4 is the practical application diagram.

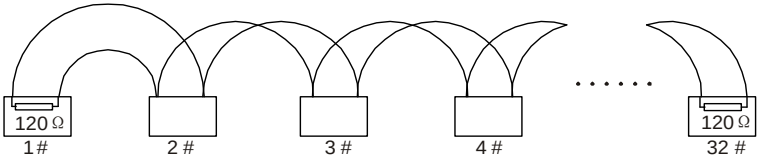

Figure 9-2 Onsite chrysanthemum connection

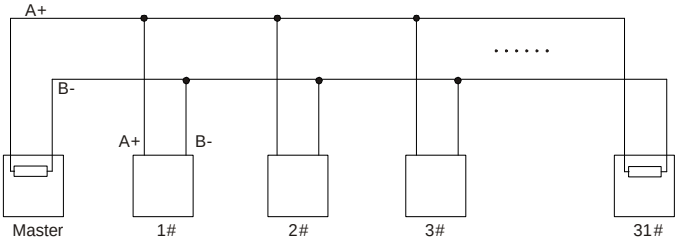

Figure 9-3 Simplified chrysanthemum connection

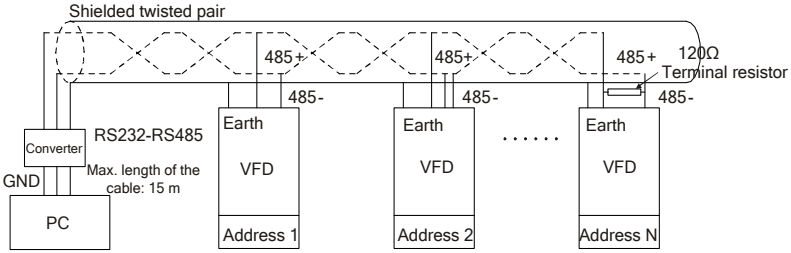

Figure 9-4 Practical chrysanthemum connection application

Figure 9-5 shows the start connection diagram. When this connection mode is adopted, the two devices that are farthest away from each other on the line must be connected with a terminal resistor (the two devices are devices #1 and #15).

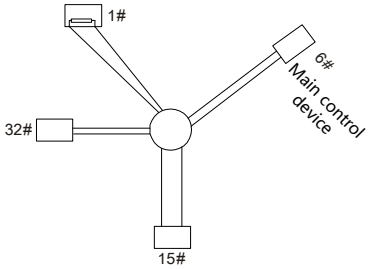

Figure 9-5 Star connection

Use shielded cables, if possible, in multi-device connection. The baud rates, data bit check settings, and other basic parameters of all the devices on the RS485 line must be set consistently, and addresses cannot be repeated.

9.3.2 RTU mode

9.3.2.1 RTU communication frame structure

When a controller is set to use the RTU communication mode on a Modbus network, every byte (8 bits) in the message includes 2 hexadecimal characters (each includes 4 bits). Compared with the ASCII mode, the RTU mode can transmit more data with the same baud rate.

Code system

• 1 start bit

• 7 or 8 data bits; the minimum valid bit is transmitted first. Each frame domain of 8 bits includes 2 hexadecimal characters (0–9, A–F).

• 1 odd/even check bit; this bit is not provided if no check is needed.

• 1 stop bit (with check performed), 2 bits (without check)

Error detection domain

• Cyclic redundancy check (CRC)

The following table describes the data format.

11-bit character frame (Bits 1 to 8 are data bits)

Start bit	BIT1	BIT2	BIT3	BIT4	BIT5	BIT6	BIT7	BIT 8	Check bit	Stop bit

10-bit character frame (Bits 1 to 7 are data bits)

Start bit	BIT1	BIT2	BIT3	BIT4	BIT5	BIT6	BIT7	Check bit	Stop bit

In a character frame, only the data bits carry information. The start bit, check bit, and stop bit are used to facilitate the transmission of the data bits to the destination device. In practical applications, you must set the data bits, parity check bits, and stop bits consistently.

In RTU mode, the transmission of a new frame always starts from an idle time (the transmission time of 3.5 bytes). On a network where the transmission rate is calculated based on the baud rate, the transmission time of 3.5 bytes can be easily obtained. After the idle time ends, the data domains are transmitted in the following sequence: slave address, operation command code, data, and CRC check character. Each byte transmitted in each domain includes 2 hexadecimal characters (0–9, A–F). The network devices always monitor the communication bus. After receiving the first domain (address information), each network device identifies the byte. After the last byte is transmitted, a similar transmission interval (the transmission time of 3.5 bytes) is used to indicate that the transmission of the frame ends. Then, the transmission of a new frame starts.

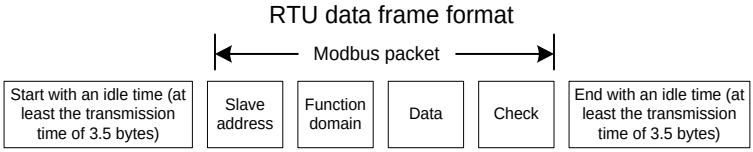

The information of a frame must be transmitted in a continuous data flow. If there is an interval greater than the transmission time of 1.5 bytes before the transmission of the entire frame is complete, the receiving device deletes the incomplete information, and mistakes the subsequent byte for the address domain of a new frame. Similarly, if the transmission interval between two frames is shorter than the transmission time of 3.5 bytes, the receiving device mistakes it for the data of the last frame. The CRC check value is incorrect due to the disorder of the frames, and thus a communication fault occurs.

The following table describes the standard structure of an RTU frame.

START (frame header)	T1-T2-T3-T4 (transmission time of 3.5 bytes)
ADDR (slave address domain)	Communication address: 0–247 (decimal system) (0 is the broadcast address)
CMD (function domain)	03H: read slave parameters 06H: write slave parameters
Data domain DATA (N-1) ... DATA (0)	Data of 2×N bytes, main content of the communication as well as the core of data exchanging
CRC CHK LSB	Detection value: CRC (16 bits)
CRC CHK MSB	
END (frame tail)	T1-T2-T3-T4 (transmission time of 3.5 bytes)

9.3.2.2 RTU communication frame error check methods

During the transmission of data, errors may occur due to various factors. Without check, the data receiving device cannot identify data errors and may make an incorrect response. The incorrect response may cause severe problems. Therefore, the data must be checked.

The check is implemented as follows: The transmitter calculates the to-be-transmitted data based on a specific algorithm to obtain a result, adds the result to the rear of the message, and transmits them together. After receiving the message, the receiver calculates the data based on the same algorithm to obtain a result, and compares the result with that transmitted by the transmitter. If the results are the same, the message is correct. Otherwise, the message is considered incorrect.

The error check of a frame includes two parts, namely, bit check on individual bytes (that is, odd/even check using the check bit in the character frame), and whole data check (CRC check).

Bit check on individual bytes (odd/even check)

You can select the bit check mode as required, or you can choose not to perform the check, which will affect the check bit setting of each byte.

Definition of even check: Before the data is transmitted, an even check bit is added to indicate whether the number of "1" in the to-be-transmitted data is odd or even. If it is even, the check bit is set to "0"; and if it is odd, the check bit is set to "1".

Definition of odd check: Before the data is transmitted, an odd check bit is added to indicate whether the number of "1" in the to-be-transmitted data is odd or even. If it is odd, the check bit is set to "0"; and if it is even, the check bit is set to "1".

For example, the data bits to be sent are "11001110", including five "1". If the even check is applied, the even check bit is set to "1"; and if the odd check is applied, the odd check bit is set to "0". During the transmission of the data, the odd/even check bit is calculated and placed in the check bit of the frame. The receiving device performs the odd/even check after receiving the data. If it finds that the odd/even parity of the data is inconsistent with the preset information, it determines that a communication error occurs.

CRC

A frame in the RTU format includes an error detection domain based on the CRC calculation. The CRC domain checks all the content of the frame. The CRC domain consists of two bytes, including 16 binary bits. It is calculated by the transmitter and added to the frame. The receiver calculates the CRC of the received frame, and compares the result with the value in the received CRC domain. If the two CRC values are not equal to each other, errors occur in the transmission.
During CRC, 0xFFFF is stored first, and then a process is invoked to process a minimum of 6 contiguous bytes in the frame based on the content in the current register. CRC is valid only for the 8-bit data in each character. It is invalid for the start, end, and check bits.
During the generation of the CRC values, the "exclusive or" (XOR) operation is performed on the each 8-bit character and the content in the register. The result is placed in the bits from the least significant bit (LSB) to the most significant bit (MSB), and 0 is placed in the MSB. Then, LSB is detected. If LSB is 1, the XOR operation is performed on the current value in the register and the preset value. If LSB is 0, no operation is performed. This process is repeated for 8 times. After the last bit (8th bit) is detected and processed, the XOR operation is performed on the next 8-bit byte and the current content in the register. The final values in the register are the CRC values obtained after operations are performed on all the bytes in the frame.

The calculation adopts the international standard CRC check rule. You can refer to the related standard CRC algorithm to compile the CRC calculation program as required.

The following example is a simple CRC calculation function for your reference (using the C programming language):

```
unsigned int crc_cal_value(unsigned char*data_value,unsigned char
data_length)
{
     int i;
     unsigned int crc_value=0xffff;
     while(data_length--)
     {
          crc_value^=*data_value++;
          for(i=0;i<8;i++)
          {
               if(crc_value&0x0001)
                    crc_value=(crc_value>>1)^0xa001;
               else
                    crc_value=crc_value>>1;
```

```
            }
        }
        return(crc_value);
}
```

In the ladder logic, CKSM uses the table look-up method to calculate the CRC value according to the content in the frame. The program of this method is simple, and the calculation is fast, but the ROM space occupied is large. Use this program with caution in scenarios where there are space occupation requirements on programs.

9.4 RTU command code and communication data

9.4.1 Command code 03H, reading N words (continuously up to 16 words)

The command code 03H is used by the master to read data from the VFD. The count of data to be read depends on the "data count" in the command. A maximum of 16 pieces of data can be read. The addresses of the read parameters must be contiguous. Each piece of data occupies 2 bytes, that is, one word. The command format is presented using the hexadecimal system (a number followed by "H" indicates a hexadecimal value). One hexadecimal value occupies one byte.

The 03H command is used to read information including the parameters and running status of the VFD.

For example, if the master reads two contiguous pieces of data (that is, to read content from the data addresses 0004H and 0005H) from the VFD whose address is 01H, the frame structures are described in the following.

RTU master command (from the master to the VFD)

START	T1-T2-T3-T4 (transmission time of 3.5 bytes)
ADDR (address)	01H
CMD (command code)	03H
Start address MSB	00H
Start address LSB	04H
Data count MSB	00H
Data count LSB	02H
CRC LSB	85H
CRC MSB	CAH
END	T1-T2-T3-T4 (transmission time of 3.5 bytes)

The value in START and END is "T1-T2-T3-T4 (transmission time of 3.5 bytes)", indicating that the RS485 needs to stay idle for at least the transmission time of 3.5 bytes. An idle time is required to distinguish on message from another to ensure that the two messages are not regarded as one.

"ADDR" is "01H", indicating that the command is sent to the VFD whose address is 01H. The ADDR information occupies one byte.

"CMD" is "03H", indicating that the command is used to read data from the VFD. The CMD information occupies one byte.

"Start address" means reading data from the address and it occupies two bytes with the MSB

on the left and LSB on the right.

"Data count" indicates the count of data to be read (unit: word). "Start address" is "0004H" and "Data count" is 0002H, indicating that data is to be read from the data addresses of 0004H and 0005H.

CRC check occupies two bytes, with the LSB on the left, and MSB on the right.

RTU slave response (from the VFD to the master)

START	T1-T2-T3-T4 (transmission time of 3.5 bytes)
ADDR	01H
CMD	03H
Number of bytes	04H
MSB of data in 0004H	13H
LSB of data in 0004H	88H
MSB of data in 0005H	00H
LSB of data in 0005H	00H
CRC LSB	7EH
CRC MSB	9DH
END	T1-T2-T3-T4 (transmission time of 3.5 bytes)

The definition of the response information is described as follows:

"ADDR" is "01H", indicating that the message is sent by the VFD whose address is 01H. The ADDR information occupies one byte.

"CMD" is "03H", indicating that the message is a VFD response to the 03H command from the master for reading data. The CMD information occupies one byte.

"Number of bytes" indicates the number of bytes between a byte (not included) and the CRC byte (not included). The value "04" indicates that there are four bytes of data between "Number of bytes" and "CRC LSB", that is, "MSB of data in 0004H", "LSB of data in 0004H", "MSB of data in 0005H", and "LSB of data in 0005H".

A piece of data contains two bytes, with the MSB on the left and LSB on the right. From the response, the data in 0004H is 1388H, and that in 0005H is 0000H.

CRC check occupies two bytes, with the LSB on the left, and MSB on the right.

9.4.2 Command code 06H, writing a word

This command is used by the master to write data to the VFD. One command can be used to write only one piece of data. It is used to modify the parameters and running mode of the VFD.

For example, if the master writes 5000 (1388H) to 0004H of the VFD whose address is 02H, the frame structure is as follows.

RTU master command (from the master to the VFD)

START	T1-T2-T3-T4 (transmission time of 3.5 bytes)
ADDR	02H
CMD	06H
MSB of data writing address	00H

LSB of data writing address	04H
MSB of data	13H
LSB of data	88H
CRC LSB	C5H
CRC MSB	6EH
END	T1-T2-T3-T4 (transmission time of 3.5 bytes)

RTU slave response (from the VFD to the master)

START	T1-T2-T3-T4 (transmission time of 3.5 bytes)
ADDR	02H
CMD	06H
MSB of data writing address	00H
LSB of data writing address	04H
MSB of data	13H
LSB of data	88H
CRC LSB	C5H
CRC MSB	6EH
END	T1-T2-T3-T4 (transmission time of 3.5 bytes)

Note: The sections 9.4.1 and 9.4.2 mainly describe the command formats. For the detailed application, see the examples in section 9.4.7.

9.4.3 Command code 10H, continuous writing

The command code 10H is used by the master to write data to the VFD. The quantity of data to be written is determined by "Data quantity", and a maximum of 16 pieces of data can be written.

For example, to write 5000 (1388H) and 50 (0032H) respectively to 0004H and 0005H of the VFD whose slave address is 02H, the frame structure is as follows.

RTU master command (from the master to the VFD)

START	T1-T2-T3-T4 (transmission time of 3.5 bytes)
ADDR	02H
CMD	10H
MSB of data writing address	00H
LSB of data writing address	04H
Data count MSB	00H
Data count LSB	02H
Number of bytes	04H
MSB of data to be written to 0004H	13H
LSB of data to be written to 0004H	88H
MSB of data to be written to 0005H	00H
LSB of data to be written to 0005H	32H
CRC LSB	C5H
CRC MSB	6EH
END	T1-T2-T3-T4 (transmission time of 3.5 bytes)

RTU slave response (from the VFD to the master)

START	T1-T2-T3-T4 (transmission time of 3.5 bytes)
ADDR	02H
CMD	10H
MSB of data writing address	00H
LSB of data writing address	04H
Data count MSB	00H
Data count LSB	02H
CRC LSB	C5H
CRC MSB	6EH
END	T1-T2-T3-T4 (transmission time of 3.5 bytes)

9.4.4 Address definition

This section describes the address definition of communication data. The addresses are used for controlling the running, obtaining the state information, and setting related function parameters of the VFD.

9.4.4.1 Function code address format rules

The address of a function code consists of two bytes, with the high-order byte on the left and low-order byte on the right. The high-order byte ranges from 00 to ffH, and the low-order byte also ranges from 00 to ffH. The high-order byte is the hexadecimal form of the group number before the dot mark, and low-order byte is that of the number behind the dot mark. Take P05.06 as an example: The group number is 05, that is, the MSB of the parameter address is the hexadecimal form of 05; and the number behind the dot mark is 06, that is, the LSB is the hexadecimal form of 05. Therefore, the function code address is 0506H in the hexadecimal form. For P10.01, the parameter address is 0A01H.

Function code	Name	Description	Setting range	Default	Modify
P10.00	Simple PLC mode	0: Stop after running once 1: Keep running with the final value after running once 2: Cyclic running	0–2	0	○
P10.01	Simple PLC memory selection	0: Without memory at power failure 1: With power-failure memory	0–1	0	○

Note:

- The parameters in the P99 group are set by the manufacturer and cannot be read or modified. Some parameters cannot be modified when the VFD is running; some cannot be modified regardless of the VFD status. Pay attention to the setting range, unit, and description of a parameter when modifying it.

- The service life of the Electrically Erasable Programmable Read-Only Memory (EEPROM) may be reduced if it is frequently used for storage. Some function codes do not need to be stored during communication. The application requirements can be met by modifying the value of the on-chip RAM, that is, modifying the MSB of the corresponding function code address from 0 to 1. For example, if P00.07 is not to be stored in the EEPROM, you need only to modify the value of the RAM, that is, set the address to 8007H. The address can be used only for writing data to the on-chip RAM, and it is invalid when used for reading data.

9.4.4.2 Addresses of other Modbus functions

In addition to modifying the parameters of the VFD, the master can also control the VFD, such as starting and stopping it, and monitoring the operation status of the VFD.

Table 9-1 Addresses of other function parameters

Function	Address	Data description	R/W
Communication-based control command	2000H	0001H: Run forward	R/W
		0002H: Run reversely	
		0003H: Jog forward	
		0004H: Jog reversely	
		0005H: Stop	
		0006H: Coast to stop	
		0007H: Fault reset	
		0008H: Stop jogging	
Communication-based setting address	2001H	Communication-based frequency setting (0–Fmax; unit: 0.01 Hz)	R/W
	2002H	PID reference (0–1000, in which 1000 corresponds to 100.0%)	
	2003H	PID feedback (0–1000, in which 1000 corresponds to 100.0%)	R/W
	2004H	Torque setting (-3000–3000, in which 1000 corresponds to 100.0% of the motor rated current)	R/W
	2005H	Upper limit setting of forward running frequency (0–Fmax; unit: 0.01 Hz)	R/W
	2006H	Upper limit setting of reverse running frequency (0–Fmax; unit: 0.01 Hz)	R/W
	2007H	Electromotive torque upper limit (0–3000, in which 1000 corresponds to 100.0% of the motor rated current)	R/W
	2008H	Braking torque upper limit. (0–3000, in which 1000 corresponds to 100.0% of the VFD rated current)	R/W

Function	Address	Data description	R/W
	2009H	Special CW Bit0–1 =00: Motor 1 =01: Motor 2 Bit2 =1 Enable speed/torque control switchover =0: Disable speed/torque control switchover Bit3 =1 Clear electricity consumption data =0: Keep electricity consumption data Bit4=1 Enable pre-excitation =0: Disable pre-excitation Bit5=1 Enable DC braking =0: Disable DC braking	R/W
	200AH	Virtual input terminal command (0x000–0x3FF) (Corresponding to S8/S7/S6/S5/Reserved/HDIA/S4/ S3/ S2/S1)	R/W
	200BH	Virtual output terminal command (0x00–0x0F) Corresponding to local RO2/RO1/Reserved/Y1	R/W
	200CH	Voltage setting (used when V/F separation is implemented) (0–1000, 1000 corresponding to 100.0% of the motor rated voltage)	R/W
	200DH	AO setting 1 (-1000–+1000, in which 1000 corresponding to 100.0%)	R/W
	200EH	AO setting 2 (-1000–+1000, in which 1000 corresponding to 100.0%)	R/W
VFD status word 1	2100H	0001H: Forward running	R
		0002H: Reverse running	
		0003H: Stopped	
		0004H: VFD in fault	
		0005H: POFF	
		0006H: Pre-exciting	
VFD status word 2	2101H	Bit0 =0: Not ready to run =1: Ready to run Bit1–2 =00: Motor 1 =01: Motor 2 Bit3 =0: Asynchronous motor =1: Synchronous motor Bit4 =0: No overload pre-alarm =1: Overload pre-alarm	R

Function	Address	Data description		R/W
		Bit5–Bit6 =00: Keypad-based control =01: Terminal-based control =10: Communication-based control Bit7 : Reserved Bit8 =0: Speed control =1: Torque control Bit9 =0: Non position control =1: Position control Bit10–Bit11 =0: Vector 0 =1: Vector 1 =2: Closed-loop vector = 3: Space voltage vector		
VFD fault code	2102H	See the description of fault types.		R
VFD identification code	2103H	K320C-----0x01c0		R
Running frequency	3000H	0–Fmax (Unit: 0.01Hz)	Compatible with CHF100A and CHV100 communication addresses	R
Set frequency	3001H	0–Fmax (Unit: 0.01Hz)		R
Bus voltage	3002H	0.0–2000.0V (Unit: 0.1V)		R
Output voltage	3003H	0–1200V (Unit: 1V)		R
Output current	3004H	0.0–3000.0A (Unit: 0.1A)		R
Rotational speed	3005H	0–65535 (Unit: 1RPM)		R
Output power	3006H	-300.0–300.0% (Unit: 0.1%)		R
Output torque	3007H	-250.0–250.0% (Unit: 0.1%)		R
Closed-loop setting	3008H	-100.0–100.0% (Unit: 0.1%)		R
Closed-loop feedback	3009H	-100.0–100.0% (Unit: 0.1%)		R
Input status	300AH	000–3F Corresponding to the local Reserved/HDIA/S4/S3/S2/S1		R
Output status	300BH	000–0F Corresponding to local RO2/RO1/Reserved/Y1		R
Analog input 1	300CH	0.00–10.00V (Unit: 0.01V)		R
Analog input 2	300DH	0.00–10.00V (Unit: 0.01V)		R
Analog input 3	300EH	-10.00–10.00V (Unit: 0.01V)		R
Analog input 4	300FH			R
Read input of HDIA high-speed pulse	3010H	0.00–50.00kHz (Unit: 0.01Hz)		R
Reserved	3011H			R
Read the actual step of	3012H	0–15		R

Function	Address	Data description		R/W
multi-step speed				
External length value	3013H	0–65535		R
External counting value	3014H	0–65535		R
Torque setting	3015H	-300.0–300.0% (Unit: 0.1%)		R
VFD identification code	3016H			R
Fault code	5000H			R

The Read/Write (R/W) characteristics indicate whether a function parameter can be read and written. For example, "Communication-based control command" can be written, and therefore the command code 06H is used to control the VFD. The R characteristic indicates that a function parameter can only be read, and W indicates that a function parameter can only be written.

Note: Some parameters in the preceding table are valid only after they are enabled. Take the running and stop operations as examples, you need to set "Running command channel" (P00.01) to "Communication", and set "Communication mode of running commands" (P00.02) to Modbus. For another example, when modifying "PID reference", you need to set "PID reference source" (P09.00) to Modbus communication.

The following table describes the encoding rules of device codes (corresponding to the identification code 2103H of the VFD).

8 MSBs	Meaning	8 LSBs	Meaning
0x01	GD	0xc0	K320C vector VFD

9.4.5 Fieldbus scale

In practical applications, communication data is represented in the hexadecimal form, but hexadecimal values cannot represent decimals. For example, 50.12 Hz cannot be represented in the hexadecimal form. In such cases, multiply 50.12 by 100 to obtain an integer 5012, and then 50.12 can be represented as 1394H in the hexadecimal form (5012 in the decimal form).

In the process of multiplying a non-integer by a multiple to obtain an integer, the multiple is referred to as a fieldbus scale.

The fieldbus scale depends on the number of decimal places in the value specified in "Setting range" or "Default". If there are n (for example, 1) decimal places in the value, the fieldbus scale m (then m=10) is the result of 10 to the power of n. Take the following table as an example.

Function code	Name	Description	Setting range	Default	Modify
P01.20	Wake-up-from-sleep delay	0.0–3600.0s (valid when P01.15 is 2)	0.00–3600.0	0.0s	○
P01.21	Power-off restart selection	0: Disable restart 1: Enable restart	0–1	0	○

The value specified in "Setting range" or "Default" contains one decimal place, and therefore the fieldbus scale is 10. If the value received by the upper computer is 50, the value of "Wake-up-from-sleep delay" of the VFD is 5.0 (5.0=50/10).

To set "Wake-up-from-sleep delay" to 5.0s through Modbus communication, you need first to multiply 5.0 by 10 according to the scale to obtain an integer 50, that is, 32H in the hexadecimal form, and then send the following write command:

01	06	01 14	00 32	49 E7
VFD address	Write command	Parameter address	Parameter data	CRC

After receiving the command, the VFD converts 50 into 5.0 based on the fieldbus scale, and then sets "Wake-up-from-sleep delay" to 5.0s.

For another example, after the upper computer sends the "Wake-up-from-sleep delay" parameter read command, the master receives the following response from the VFD:

01	03	02	00 32	39 91
VFD address	Read command	2-byte data	Parameter data	CRC

The parameter data is 0032H, that is, 50, and therefore 5.0 is obtained based on the fieldbus scale (50/10=5.0). In this case, the master identifies that "Wake-up-from-sleep delay" is 5.0s.

9.4.6 Error message response

Operation errors may occur in communication-based control. For example, some parameters can only be read, but a write command is sent. In this case, the VFD returns an error message response.

Error message responses are sent from the VFD to the master. The following table lists the codes and definitions of the error message responses.

Code	Name	Definition
01H	Invalid command	The command code received by the host controller is not allowed to be executed. The possible causes are as follows: • The function code is applicable only on new devices and is not implemented on this device. • The slave is in faulty state when processing this request.
02H	Invalid data address	For the VFD, the data address in the request of the upper computer is not allowed. In particular, the combination of the register address and the number of the to-be-sent bytes is invalid.
03H	Invalid data value	The received data domain contains a value that is not allowed. The value indicates the error of the remaining structure in the combined request. **Note:** It does not mean that the data item submitted for storage in the register includes a value unexpected by the program.
04H	Operation failure	The parameter is set to an invalid value in the write operation. For example, a function input terminal cannot be set repeatedly.
05H	Incorrect password	The password entered in the password verification address is different from that set in P07.00.

Code	Name	Definition
06H	Incorrect data frame	The data frame sent from the upper computer is incorrect in the length, or in the RTU format, the value of the CRC check bit is inconsistent with the CRC value calculated by the lower computer.
07H	Parameter read-only	The parameter to be modified in the write operation of the upper computer is a read-only parameter.
08H	Parameter cannot be modified in running	The parameter to be modified in the write operation of the upper computer cannot be modified during the running of the VFD.
09H	Password protection	If the upper computer does not provide the correct password to unlock the system to perform a read or write operation, the error of "system being locked" is reported.

When returning a response, the slave uses a function code domain and fault address to indicate whether it is a normal response (no error) or exception response (an error occurs). In a normal response, the slave returns the corresponding function code and data address or sub-function code. In an exception response, the slave returns a code that is equal to a normal code, but the first bit is logic 1.

For example, if the master sends a request message to a slave for reading a group of function code address data, the following code is generated:

0 0 0 0 0 0 1 1 (03H in the hexadecimal form)

In a normal response, the slave returns the same function code. In an exception response, the slave returns the following code:

1 0 0 0 0 0 1 1 (83H in the hexadecimal form)

In addition to the modification of the code, the slave returns a byte of exception code that describes the cause of the exception. After receiving the exception response, the typical processing of the master is to send the request message again or modify the command based on the fault information.

For example, to set the "Channel of running commands" (P00.01, the parameter address is 0000H) to 03 for the VFD whose address is 01H, the command is as follows:

01	06	00 01	00 03	98 0B
VFD address	Write command	Parameter address	Parameter data	CRC

However, the "Running command channel" ranges from 0 to 2. The value 3 is out of the setting range. In this case, the VFD returns an error message response as shown in the following:

01	86	04	43 A3
VFD address	Exception response code	Error code	CRC

The exception response code 86H (generated based on the highest-order bit "1" of the write command 06H) indicates that it is an exception response to the write command (06H). The error code is 04H, which indicates "Operation failure".

9.4.7 Read/Write operation examples

For the formats of the read and write commands, see section 9.4.1 and 9.4.2.

9.4.7.1 Read command 03H examples

Example 1: Read state word 1 of the VFD whose address is 01H. According to the table of other Modbus function addresses in Table 9-1, the parameter address of status word 1 of the VFD is 2100H.

The read command transmitted to the VFD is as follows:

01	03	21 00	00 01	8E 36
VFD address	Read command	Parameter address	Data quantity	CRC

Assume that the following response is returned:

01	03	02	00 03	F8 45
VFD address	Read command	Number of bytes	Data content	CRC

The data content returned by the VFD is 0003H, which indicates that the VFD is in the stopped state.

Example 2: View information about the VFD whose address is 03H, including "Type of present fault" (P07.27) to "Type of 5th-last fault" (P07.32) of which the parameter addresses are 071BH to 0720H (contiguous 6 parameter addresses starting from 071BH).

The command transmitted to the VFD is as follows:

03	03	07 1B	00 06	B5 59
VFD address	Read command	Start address	6 parameters in total	CRC

Assume that the following response is returned:

03	03	0C	00 23	00 23	00 23	00 23	00 23	00 23	5F D2
VFD address	Read command	Number of bytes	Type of current fault	Type of last fault	Type of last but one fault	Type of last but two fault	Type of last but three fault	Type of last but four fault	CRC

From the returned data, we can see that all the fault types are 0023H, that is, 35 in the decimal form, which means the maladjustment fault (STo).

9.4.7.2 Write command 06H examples

Example 1: Set the VFD whose address is 03H to be forward running. According to the table of other function parameters Table 9-1, the address of "Communication-based control command"

is 2000H, and 0001H indicates forward running. See the following table.

Function	Address	Data description	R/W
Communication-based control command	2000H	0001H: Run forward	R/W
		0002H: Run reversely	
		0003H: Jog forward	
		0004H: Jog reversely	
		0005H: Stop	
		0006H: Coast to stop	
		0007H: Fault reset	
		0008H: Stop jogging	

The command sent from the master is as follows:

03	06	20 00	00 01	42 28
VFD address	Write command	Parameter address	Forward running	CRC

If the operation is successful, the following response (same as the command transmitted from the master) is returned:

03	06	20 00	00 01	42 28
VFD address	Write command	Parameter address	Forward running	CRC

Example 2: Set the max. output frequency to 100 Hz for the VFD with the address of 03H.

Function code	Name	Description	Setting range	Default	Modify
P00.03	Max. output frequency	P00.04–400.00Hz	100.00–400.00	50.00Hz	◎

According to the number of decimal places, the fieldbus scale of the "Max. output frequency" (P00.03) is 100. Multiply 100 Hz by 100. The value 10000 is obtained, and it is 2710H in the hexadecimal form.

The command sent from the master is as follows.

03	06	00 03	27 10	62 14
VFD address	Write command	Parameter address	Parameter data	CRC

If the operation is successful, the following response (same as the command transmitted from the master) is returned:

03	06	00 03	27 10	62 14
VFD address	Write command	Parameter address	Parameter data	CRC

Note: In the preceding command description, spaces are added to a command just for explanatory purposes. In practical applications, no space is required in the commands.

9.4.7.3 Example of continuously writing command 10H

Example 1: Set the VFD whose address is 01H to be forward running at the frequency of 10 Hz. Refer to Table 9-1, the address of "Communication-based control command" is 2000H, 0001H indicates forward running, and the address of "Communication-based value setting" is 2001H, as shown in the following figure. 10 Hz is 03E8H in the hexadecimal form

.

Function	Address	Data description	R/W
Communication-based control command	2000H	0001H: Run forward	R/W
		0002H: Run reversely	
		0003H: Jog forward	
		0004H: Jog reversely	
		0005H: Stop	
		0006H: Coast to stop	
		0007H: Fault reset	
		0008H: Stop jogging	
Communication-based setting address	2001H	Communication-based frequency setting (0–Fmax; unit: 0.01 Hz)	R/W
	2002H	PID reference (0–1000, in which 1000 corresponds to 100.0%)	

In the actual operation, set P00.01 to 2 and P00.06 to 8.

The command sent from the master is as follows:

01	10	20 00	00 02	04	00 01	03 E8	3B 10
VFD address	Continuous write command	Parameter address	Parameter quantity	Number of bytes	Froward running	10 Hz	CRC

If the operation is successful, the following response is returned:

01	10	20 00	00 02	4A 08
VFD address	Continuous write command	Parameter address	Parameter quantity	CRC

Example 2: Set "Acceleration time" of the VFD whose address is 01H to 10s, and "Deceleration time" to 20s.

Function code	Name	Description	Default	Modify
P00.11	ACC time 1	P00.11 and P00.12 setting range: 0.0–3600.0s	Depends on model	○
P00.12	DEC time 1		Depends on model	○

The address of P00.11 is 000B, 10s is 0064H in the hexadecimal form, and 20s is 00C8H in the hexadecimal form.

The command sent from the master is as follows:

01	10	00 0B	00 02	04	00 64	00 C8	F2 55
VFD address	Continuous write command	Parameter address	Parameter quantity	Number of bytes	10s	20s	CRC

If the operation is successful, the following response is returned:

01	10	00 0B	00 02	30 0A
VFD address	Continuous write command	Parameter address	Parameter quantity	CRC

Note: In the preceding command description, spaces are added to a command just for explanatory purposes. In practical applications, no space is required in the commands.

9.4.7.4 Example of Modbus communication commissioning

A PC is used as the host, an RS232-RS485 converter is used for signal conversion, and the PC serial port used by the converter is COM1 (an RS232 port). The upper computer commissioning software is the serial port commissioning assistant Commix, which can be downloaded from the Internet. Download a version that can automatically execute the CRC check function. The following figure shows the interface of Commix.



First, set the serial port to **COM1**. Then, set the baud rate consistently with P14.01. The data bits, check bits, and stop bits must be set consistently with P14.02. If the RTU mode is selected, you need to select the hexadecimal form **Input HEX**. To set the software to automatically execute the CRC function, you need to select **ModbusRTU** ModbusRTU, select **CRC16 (MODBU SRTU)**, and set the start byte to **1**. After the auto CRC check function is enabled, do not enter CRC information in commands. Otherwise, command errors may occur due to repeated CRC check.

The commissioning command to set the VFD whose address is 03H to be forward running is as follows:

03	06	20 00	00 01	42 28
VFD address	Write command	Parameter address	Forward running	CRC

Note:

- Set the address (P14.00) of the VFD to 03.
- Set "Channel of running commands" (P00.01) to "Communication", and set "Communication channel of running commands" (P00.02) to the Modbus communication channel.
- Click Send. If the line configuration and settings are correct, a response transmitted by the VFD is received as follows:

03	06	20 00	00 01	42 28
VFD address	Write command	Parameter address	Forward running	CRC

9.5 Common communication faults

Common communication faults include the following:

- No response is returned.
- The VFD returns an exception response.

Possible causes of no response include the following:

- The serial port is set incorrectly. For example, the adapter uses the serial port COM1, but COM2 is selected for the communication.
- The settings of the baud rates, data bits, stop bits, and check bits are inconsistent with those set on the VFD.
- The positive pole (+) and negative pole (-) of the RS485 bus are connected reversely.
- The resistor connected to 485 terminals on the terminal block of the VFD is set incorrectly.

Appendix A Expansion card

A.1 Model definition

EC-TX 5 03-05 B

① ② ③ ④ ⑤ ⑥

Field	Field description	Naming example	Remarks
①	Product category	EC: Expansion card	
②	Card category	TX: communication card IO: I/O card	
③	Version category	Indicates the generation of a version category by using odd numbers, for example, 1, 3, 5, and 7 indicate the 1st, 2nd, 3rd and 4th generations of version.	
④	Product code (communication card)	01: Bluetooth card 02: WiFi card 03: PROFIBUS-DP 04: Ethernet communication card 05: CANopen communication card 06: Reserved 07: BACnet communication card 08: Reserved 09: PROFINET communication card 10: Reserved 11: CAN master/slave control communication card 12: MECHATROLINK communication card 13: MEMOBUS communication card 14: CC- LINK communication card 15: Modbus TCP communication card 16: CC-LINK IE communication card 17: POWERLINK communication card 18: Reserved 1 19: Reserved 2	The value options increase by 1 in sequence, starting from 01. The naming relationship depends on the board category.
	Product code (I/O card)	01: Multiple-function I/O card 02: Multiple-function I/O card (with the temperature detection function) 03: Reserved	
	Product code (IC card)	01: GPRS card 02: 4G card 03: Reserved	

Field	Field description	Naming example	Remarks
⑤	Working power	00: Passive (Empty by default) 05: 5V 12: 12–15V 24: 24V	If multiple voltage classes are supported, the highest class is marked. For example, EC-PG305-12 supports 5V and 12V.
⑥	Version description	Used to distinguish the hardware/structure. A: Standard version (Empty by default) B: B version	

The following table describes expansion cards that the VFD supports. The expansion cards are optional and need to be purchased separately.

Name	Model	Specifications
I/O expansion card	EC-IO501-00	• 4 digital inputs • 1 digital output • 1 analog input • 1 analog output • 2 relay outputs: 1 double-contact output, and 1 single-contact output
	EC-IO503-00	• 2 digital inputs and 6 relay outputs
PROFIBUS-DP communication card	EC-TX503D	• Supporting the PROFIBUS-DP protocol
CAN multi-protocol communication card	EC-TX505C	• Based on the CAN2.0A physical layer • Supporting the CANopen protocol
PROFINET communication card	EC-TX509C	• Supporting the PROFINET protocol

A.2 Dimensions and installation

All expansion cards are of the same dimensions (108x39mm) and can be installed in the same way.

All the VFD models provide two expansion card slots. Note the following when installing or uninstalling an expansion card:

- Ensure that no power is applied before installing the expansion card.
- To ease wiring, comply with the following although any supported expansion card at either slot can be identified:

VFD power	Installation precautions
1.5–7.5kW	Install a communication card at slot 2. Before installing a DP communication card, remove the knock-off hole cover from the middle casing and lower casing.
11–500kW	It is recommended to install a DP communication card at slot 1.

The following figure shows the installation diagram and the VFD with expansion cards installed.

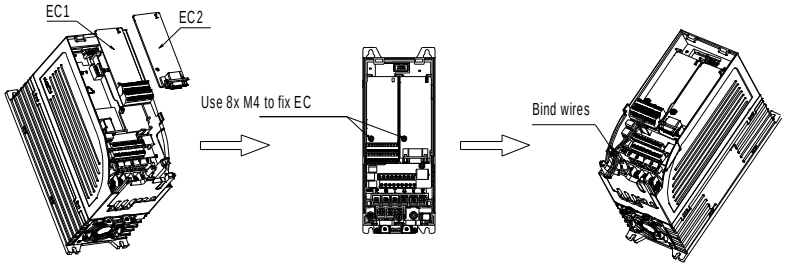

Figure A-1 1.5–7.5kW VFDs with expansion cards installed

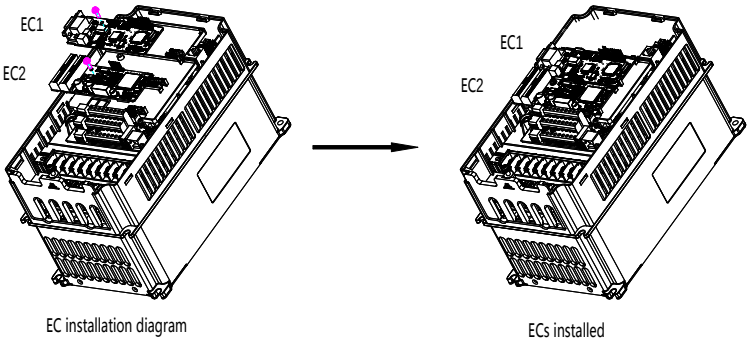

Figure A-2 11–500kW VFDs with expansion cards installed

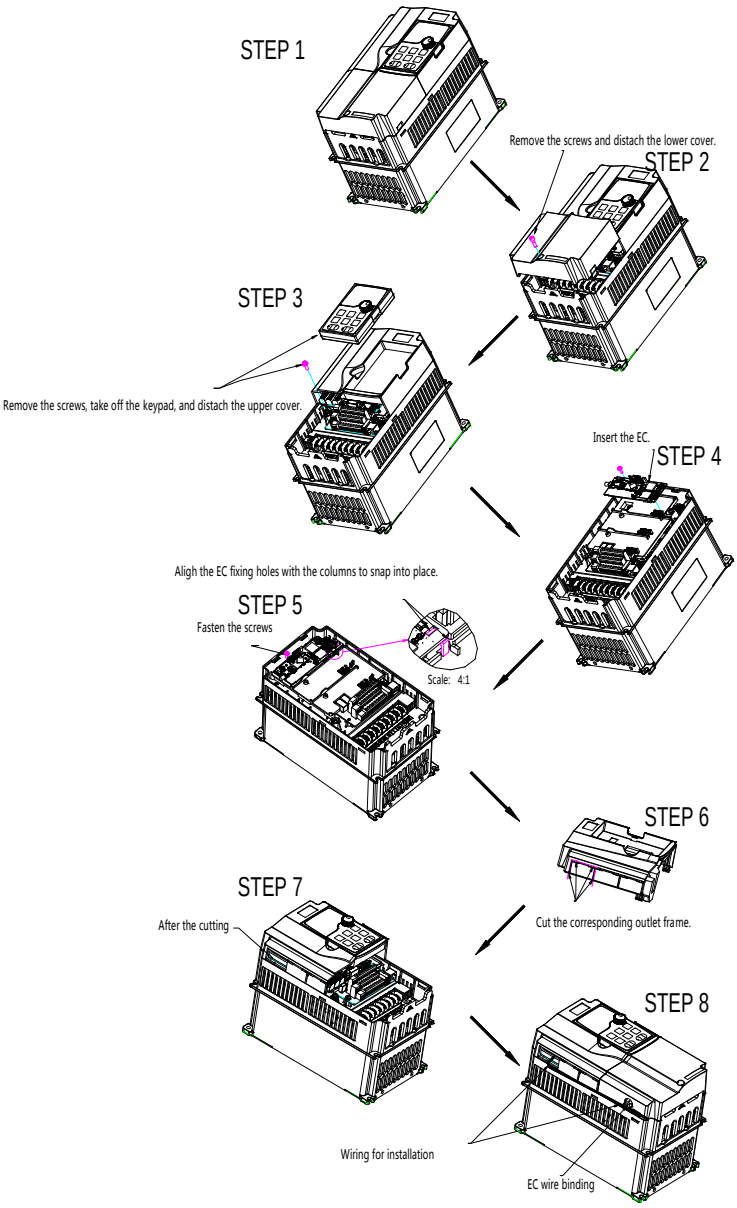

Figure A-3 Expansion card installation procedure

A.3 Wiring

1. Ground a shielded cable as follows:

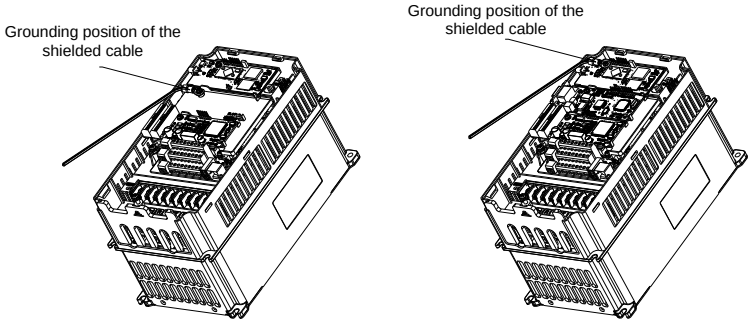

Figure A-4 Expansion card grounding cable connection

2. Wire an expansion card as follows:

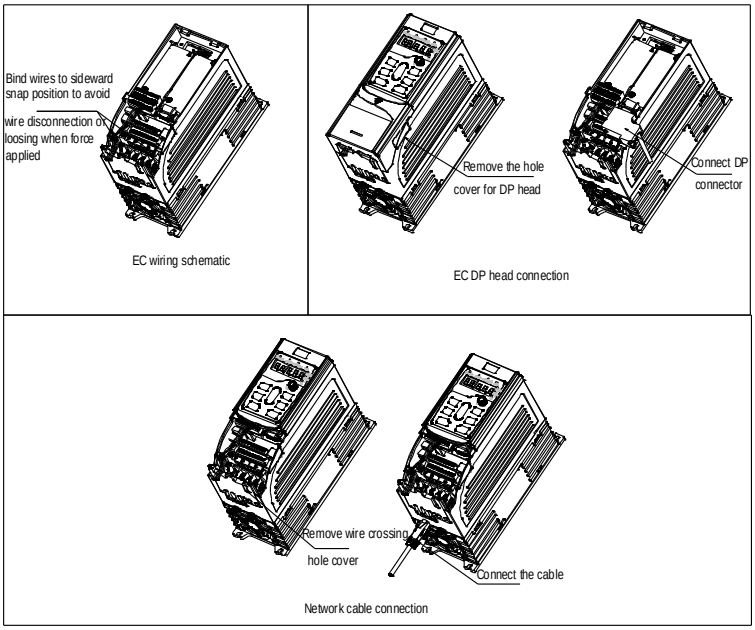

Figure A-5 Expansion card wiring for 1.5–7.5kW VFDs

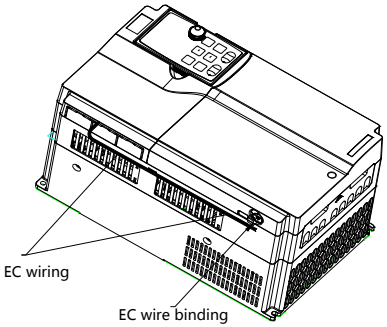

Figure A-6 Expansion card wiring for 11–500kW VFDs

A.4 I/O cards

A.4.1 EC-IO501-00

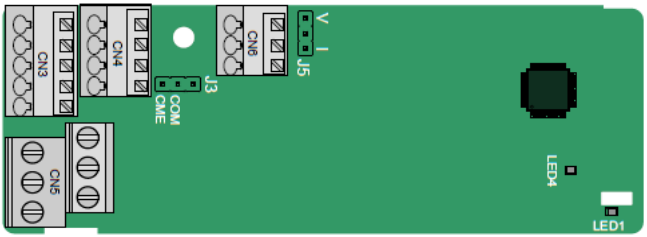

CME and COM are shorted through J3 before delivery, and J5 is the jumper for selecting the output type (voltage or current) of AO2.

The terminals are arranged as follows:

AI3	AO2	GND

COM	CME	Y2	S5	
PW	+24V	S6	S7	S8

RO3A	RO3B	RO3C		
	RO4A		RO4C	

Indicator definition:

Indicator	Definition	Function
LED1	Status indicator	On: The expansion card is establishing a connection with the control board. Blinking (On: 500ms; Off: 500ms): The expansion card is properly connected to the control board. Off: The expansion card is disconnected from the control board.
LED4	Power indicator	On: The expansion card is powered on. Off: The expansion card is not powered on.

EC-IO501-00 can be used in scenarios where the I/O interfaces of VFD cannot meet the application requirements. It can provide 4 digital inputs, 1 digital output, 1 analog input, 1 analog output, and two relay outputs. It is user-friendly, providing relay outputs through European-type screw terminals and other inputs and outputs through spring terminals.

EC-IO501-00 terminal functions:

Category	Terminal	Name	Description
Power supply	PW	External power	Used to provide input digital working power from the external to the internal. Voltage range: 12–24V PW and +24V have been short connected before delivery.
AI and AO	AI3—GND	Analog input 1	• Input range: For AI3, 0(2)–10V or 0(4)–20mA • Input impedance: 20kΩ for voltage input; 250Ω for current input • Whether voltage or current is used for input is set through the corresponding function code. • Resolution: 5mV when 10V corresponds to 50Hz • Error: ±0.5% when input is above 5V or 10mA at 25°C
	AO2—GND	Analog output 1	• Output range: 0(2)–10V or 0(4)–20mA • Whether voltage or current is used for output is set through the jumper J5 • Error: ±0.5% when output is above 5 V or 10 mA at 25°C
Digital input/output	S5—COM	Digital input 1	• Internal impedance: 3.3kΩ • 12–30V voltage input is acceptable • Bi-direction input terminal • Max. input frequency: 1kHz
	S6—COM	Digital input 2	
	S7—COM	Digital input 3	
	S8—COM	Digital input 4	
	Y2—CME	Digital output	• Switch capacity: 200mA/30V • Output frequency range: 0-1kHz • The terminal CME and COM are shorted through J3 before delivery
Relay output	RO3A	NO contact of relay 3	• Contact capacity: 3A/AC250V, 1A/DC30V • Cannot be used as high frequency digital output.
	RO3B	NC contact of relay 3	
	RO3C	Common contact of relay 3	
	RO4A	NO contact of relay 4	
	RO4C	Common contact of relay 4	

A.4.2 EC-IO503-00

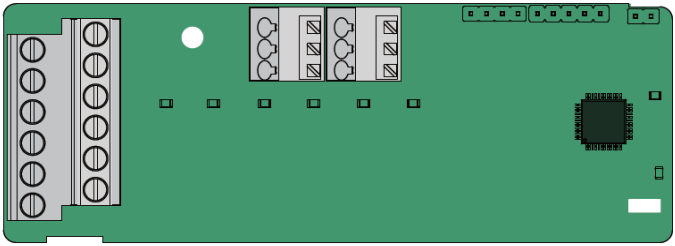

The terminals of EC-IO503-00 are arranged as follows:

COM	S9	S10

COM	PW	+24V

RO5A	RO5C	RO6A	RO6C	RO7A	RO7C
RO8A	RO8C	RO9A	RO9C	RO10A	RO10C

Indicator definition:

Indicator	Definition	Function
LED1	Status indicator	On: RO5 is closed. Off: RO5 is opened.
LED2	Status indicator	On: RO6 is closed. Off: RO6 is opened.
LED3	Status indicator	On: RO7 is closed. Off: RO7 is opened.
LED4	Status indicator	On: RO8 is closed. Off: RO8 is opened.
LED5	Status indicator	On: RO9 is closed. Off: RO9 is opened.
LED6	Status indicator	On: RO10 is closed. Off: RO10 is opened.
LED7	Power indicator	On: The expansion card is powered on. Off: The expansion card is not powered on.
LED8	Status indicator	On: The communication card is establishing a connection with the control board. Blink (ON: 500ms; OFF: 500ms): The communication card is properly connected to the control board. Off: The communication card is disconnected from the control board.

EC-IO503-00 can be used in scenarios where the I/O interfaces of VFD cannot meet the application requirements. It can provide 2 digital inputs and 6 relay outputs. It is user-friendly, providing relay outputs through European-type screw terminals and other inputs and outputs through spring terminals.

EC-IO503-00 terminal functions:

Category	Terminal	Name	Description
Power supply	COM	External power	Used to provide I/O expansion card working power from the external to the internal. Voltage: +24V PW and +24V are shorted during use.
	PW		
	+24V		
Digital input	S9—COM	Digital input 1	• Internal impedance: 3.3kΩ • 12—30V voltage input is acceptable • Max. input frequency: 1kHz
	S10—COM	Digital input 2	
Relay output	RO5A	NO contact of relay 5	• Contact capacity: 3A/AC250V, 1A/DC30V • Cannot be used as high frequency digital output
	RO5C	NO contact of relay 5	
	RO6A	NO contact of relay 6	
	RO6C	NO contact of relay 6	
	RO7A	NO contact of relay 7	
	RO7C	NO contact of relay 7	
	RO8A	NO contact of relay 8	
	RO8C	NO contact of relay 8	
	RO9A	NO contact of relay 9	
	RO9C	NO contact of relay 9	
	RO10A	NO contact of relay 10	
	RO10C	NO contact of relay 10	

A.5 Communication cards

A.5.1 PROFIBUS-DP communication card (EC-TX503D)

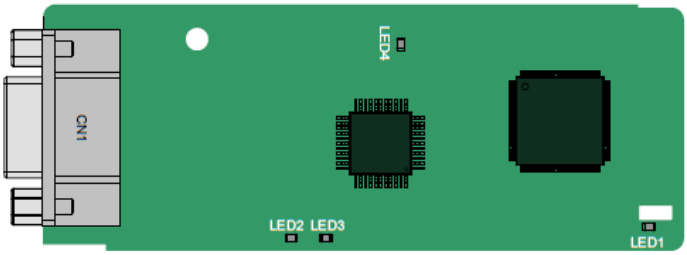

CN1 is a 9-pin D-type connector, as shown in the following figure.

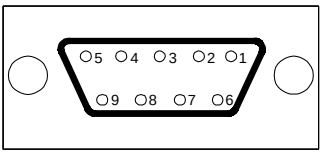

Connector pin		Description
1	-	Unused
2	-	Unused
3	B-Line	Data+ (twisted pair 1)
4	RTS	Request sending
5	GND_BUS	Isolation ground
6	+5V BUS	Isolated power supply of 5 V DC
7	-	Unused
8	A-Line	Data- (twisted pair 2)
9	-	Unused
Housing	SHLD	PROFIBUS cable shielding line

+5V and GND_BUS are bus terminators. Some devices, such as the optical transceiver (RS485), may need to obtain power through these pins.

Some devices use RTS to determine the sending and receiving directions. In normal applications, only A-Line, B-Line, and the shield layer need to be used.

Indicator definition:

Indicator	Definition	Function
LED1	Status indicator	On: The communication card is establishing a connection with the control board. Blink (ON: 500ms; OFF: 500ms): The communication card is properly connected to the control board. Off: The communication card is disconnected from the control board.
LED2	Online indicator	This indicator is on when the communication card is online and data exchange can be performed. It is off when the communication card is not in the online state.
LED3	Offline/Fault indicator	This indicator is on when the communication card is offline and data exchange cannot be performed. It blinks when the communication card is not in the offline state. It blinks at the frequency of 1 Hz when a configuration error occurs: The length of the user parameter data set during the initialization of the communication card is different from that during the network configuration. It blinks at the frequency of 2 Hz when user

Indicator	Definition	Function
		parameter data is incorrect: The length or content of the user parameter data set during the initialization of the communication card is different from that during the network configuration. It blinks at the frequency of 4Hz when an error occurs in the ASIC initialization of PROFIBUS communication. It is off when the diagnosis function is disabled.
LED4	Power indicator	On: The expansion card is powered on. Off: The expansion card is not powered on.

For details, see the *Communication Card Operation Manual*.

A.5.2 CAN multi-protocol communication card (EC-TX505C)

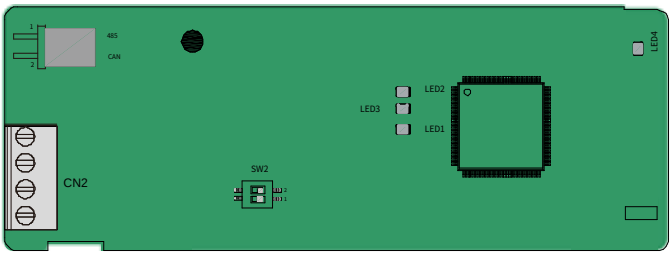

Table A–1 EC-TX505C communication card parts

Marking	Name	Description
PGND	Isolation ground	Isolation ground
PE	Shielded cable	CAN bus shielding
CANH	CAN positive input	CAN bus high level signal
CANL	CAN negative input	CAN bus low level signal
485	485 terminal resistor switch	RS485+ and RS485- are not connected to a terminal resistor.
		RS485+ and RS485- are connected to a terminal resistor of 120Ω.
CAN	CAN terminal resistor switch	CAN_H and CAN_L are not connected to a terminal resistor.
		CAN_H and CAN_L are connected to a terminal resistor of 120Ω.

Note: Before power on, please select the protocol type by setting the switch SW2 as follows:

Switch SW2		
1	**2**	**Protocol type**
OFF	OFF	CANopen
ON	OFF	CAN master/slave
Indicator	**Definition**	**Function**
LED1	Status indicator	On: The communication card is establishing a connection with the control board. Blink (ON: 500ms; OFF: 500ms): The communication card is properly connected to the control board. Off: The communication card is disconnected from the control board.
LED2	Run indicator	On: The communication card is running. Blink (ON: 500ms; OFF: 500ms): The communication card is in the pre-operation state. Off: A fault occurs. The reset pin of the communication card and the power supply are not properly connected. The expansion card is in the stopped state.
LED3	Fault indicator	On: The CAN controller bus is off, a fault occurs on the VFD, or a received frame is missed or an error occurs during frame receiving. Off: The communication card is in the working state.
LED4	Power indicator	On: The expansion card is powered on. Off: The expansion card is powered off.

For details, see the *Communication Card Operation Manual*.

A.5.3 PROFINET communication card (EC-TX509C)

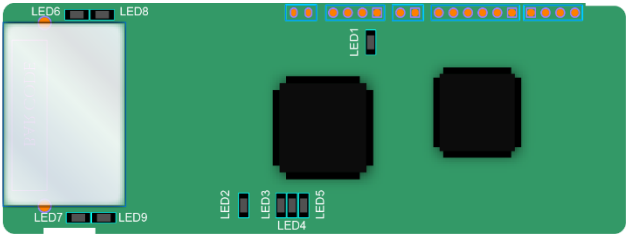

The terminal CN2 adopts standard RJ45 interfaces, which are in the dual design, and the two RJ45 interfaces are not distinguished from each other and can be interchangeably inserted. They are arranged as follows:

Pin	Name	Description
1	TX+	Transmit Data+
2	TX-	Transmit Data-
3	RX+	Receive Data+
4	n/c	Not connected
5	n/c	Not connected
6	RX-	Receive Data-

Pin	Name	Description
7	n/c	Not connected
8	n/c	Not connected

Indicator definition:

The PROFINET communication card has 9 indicators, among which LED1 is the power indicator, LED2–5 are the communication status indicators of the communication card, and LED6–9 are the status indicators of the network port.

Indicator	Color	Status	Description
LED1	Green		3.3V power indicator
LED2 (Bus status indicator)	Red	On	No network connection
		Blinking	The connection to the network cable between the PROFINET controller is OK, but the communication is not established.
		Off	Communication with the PROFINET controller has been established.
LED3 (System fault indicator)	Green	On	PROFINET diagnosis exists.
		Off	No PROFINET diagnosis.
LED4 (Slave ready indicator)	Green	On	TPS-1 protocol stack has started.
		Blinking	TPS-1 waits for MCU initialization.
		Off	TPS-1 protocol stack does not start.
LED5 (Maintenance status indicator)	Green		Manufacturer-specific, depending on the characteristics of the device
LED6/7 (Network port status indicator)	Green	On	The PROFINET communication card and PC/PLC have been connected by using a network cable.
		Off	The connection between the PROFINET communication card and PC/PLC has not been established.
LED8/9 (Network port communication indicator)	Green	On	The PROFINET communication card and PC/PLC are communicating.
		Off	The PROFINET communication card and PC/PLC have no communication yet.

Electrical connection:

The PROFINET communication card adopts standard RJ45 interfaces, which can be used in a linear network topology and a star network topology. The linear network topology electrical connection diagram is shown in Figure A-7.

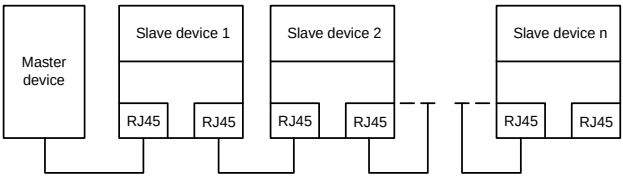

Figure A-7 Linear network topology electrical connection

Note: For the star network topology, you need to prepare PROFINET switches.

The star network topology electrical connection diagram is shown in Figure A-8.

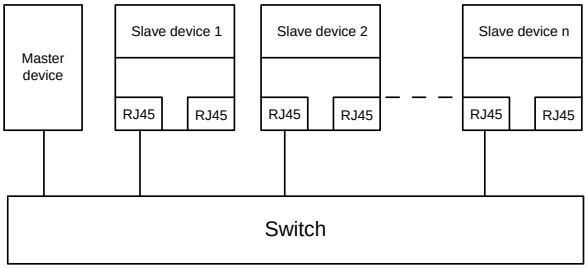

Figure A-8 Star network topology electrical connection

Appendix B Technical data

B.1 What this chapter contains

This chapter describes the technical data of the VFD and its compliance to CE and other quality certification systems.

B.2 Derated application

B.2.1 Capacity

Choose a VFD model based on the rated current and power of the motor. To endure the rated power of the motor, the rated output current of the VFD must be larger or equal to the rated current of the motor. The rated power of the VFD must be higher or equal to that of the motor.

Note:

- The rated capacity is the capacity at the ambient temperature of 40°C.
- You need to check and ensure that the power flowing through the common DC connection in the common DC system does not exceed the rated power of the motor.

B.2.2 Derating

If the ambient temperature at the VFD installation site exceeds 40°C, the VFD installation site altitude exceeds 1000m, a heat sink cover is used, or the carrier frequency is higher than the recommended (see P00.14 for the recommended frequency), the VFD needs to be derated.

B.2.2.1 Derating due to temperature

When the temperature ranges from +40°C to +50°C, the rated output current is derated by 1% for each increased 1°C. For the actual derating, see the following figure.

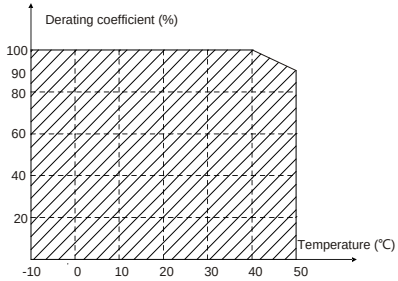

Note: It is not recommended to use the VFD at an environment with the temperature higher than 50°C. If you do, you shall be held accountable for the consequences caused.

B.2.2.2 Derating due to altitude

When the altitude of the site where the VFD is installed is lower than 1000 m, the VFD can run at the rated power. When the altitude exceeds 1000m, derate by 1% for every increase of 100m.

B.2.2.3 Derating due to carrier frequency

The carrier frequency of the VFD varies with power class. The VFD rated power is defined based on the carrier frequency factory setting. If the carrier frequency exceeds the factory setting, the VFD power is derated by 10% for each increased 1 kHz.

B.3 Grid specifications

Grid voltage	AC 3PH 380V–480V
Short-circuit capacity	According to the definition in IEC 61439-1, the maximum allowable short-circuit current at the incoming end is 100 kA. Therefore, the VFD is applicable to scenarios where the transmitted current in the circuit is no larger than 100 kA when the VFD runs at the maximum rated voltage.
Frequency	50/60 Hz±5%, with a maximum change rate of 20%/s

B.4 Motor connection data

Motor type	Asynchronous induction motor or permanent-magnet synchronous motor
Voltage	0–U1 (motor rated voltage), 3PH symmetrical, Umax (VFD rated voltage) at the field-weakening point
Short-circuit protection	The motor output short-circuit protection meets the requirements of IEC 61800-5-1.
Frequency	0–400 Hz
Frequency resolution	0.01 Hz
Current	See section 3.6 Product ratings.
Power limit	1.1 times of the motor rated power
Field-weakening point	10–400 Hz
Carrier frequency	2, 4, 8, 12, or 15 kHz

B.4.1 EMC compatibility and motor cable length

The VFD supports the built-in and external filter solutions to meet IEC/EN 61800-3 Second environment (C3) and First environment (C2) EMC requirements. According to the 4kHz carrier frequency setting, the motor cable length requirements are as follows:

VFD power range	Supported motor cable length (unit: m)			
	Built-in		External	
	Second environment category C3	First environment category C2	Second environment category C3	First environment category C2
1.5–22kW	20	20	/	1
30–132kW	30	/	/	1(10)
160–500kW	30	/	/	1

Note:

The 1.5–22kW models are supplied only with the built-in C2 filters to meet both C3 and C2 EMC requirements.

For 1.5–500kW models, we provide self-developed FLT filters which can meet the C2 EMC requirements under the condition of 1m motor cable.

For 30–132kW models, you can choose SCHAFFNER filters recommended by us to meet the C2 EMC requirements under the condition of 20m motor cable. For more details about the models, refer to D.7 Filters.

B.5 Application standards

The following table describes the standards that VFDs comply with.

EN/ISO 13849-1	Safety of machinery—Safety-related parts of control systems—Part 1: General principles for design
IEC/EN 60204-1	Safety of machinery. Electrical equipment of machines. Part 1: General requirements
IEC/EN 62061	Safety of machinery—Safety-related functional safety of electrical, electronic, and programmable electronic control systems
IEC/EN 61800-3	Adjustable speed electrical power drive systems. Part 3: EMC requirements and specific test methods
IEC/EN 61800-5-1	Adjustable speed electrical power drive systems—Part 5-1: Safety requirements—Electrical, thermal and energy

B.5.1 CE marking

The CE marking on the VFD nameplate indicates that the VFD is CE-compliant, meeting the regulations of the European low-voltage directive (2014/35/EU) and EMC directive (2014/30/EU).

B.5.2 EMC compliance declaration

European union (EU) stipulates that the electric and electrical devices sold in Europe cannot generate electromagnetic disturbance that exceeds the limits stipulated in related standards, and can work properly in environments with certain electromagnetic interference. The EMC product standard (EN 61800-3) describes the EMC standards and specific test methods for adjustable speed electrical power drive systems. Our products have been compliant with these regulations.

B.6 EMC regulations

The EMC product standard (EN 61800-3) describes the EMC requirements on VFDs.

Application environment categories:

First environment: Civilian environment, including application scenarios where VFDs are directly connected to the civil power supply low-voltage grids without intermediate transformers.

Second environment: All locations outside a residential area.

VFD categories:

C1: Rated voltage lower than 1000 V, applied to the first environment.

C2: Rated voltage lower than 1000 V, non-plug, socket, or mobile devices; power drive systems that must be installed and operated by specialized personnel when applied to environments of Category I

Note: The EMC standard IEC/EN 61800-3 no longer restricts the power distribution of VFDs, but it specifies their use, installation, and commissioning. Specialized personnel or organizations must have the necessary skills (including the EMC-related knowledge) for installing and/or performing commissioning on the electrical drive systems.

C3: Rated voltage lower than 1000 V, applied to the second environment. They cannot be applied to the first environment.

C4: Rated voltage higher than 1000 V, or rated current higher or equal to 400 A, applied to complex systems in the second environment.

Appendix C Dimension drawings

C.1 What this chapter contains

This chapter provides the dimension drawings of the VFD, which uses millimeter (mm) as the unit.

C.2 Keypad structure

C.2.1 Structure diagram

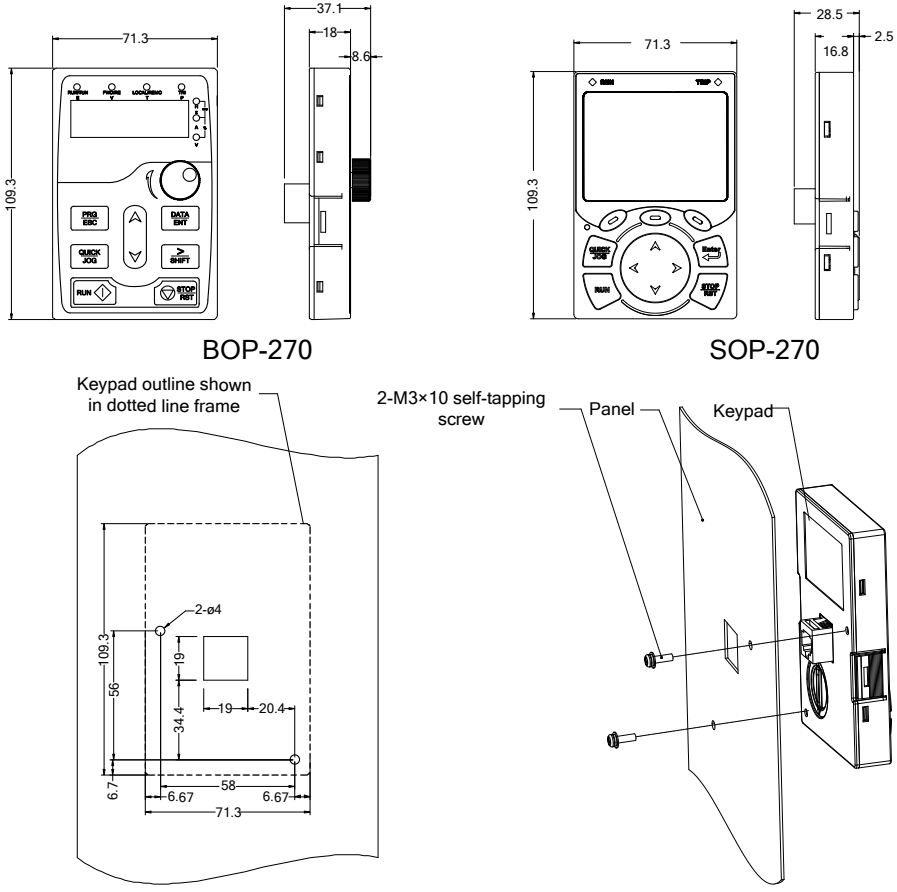

Figure C-1 Keypad structure

Note: Flat keypad cables are required for the following models. For the remaining models, both flat and standard keypad cables can be used.

Name	Length (m)	Ordering No.	Applicable models
Flat keypad cable	1	67004-00053	30–37kW
	2	67004-00010	
	3	67004-00013	
	5	67004-00052	

C.2.2 Keypad mounting bracket

The external LED/LCD keypad can be mounted directly with two M3 self-tapping screws or with a keypad bracket, as shown in the following figure.

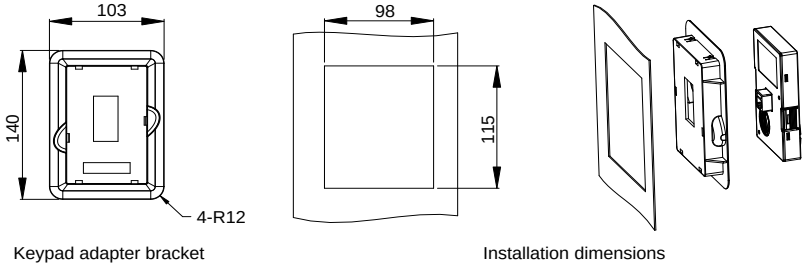

Figure C-2 (Optional) Keypad mounting bracket

Note:

- The keypad mounting bracket (model: GD350-JPZJ) needs to be purchased separately.
- M3 self-tapping screws will be included when purchasing the optional keypad.

C.3 VFD structure

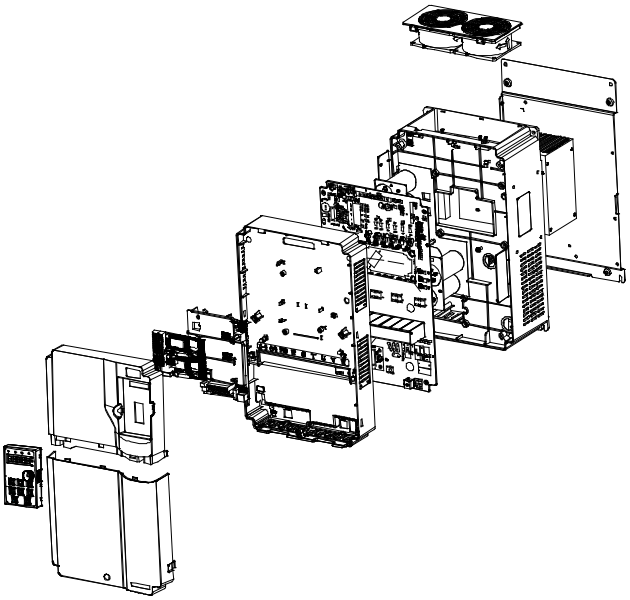

Figure C-3 VFD structure

C.4 Dimensions of AC 3PH 380V VFD models

C.4.1 Wall-mounting dimensions

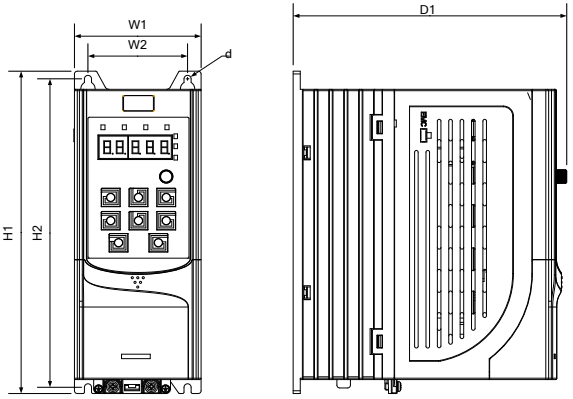

Figure C-4 1.5–7.5kW VFD wall-mounting diagram

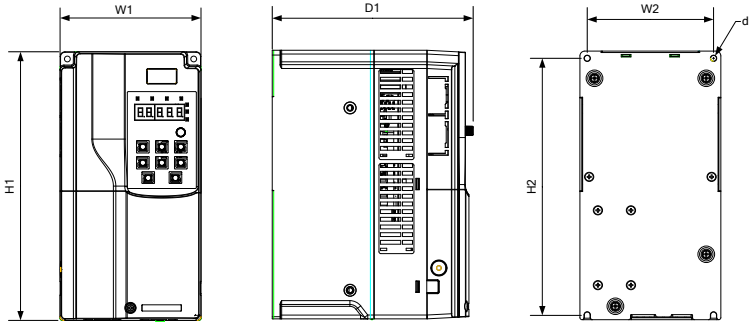

Figure C-5 11–45kW VFD wall-mounting diagram

Table C-1 1.5–45kW VFD wall-mounting dimensions

VFD model	Outline dimensions (mm)			Mounting hole distance (mm)			Hole diameter	Fixing screw
	W1	H1	D1	H2	W2	D2		
1.5–4kW	89	231	193	221	70	/	ø 5	M4
5.5–7.5kW	89	259	211.5	248	70	/	ø 6	M5
11–15kW	145	280	207	268	130	/	ø 6	M5
18.5–22kW	169	320	214	308	154	/	ø 6	M5
30–37kW	200	341	214	328.5	185	/	ø 6	M5
45kW	250	400	228	380	230	/	ø 6	M5

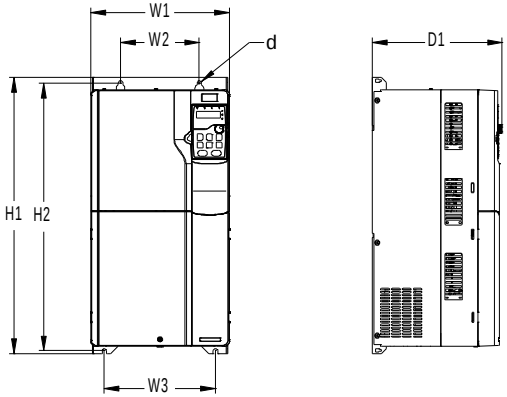

Figure C-6 380V 55–90kW VFD wall-mounting diagram

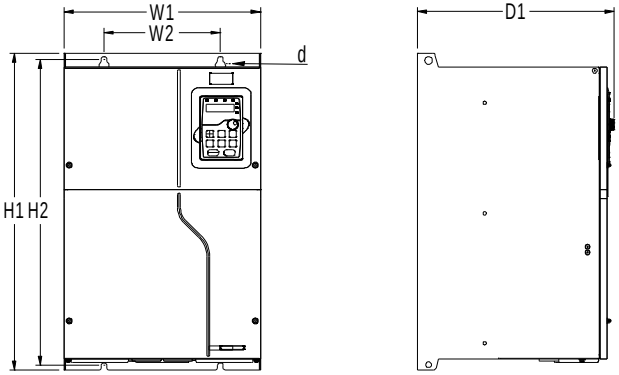

Figure C-7 380V 110–200kW VFD wall-mounting diagram

Table C-2 380V 55–200kW VFD wall-mounting dimensions

VFD model	Outline dimensions (mm)			Mounting hole distance (mm)			Hole diameter	Fixing screw
	W1	H1	D1	H2	W2	W3		
55–90kW	282	560	264	542	160	226	ø 9	M8
110–132kW	338	554	338	534	200	/	ø 9.5	M8
160–200kW	338	825	398	800	260	/	ø 11	M10

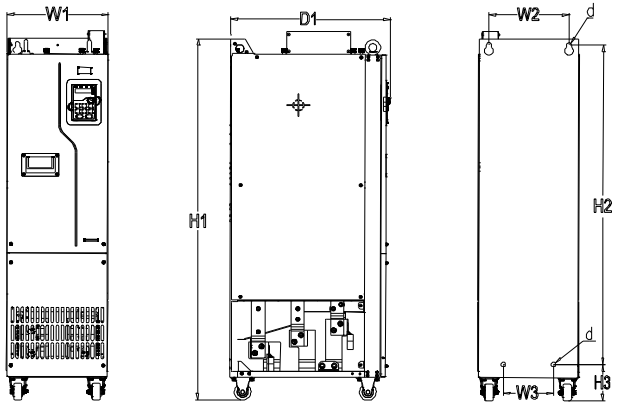

Figure C-8 380V 220–250kW VFD wall-mounting diagram

Table C-3 380V 220–250kW VFD wall-mounting dimensions

VFD model	Outline dimensions (mm)			Mounting hole distance (mm)			Hole diameter	Fixing screw
	W1	H1	D1	H2	W2	W3		
220–250kW	303	1108	477	980	240	150	ø 14	M12

C.4.2 Flange mounting dimensions

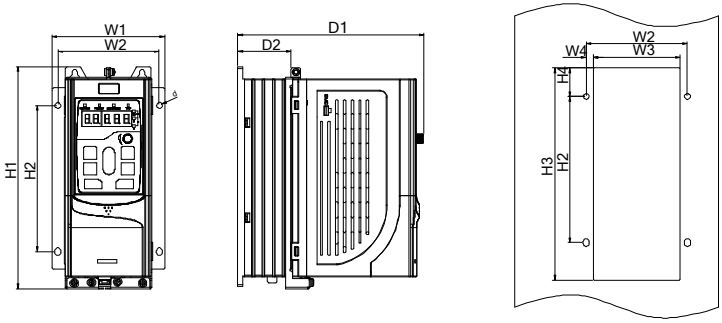

Figure C-9 380V 1.5–7.5kW VFD flange mounting diagram

Table C-4 380V 1.5–7.5kW VFD flange mounting dimensions

VFD model	Outline dimensions (mm)			Mounting hole distance (mm)							Hole diameter	Fixing screw
	W1	H1	D1	H2	H3	H4	W2	W3	W4	D2		
1.5–4kW	117	233.5	193	153.5	225	30	105	92.5	6.5	55	ø 6	M5
5.5–7.5kW	117	261	211.5	180	250	30	105	92.5	6.5	75	ø 6	M5

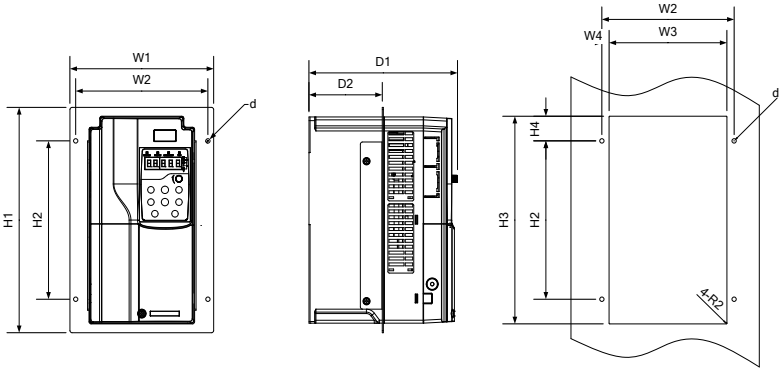

Figure C-10 380V 11–22kW VFD flange mounting diagram

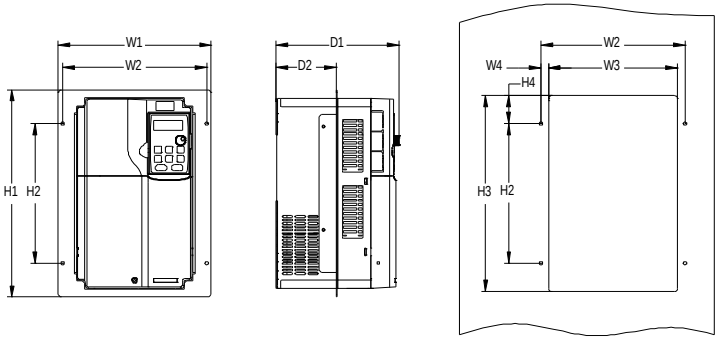

Figure C-11 380V 30–90kW VFD flange mounting diagram

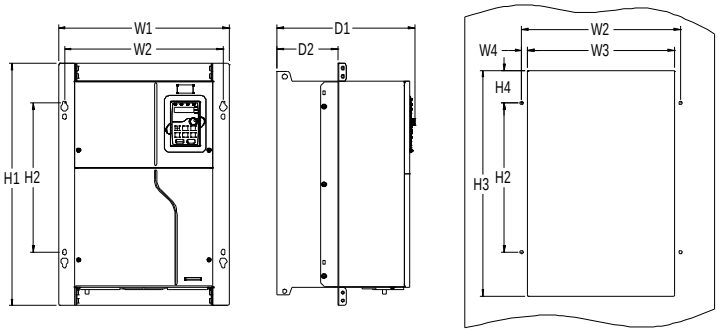

Figure C-12 380V 110–200kW VFD flange mounting diagram

Table C-5 380V 11–200kW VFD flange mounting dimensions

VFD model	Outline dimensions (mm)			Mounting hole distance (mm)							Installation hole	Fixed Screw
	W1	H1	D1	H2	H3	H4	W2	W3	W4	D2		
11–15kW	200	306	207	215	282	33.5	184	164	10	102	ø 6	M5
18.5–22kW	224	346	214	255	322	33.5	208	189	9.5	108	ø 6	M5
30–37kW	266	371	214	250	350.5	50.5	250	224	13	104	ø 6	M5
45kW	316	430	228	300	410	55	300	274	13	118.5	ø 6	M5
55–90kW	352	580	264	400	570	90	332	306	13	134	ø 9	M8
110–132kW	418.5	600	338	370	559	80.5	389.5	361	14	149.5	ø 10	M8
160–200kW	428	868	398.5	625	830	80	394	345	24.5	183	ø 11	M10

C.4.3 Floor mounting dimensions

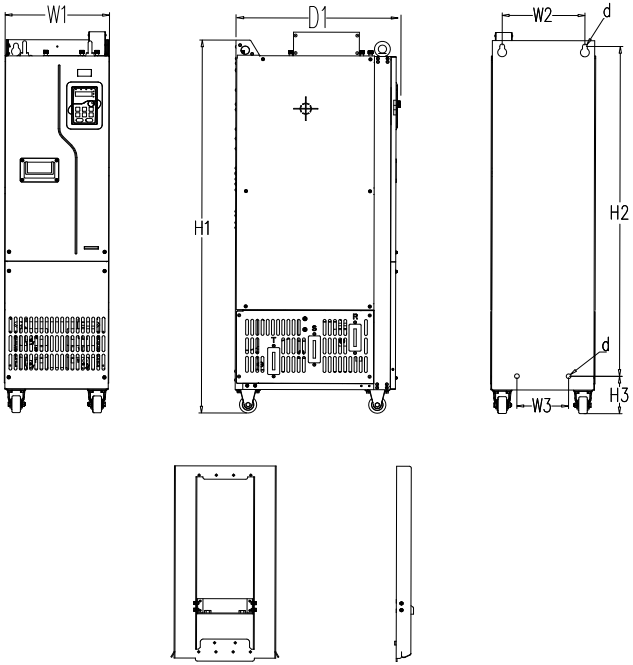

Figure C-13 380V 220–500kW VFD floor mounting diagram

Table C-6 380V 220–500kW VFD floor mounting dimensions

VFD model	Outline dimensions (mm)			Mounting hole distance (mm)				Hole diameter	Fixing screw
	W1	H1	D1	H2	H3	W2	W3		
220–250kW	303	1108	477	980	111	240	150	ø 14	M12
280–355kW	330	1288	552	1150	122	225	185	ø 13	M10
400–500kW	330	1398	552	1280	101	240	200	ø 13	M10

For details about the base mounting bracket, see Figure C-15 and Table C-8.

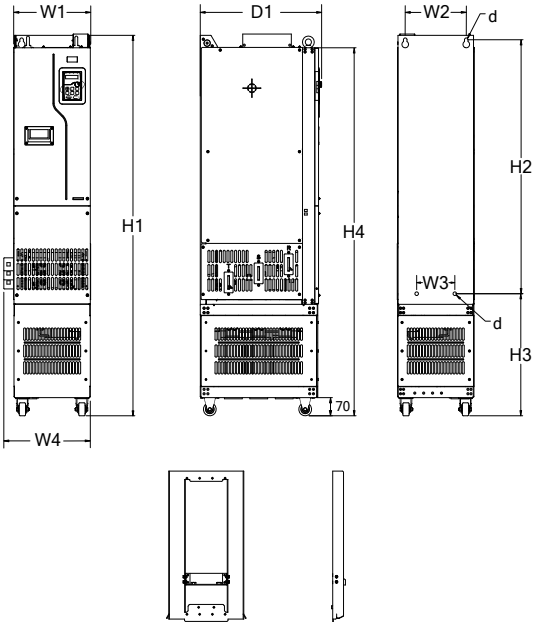

Figure C-14 Mounting diagram for 380V 220–500kW VFDs with output reactors

Table C-7 Floor mounting dimensions for 380V 220–500 VFDs with output reactors

VFD model	Outline dimensions (mm)				Mounting hole distance (mm)					Hole diameter	Fixing screw
	W1	W4	H1	D1	H2	H3	H4	W2	W3		
220–250kW	303	350	1470	477	980	471	1420	240	150	ø 14	M12
280–355kW	330	428	1619	552	1150	453	1571	225	185	ø 13	M10
400–500kW	330	430	1729	552	1280	432	1681	240	200	ø 13	M10

For details about the base mounting bracket, see Figure C-15 and Table C-8.

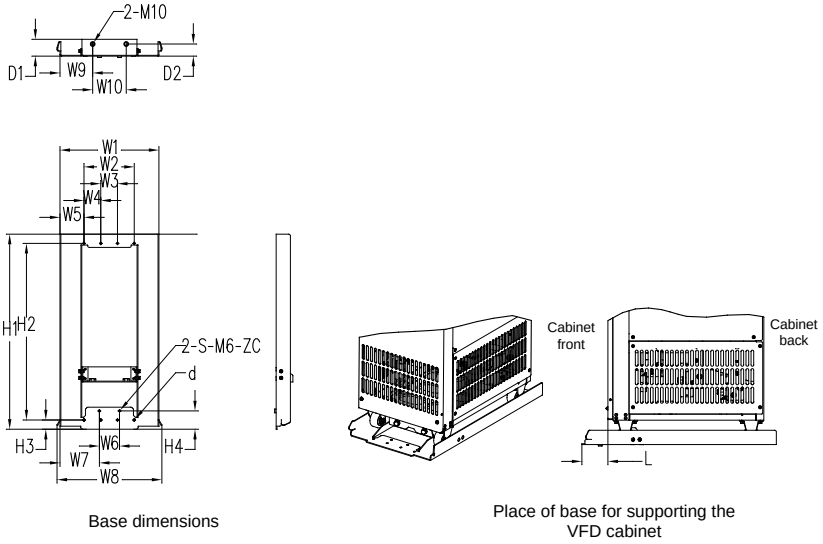

Figure C-15 380V 220–500kW VFD base bracket dimensions and mounting

Table C-8 380V 220–500kW VFD base bracket dimensions

VFD model	W1	W2	W3	W4	W5	W6	W7	W8	W9	W10	H1	H2	H3	H4	D1	D2	d	Screw	L
220–250kW	295	150	50	50	71.5	60	117.5	313	97.5	100	580	525	27.5	54.5	50	36	6	M5 self-tapping screw	77.5
280–315kW	321	150	50	50	84.5	60	130.5	339	110.5	100	580	525	27.5	54.5	46	33.5	6		25.5
355–500kW																			25

Appendix D Optional peripheral accessories

D.1 What this chapter contains

This chapter describes how to select optional accessories for the VFD.

D.2 Wiring of peripheral accessories

The following figure shows the external wiring of the VFD.

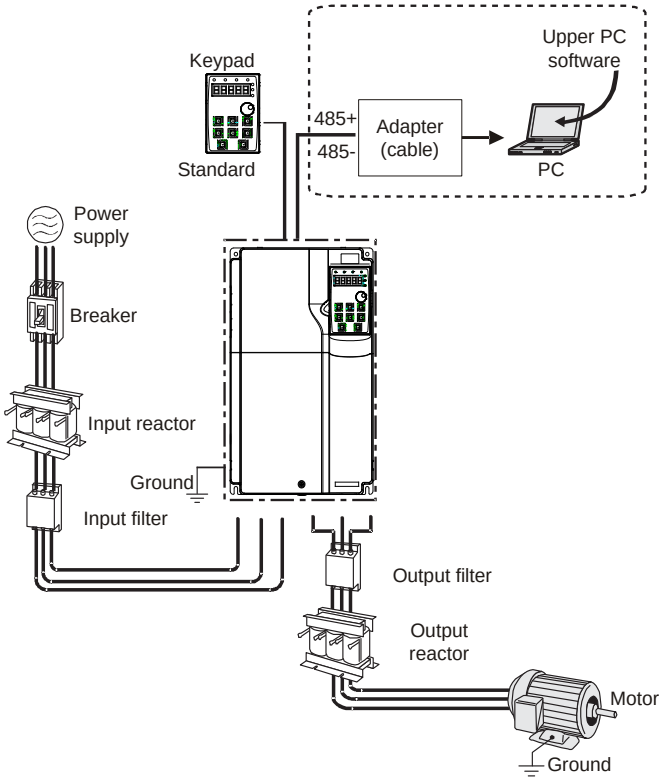

Note: You can choose the optional built-in DC reactor, which will be installed at the factory before delivery.

Image	Name	Description
	Cable	Accessory for signal transmission.

Image	Name	Description
	Breaker	Device for electric shock prevention and protection against short-to-ground that may cause current leakage and fire. Select residual-current circuit breakers (RCCBs) that are applicable to VFDs and can restrict high-order harmonics, and of which the rated sensitive current for one VFD is larger than 30 mA.
	Input reactor	Accessories used to improve the power factor on the input side of the VFD, and thus restrict high-order harmonic currents.
	Input filter	Accaccessory that restricts the electromagnetic interference generated by the VFD and transmitted to the public grid through the power cable. Try to install the input filter near the input terminal side of the VFD.
	Output filter	Accessory used to restrict interference generated in the wiring area on the output side of the VFD. Try to install the output filter near the output terminal side of the VFD.
	Output reactor	Accessory used to lengthen the valid transmission distance of the inverter, which effectively restrict the transient high voltage generated during the switch-on and switch-off of the IGBT module of the inverter.

D.3 Power supply

See chapter 4 Installation guidelines.

	• Ensure that the voltage class of the VFD is consistent with that of the grid.

D.4 Cables

D.4.1 Power cables

The sizes of the input power cables and motor cables must comply with local regulations.

- The input power cables and motor cables must be able to carry the corresponding load currents.
- The maximum temperature margin of the motor cables in continuous operation cannot be lower than 70°C.
- The conductivity of the PE grounding conductor is the same as that of the phase conductor, that is, the cross-sectional areas are the same.
- For details about the EMC requirements, see Appendix B Technical data.

To meet the EMC requirements stipulated in the CE standards, you must use symmetrical shielded cables as motor cables (as shown in the following figure).

Four-core cables can be used as input cables, but symmetrical shielded cables are recommended. Compared with four-core cables, symmetrical shielded cables can reduce electromagnetic radiation as well as the current and loss of the motor cables.

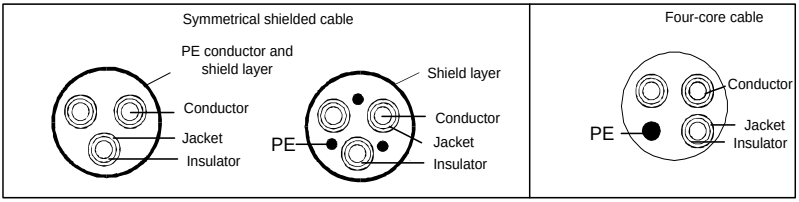

Note: If the electrical conductivity of the motor cable shield layer does not meet the requirements, a separate PE conductor must be used.

To protect the conductors, the cross-sectional area of the shielded cables must be the same as that of the phase conductors if the cable and conductor are made of materials of the same type. This reduces grounding resistance, and thus improves impedance continuity.

To effectively restrict the emission and conduction of radio frequency (RF) interference, the conductivity of the shielded cable must at least be 1/10 of the conductivity of the phase conductor. This requirement can be well met by a copper or aluminum shield layer. Figure D-1 shows the min. requirement on motor cables of VFD. The cable must consist of a layer of spiral-shaped copper strips. The denser the shield layer is, the more effectively the electromagnetic interference is restricted.

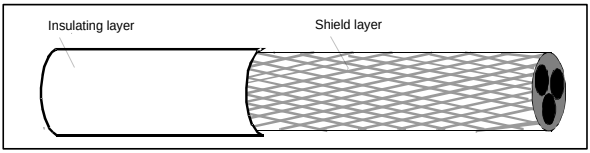

Figure D-1 Cable cross section

D.4.2 Control cables

All analog control cables and cables used for frequency input must be shielded cables. Analog signal cables need to be double-shielded twisted-pair cables (as shown in figure a). Use one separate shielded twisted pair for each signal. Do not use the same ground wire for different analog signals.

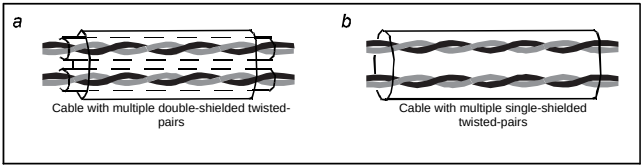

Figure D-2 Power cable arrangement

For low-voltage digital signals, double-shielded cables are recommended, but shielded or unshielded twisted pairs (as shown in figure b) also can be used. For frequency signals, however, only shielded cables can be used.

Relay cables need to be those with metal braided shield layers.

Keypads need to be connected by using network cables. In complicated electromagnetic environments, shielded network cables are recommended.

Note: Analog signals and digital signals cannot use the same cables, and their cables must be arranged separately.

Dielectric withstand tests have been performed between the main circuit and housing of each VFD before delivery. In addition, the VFD has the internal voltage limiting circuit, which can automatically cut off the test voltage. Do not perform any voltage withstand or insulation resistance tests, such as high-voltage insulation tests or using a megameter to measure the insulation resistance, on the VFD or its components.

Note: Before connecting the input power cable of the VFD, check the insulation conditions of the cable according to local regulations.

D.4.3 Recommended cable size

Table D-1 Recommended cable size

VFD model	R, S, T / U, V, W (+), (-)		PE		Fastening torque (Nm)
	Cable size (mm^2)	Connection terminal model	Cable size (mm^2)	Connection terminal model	
K320C-1R5P-4(-C2)	1	TNR1.25-4	1	TNR1.25-4	1.2–1.5
K320C-003P-4(-C2)	1	TNR1.25-4	1	TNR1.25-4	1.2–1.5
K320C-004P-4(-C2)	1.5	TNR1.25-4	1.5	TNR1.25-4	1.2–1.5
K320C-5R5P-4(-C2)	2.5	TNR2-4	2.5	TNR2-4	1.2–1.5
K320C-7R5P-4(-C2)	2.5	TNR2-4	2.5	TNR2-4	1.2–1.5
K320C-011P-4(-L1/-C2)	4	TNR3.5-5	4	TNR3.5-5	2–2.5
K320C-015P-4(-L1/-C2)	6	TNR5.5-5	6	TNR5.5-5	2–2.5
K320C-018P-4(-L1/-C2)	10	TNR8-5	10	TNR8-5	2–2.5
K320C-022P-4(-L1/-C2)	16	TNR14-5	16	TNR14-5	2–2.5
K320C-030P-4(-L1)(-C3)	16	GTNR16-6	16	GTNR16-5	3.5
K320C-037P-4(-L1)(-C3)	25	GTNR25-6	16	GTNR16-5	3.5
K320C-045P-4(-L1)(-C3)	25	GTNR25-6	16	GTNR16-5	3.5
K320C-055P-4(-L1)(-C3)	35	GTNR35-8	16	GTNR16-6	9–11
K320C-075P-4(-L1)(-C3)	50	GTNR50-8	25	GTNR25-6	9–11
K320C-090P-4(-L1)(-C3)	70	GTNR70-8	35	GTNR35-6	9–11
K320C-110P-4(-L1)(-C3)	95	GTNR95-12	50	GTNR50-8	31–40
K320C-132P-4(-L1)(-C3)	95	GTNR95-12	50	GTNR50-8	31–40
K320C-160P-4(-L1)	150	GTNR150-12	70	GTNR70-8	31–40
K320C-185P-4(-L1)	185	GTNR185-12	95	GTNR95-8	31–40
K320C-200P-4(-L1)	185	GTNR185-12	95	GTNR95-8	31–40
K320C-220P-4(-L*n*)	2×95	GTNR95-12	95	GTNR95-12	31–40
K320C-250P-4(-L*n*)	2×95	GTNR95-12	95	GTNR95-12	31–40
K320C-280P-4(-L*n*)	2×150	GTNR150-12	150	GTNR150-12	31–40
K320C-315P-4(-L*n*)	2×150	GTNR150-12	150	GTNR150-12	31–40
K320C-355P-4(-L*n*)	2×185	GTNR185-12	185	GTNR185-12	31–40
K320C-400P-4-L*n*	2×185	GTNR185-16	2×120	GTNR120-12	92–100

VFD model	R, S, T / U, V, W (+), (-)		PE		Fastening torque (Nm)
	Cable size (mm^2)	Connection terminal model	Cable size (mm^2)	Connection terminal model	
K320C-450P-4-L*n*	2×240	GTNR240-16	2×150	GTNR150-12	92–100
K320C-500P-4-L*n*	2×300	GTNR300-16	2×150	GTNR150-12	92–100

Note: *n* = 1 or 3

Copper pipe terminals for cables (GTNR)



Round bare terminals (TNR)



GTNR terminal brand: Suzhou Yuanli (The model varies with the brand.)

TNR terminal brand: Suzhou Yuanli (The model varies with the brand.)

Table D-2 Recommended cable size (Compliant with UL standards)

VFD model	R, S, T / U, V, W (+), (-)		PE		Fastening torque (Nm)
	Cable size (AWG/Kcmil)	Connection terminal model	Cable size (AWG/Kcmil)	Connection terminal model	
K320C-1R5P-4(-C2)	16	TLK1.5-4	16	TLK1.5-4	1.2–1.5
K320C-003P-4(-C2)	16	TLK1.5-4	16	TLK1.5-4	1.2–1.5
K320C-004P-4(-C2)	14	TLK2.5-4	14	TLK2.5-4	1.2–1.5
K320C-5R5P-4(-C2)	14	TLK2.5-4	14	TLK2.5-4	1.2–1.5
K320C-7R5P-4(-C2)	12	TLK4-4	12	TLK4-4	1.2–1.5
K320C-011P-4(-L1/-C2)	10	TLK6-5	10	TLK6-5	2–2.5
K320C-015P-4(-L1/-C2)	8	TLK10-5	8	TLK10-5	2–2.5
K320C-018P-4(-L1/-C2)	6	TLK16-5	6	TLK16-5	2–2.5
K320C-022P-4(-L1/-C2)	4	TLK25-5	4	TLK25-5	2–2.5
K320C-030P-4(-L1)(-C3)	4	TLK25-6	4	TLK25-5	3.5
K320C-037P-4(-L1)(-C3)	3	TLK25-6	4	TLK25-5	3.5
K320C-045P-4(-L1)(-C3)	3	TLK25-6	4	TLK25-5	3.5
K320C-055P-4(-L1)(-C3)	2	TLK35-8	4	TLK25-6	9–11
K320C-075P-4(-L1)(-C3)	1/0	TLK50-8	3	TLK25-6	9–11
K320C-090P-4(-L1)(-C3)	3/0	TLK95-8	2	TLK35-6	9–11
K320C-110P-4(-L1)(-C3)	4/0	TLK120-12	1/0	TLK50-8	31–40
K320C-132P-4(-L1)(-C3)	4/0	TLK120-12	1/0	TLK50-8	31–40

VFD model	R, S, T / U, V, W (+), (-)		PE		Fastening torque (Nm)
	Cable size (AWG/Kcmil)	Connection terminal model	Cable size (AWG/Kcmil)	Connection terminal model	
K320C-160P-4(-L1)	300	TLK150-12	3/0	TLK95-8	31–40
K320C-185P-4(-L1)	400	TLK240-12	4/0	TLK120-8	31–40
K320C-200P-4(-L1)	400	TLK240-12	4/0	TLK120-8	31–40
K320C-220P-4(-L*n*)	2×4/0	2×TLK120-12	4/0	TLK120-12	31–40
K320C-250P-4(-L*n*)	2×4/0	2×TLK120-12	4/0	TLK120-12	31–40
K320C-280P-4(-L*n*)	2×300	2×TLK150-12	300	TLK150-12	31–40
K320C-315P-4(-L*n*)	2×300	2×TLK150-12	300	TLK150-12	31–40
K320C-355P-4(-L*n*)	2×400	2×TLK240-12	400	TLK240-12	31–40
K320C-400P-4-L*n*	2×400	2×SQNBS200-16	2×250	2×TLK150-12	96
K320C-450P-4-L*n*	2×500	2×SQNBS250-16	2×300	2×TLK150-12	96
K320C-500P-4-L*n*	2×600	2×SQNBS325-16	2×300	2×TLK150-12	96

Note*: n* = 1 or 3



TLK terminal



SQNBS narrow-head terminal

TLK terminal brand: KST (The model varies with the brand.)

SQNBS narrow-head terminal brand: KST (The model varies with the brand.)

Note:

- If you select a cable model larger than a recommended model in the table, check whether the wiring terminal width exceeds the allowed width in 4.3.2 Main circuit terminal diagram.
- If yes, select an SG narrow-head terminal and matching cable since an SG narrow-head terminal has smaller width.
- The cables recommended for the main circuit can be used in scenarios where the ambient temperature is lower than 40°C, the wiring distance is shorter than 100m, and the current is the rated current.
- The terminals (+) and (-) are used by multiple VFDs to share the DC bus.

D.4.4 Cable arrangement

Motor cables must be arranged away from other cables. The motor cables of several inverters can be arranged in parallel. It is recommended that you arrange the motor cables, input power cables, and control cables separately in different trays. The output dU/dt of the inverters may increase electromagnetic interference on other cables. Do not arrange other cables and the motor cables in parallel.

If a control cable and power cable must cross each other, ensure that the angle between them is 90 degrees.

The cable trays must be connected properly and well grounded. Aluminum trays can implement local equipotential.

The following figure shows the cable arrangement.

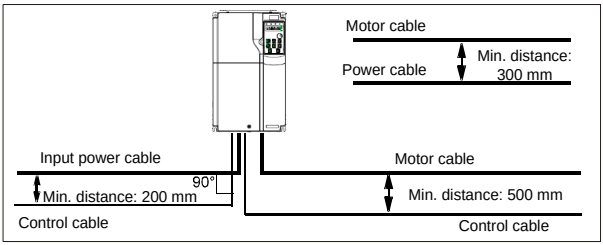

Figure D-3 Cable routing distance

D.4.5 Insulation inspection

Check the motor and the insulation conditions of the motor cable before running the motor.

1. Ensure that the motor cable is connected to the motor, and then remove the motor cable from the U, V, and W output terminals of the VFD.
2. Use a megohmmeter of 500V DC to measure the insulation resistance between each phase conductor and the protection grounding conductor. For details about the insulation resistance of the motor, see the description provided by the manufacturer.

Note: The insulation resistance is reduced if it is damp inside the motor. If it may be damp, you need to dry the motor and then measure the insulation resistance again.

D.5 Breakers and electromagnetic contactors

You need to add a fuse to prevent overload. You need to add a fuse to prevent overload.

You need to configure a manually manipulated molded case circuit breaker (MCCB) between the AC power supply and VFD. The breaker must be locked in the open state to facilitate installation and inspection. The capacity of the breaker needs to be 1.5 to 2 times the VFD rated input current.

⚠	• According to the working principle and structure of breakers, if the manufacturer's regulation is not followed, hot ionized gases may escape from the breaker enclosure when a short-circuit occurs. To ensure safe use, exercise extra caution when installing and placing the breaker. Follow the manufacturer's instructions.

To ensure safety, you can configure an electromagnetic contactor on the input side to control the switch-on and switch-off of the main circuit power, so that the input power supply of the VFD can be effectively cut off when a system fault occurs.

Table D-3 Ratings for AC 3PH 380V VFD models

VFD model	Breaker rated current (A)	Fast-acting fuse rated current (A)	Contactor rated current (A)
K320C-1R5P-4(-C2)	6	10	9
K320C-003P-4(-C2)	10	10	9
K320C-004P-4(-C2)	20	20	18
K320C-5R5P-4(-C2)	25	32	25
K320C-7R5P-4(-C2)	32	40	32
K320C-011P-4(-L1/-C2)	50	50	38
K320C-015P-4(-L1/-C2)	50	63	50
K320C-018P-4(-L1/-C2)	63	80	65
K320C-022P-4(-L1/-C2)	80	80	80
K320C-030P-4(-L1)(-C3)	100	125	80
K320C-037P-4(-L1)(-C3)	125	125	98
K320C-045P-4(-L1)(-C3)	140	150	115
K320C-055P-4(-L1)(-C3)	180	200	150
K320C-075P-4(-L1)(-C3)	225	250	185
K320C-090P-4(-L1)(-C3)	250	300	225
K320C-110P-4(-L1)(-C3)	315	350	265
K320C-132P-4(-L1)(-C3)	400	400	330
K320C-160P-4(-L1)	500	500	400
K320C-185P-4(-L1)	500	600	400
K320C-200P-4(-L1)	630	600	500
K320C-220P-4(-L*n*)	630	700	500
K320C-250P-4(-L*n*)	700	800	630
K320C-280P-4(-L*n*)	800	1000	630
K320C-315P-4(-L*n*)	1000	1000	800
K320C-355P-4(-L*n*)	1000	1000	800
K320C-400P-4-L*n*	1000	1200	1000
K320C-450P-4-L*n*	1250	1200	1000
K320C-500P-4-L*n*	1250	1400	1000

Note:

- The accessory specifications described in the preceding table are ideal values. You can select accessories based on the actual market conditions, but try not to use those with lower values.
- *n* = 1 or 3

D.6 Reactors

When the distance between the VFD and the motor is too long, the large parasitic capacitance to ground produces high harmonic current, which causes the VFD to frequently enable overcurrent protection and even causes motor insulation damage.

You must configure the output reactor nearby the VFD when the cable length is equal to or greater than the values in the following table.

Table D-4 Min. non-shield cable length for output reactor configuration

VFD power	Rated voltage (V)	Min. motor cable length (m)
1.5–5.5kW	380–480	50
7.5–45kW	380–480	100
55–500kW	380–480	150

Note:

- When one VFD drives multiple motors at the same time, you are advised to take the sum of cable lengths of all motors as the total motor cable length.
- Since output reactors need to be configured for 220kW–500kW VFDs, choose the K320C-220P-4-L3 – K320C-500P-4-L3 models.
- The motor cable length listed in the above table represent the ultimate capacity of the VFD. In practical applications, 80% of the motor cable length in the above table is recommended.

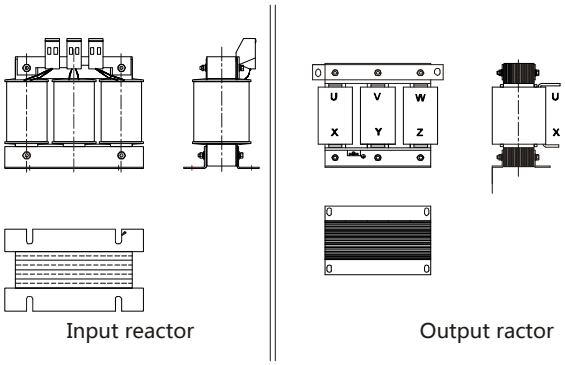

Table D-5 Reactor model selection for AC 3PH 380V VFDs

VFD model	Input reactor	Output reactor
K320C-1R5P-4(-C2)	ACL2-1R5-4	OCL2-1R5-4
K320C-003P-4(-C2)	ACL2-2R2-4	OCL2-2R2-4
K320C-004P-4(-C2)	ACL2-004-4	OCL2-004-4
K320C-5R5P-4(-C2)	ACL2-5R5-4	OCL2-5R5-4
K320C-7R5P-4(-C2)	ACL2-011-4	OCL2-7R5-4
K320C-011P-4(-L1/-C2)	ACL2-015-4	OCL2-011-4
K320C-015P-4(-L1/-C2)	ACL2-018-4	OCL2-015-4
K320C-018P-4(-L1/-C2)	ACL2-018-4	OCL2-018-4
K320C-022P-4(-L1/-C2)	ACL2-022-4	OCL2-022-4
K320C-030P-4(-L1)(-C3)	ACL2-037-4 (ACL2-022-4)	OCL2-037-4
K320C-037P-4(-L1)(-C3)	ACL2-037-4	OCL2-037-4
K320C-045P-4(-L1)(-C3)	ACL2-045-4	OCL2-045-4
K320C-055P-4(-L1)(-C3)	ACL2-055-4 (ACL2-045-4)	OCL2-055-4
K320C-075P-4(-L1)(-C3)	ACL2-075-4 (ACL2-055-4)	OCL2-075-4
K320C-090P-4(-L1)(-C3)	ACL2-075-4	OCL2-110-4
K320C-110P-4(-L1)(-C3)	ACL2-110-4	OCL2-110-4
K320C-132P-4(-L1)(-C3)	ACL2-160-4 (ACL2-110-4)	OCL2-132-4
K320C-160P-4(-L1)	ACL2-160-4	OCL2-200-4
K320C-185P-4(-L1)	ACL2-200-4 (ACL2-160-4)	OCL2-200-4
K320C-200P-4(-L1)	ACL2-200-4	OCL2-200-4
K320C-220P-4(-L*n*)	ACL2-280-4	/
K320C-250P-4(-L*n*)	ACL2-280-4	/
K320C-280P-4(-L*n*)	ACL2-280-4	/
K320C-315P-4(-L*n*)	ACL2-350-4	/
K320C-355P-4(-L*n*)	ACL2-350-4	/
K320C-400P-4-L*n*	ACL2-400-4	/
K320C-450P-4-L*n*	ACL2-500-4	/
K320C-500P-4-L*n*	ACL2-500-4	/

Note:

- The rated input voltage drop of input reactor is designed to 2%.
- The rated output voltage drop of output reactor is designed to 1%.
- The preceding table lists only external accessories. You need to specify whether external or built-in accessories are needed in your purchase order.
- If output reactors need to be configured for 220kW and higher VFDs, choose the L3 models.
- *n* = 1 or 3

D.7 Filters

D.7.1 Input filters

D.7.1.1 SCHAFFNER input filters

For 30–132kW models, you can choose the K320C standard models and configure external SCHAFFNER FN3258/FN3359 series filters to meet the IEC/EN 61800-3 First environment (C2) EMC requirements under the condition of 20m motor cable.

Table D-6 lists the filter model selection. For more details about the SCHAFFNER filters, please contact us.



Figure D-4 SCHAFFNER FN3258 series filters



Figure D-5 SCHAFFNER FN3359 series filters

Table D-6 SCHAFFNER filter model selection (ambient temperature lower than 40°C)

Model	Rated power (kW)	Rated input current (A)	Filter model
K320C-030P-4	30	75	FN 3258-75-34
K320C-037P-4	37	90	FN 3258-100-35
K320C-045P-4	45	108	FN 3258-100-35
K320C-055P-4	55	142	FN 3258-130-35
K320C-075P-4	75	177	FN 3258-180-40
K320C-090P-4	90	200	FN 3258-180-40
K320C-110P-4	110	240	FN 3359-250-28
K320C-132P-4	132	278	FN 3359-320-99
K320C-030P-4-L1	30	56	FN 3258-75-34
K320C-037P-4-L1	37	69	FN 3258-75-34
K320C-045P-4-L1	45	101	FN 3258-100-35
K320C-055P-4-L1	55	117	FN 3258-130-35
K320C-075P-4-L1	75	149	FN 3258-180-40
K320C-090P-4-L1	90	171	FN 3258-180-40
K320C-110P-4-L1	110	205	FN 3359-250-28
K320C-132P-4-L1	132	235	FN 3359-250-28

D.7.1.2 FLT input filters

Choose the filters in the following table to meet the C2 EMC requirements under the condition of 1m motor cable.

Table D-7 FLT input filter model selection for AC 3PH 380V VFDs

VFD model	Input filter
K320C-1R5P-4	FLT-P04006L-B
K320C-2R2P-4	
K320C-004P-4	FLT-P04016L-B
K320C-5R5P-4	FLT-P04032L-B
K320C-7R5P-4	
K320C-011P-4(-L1)	FLT-P04045L-B
K320C-015P-4(-L1)	
K320C-018P-4(-L1)	FLT-P04065L-B
K320C-022P-4(-L1)	
K320C-030P-4(-L1)	FLT-P04100L-B (FLT-P04065L-B)
K320C-037P-4(-L1)	FLT-P04100L-B

VFD model	Input filter
K320C-045P-4(-L1)	
K320C-055P-4(-L1)	FLT-P04150L-B
K320C-075P-4(-L1)	FLT-P04240L-B (FLT-P04150L-B)
K320C-090P-4(-L1)	FLT-P04240L-B
K320C-110P-4(-L1)	
K320C-132P-4(-L1)	FLT-P04400L-B
K320C-160P-4(-L1)	
K320C-185P-4(-L1)	
K320C-200P-4(-L1)	
K320C-220P-4(-L*n*)	FLT-P04600L-B
K320C-250P-4(-L*n*)	
K320C-280P-4(-L*n*)	
K320C-315P-4(-L*n*)	FLT-P04800L-B
K320C-355P-4(-L*n*)	
K320C-400P-4-L*n*	
K320C-450P-4-L*n*	FLT-P041000L-B
K320C-500P-4-L*n*	

Note: *n* = 1 or 3

D.7.2 Output filters

Choose the filters in the following table to meet the C2 EMC requirements under the condition of 1m motor cable.

Table D-8 Output filter model selection for AC 3PH 380V VFDs

VFD model	Output filter
K320C-1R5P-4(-C2)	FLT-L04006L-B
K320C-003P-4(-C2)	
K320C-004P-4(-C2)	FLT-L04016L-B
K320C-5R5P-4(-C2)	FLT-L04032L-B
K320C-7R5P-4(-C2)	
K320C-011P-4(-L1/-C2)	FLT-L04045L-B
K320C-015P-4(-L1/-C2)	
K320C-018P-4(-L1/-C2)	FLT-L04065L-B
K320C-022P-4(-L1/-C2)	
K320C-030P-4(-L1)(-C3)	FLT-L04065L-B
K320C-037P-4(-L1)(-C3)	FLT-L04100L-B
K320C-045P-4(-L1)(-C3)	
K320C-055P-4(-L1)(-C3)	FLT-L04150L-B
K320C-075P-4(-L1)(-C3)	
K320C-090P-4(-L1)(-C3)	FLT-L04240L-B
K320C-110P-4(-L1)(-C3)	
K320C-132P-4(-L1)(-C3)	

VFD model	Output filter
K320C-160P-4(-L1)	FLT-L04400L-B
K320C-185P-4(-L1)	
K320C-200P-4(-L1)	
K320C-220P-4(-Ln)	FLT-L04600L-B
K320C-250P-4(-Ln)	
K320C-280P-4(-Ln)	
K320C-315P-4(-Ln)	FLT-L04800L-B
K320C-355P-4(-Ln)	
K320C-400P-4-Ln	
K320C-450P-4-Ln	FLT-L041000L-B
K320C-500P-4-Ln	

Note: *n* = 1 or 3

D.8 List of other optional accessories

Accessory	Specifications	Function	Remarks
External LED keypad	BOP-270	Externally connected LED display and operation panel	Applicable to: K320C-1R5P-4(-C2)–K320C-7R5P-4(-C2); K320C-011P-4(-L1/-C2)– K320C-022P-4(-L1/-C2)
External LCD keypad	SOP-270	Externally connected LCD display and operation panel	Applicable to all series For details about how to operate the keypad, see chapter 5 in the operation manual for GD350 series high-performance multifunction VFD.
Keypad bracket	GD350-JPZJ	Used to fix the LED or LCD keypad for external connection to the electrical cabinet	Applicable to all series
Rail assembly for cabinet mounting	K320C-DGZJ	Used to mount a VFD in a cabinet, improving mounting efficiency and safety	Applicable to: 220–500kW VFD models. For details, see Figure 4-14 – Figure 4-16.
Flange mounting bracket	Consult the manufacturer.	Used to meet the flange mounting needs	Applicable to: K320C-1R5P-4(-C2)– K320C-7R5P-4(-C2); K320C-011P-4(-L1/-C2)– K320C-200P-4(-L1)

Appendix E Energy efficiency data

Table E–1 Power loss and IE class

Model	Relative loss (%)								Stand by loss (W)	IE class
	(0;25)	(0;50)	(0;100)	(50;25)	(50;50)	(50;100)	(90;50)	(90;100)		
K320C-1R5P-4(-C2)	0.78	0.95	1.03	0.86	1.17	1.23	1.35	2.02	16	IE2
K320C-003P-4(-C2)	0.82	093	1.17	1.09	1.31	1.60	1.59	2.09	16	IE2
K320C-004P-4(-C2)	0.74	1.20	1.55	1.01	1.28	1.89	1.45	2.29	16	IE2
K320C-5R5P-4(-C2)	0.71	0.97	1.32	0.89	1.21	1.85	1.34	2.18	16	IE2
K320C-7R5P-4(-C2)	0.68	0.78	1.75	0.76	1.03	1.79	1.22	2.06	16	IE2
K320C-011P-4(-L1/-C2)	0.65	0.89	1.62	0.66	1.31	1.90	1.38	2.28	22	IE2
K320C-015P-4(-L1/-C2)	0.71	0.92	1.41	0.89	1.17	1.86	1.29	2.27	22	IE2
K320C-018P-4(-L1/-C2)	0.72	0.95	1.57	1.09	1.37	1.93	1.47	2.26	24	IE2
K320C-022P-4(-L1/-C2)	0.67	0.87	1.44	1.07	1.20	1.92	1.27	2.04	24	IE2
K320C-030P-4(-L1)(-C3)	0.71	0.98	1.76	1.08	1.46	1.92	1.66	2.21	26	IE2
K320C-037P-4(-L1)(-C3)	0.67	0.85	1.60	1.09	1.42	1.86	1.60	2.07	26	IE2
K320C-045P-4(-L1)(-C3)	0.47	0.62	1.14	1.09	1.27	1.90	1.47	2.02	28	IE2
K320C-055P-4(-L1)(-C3)	0.42	0.69	1.04	0.98	1.19	1.72	1.45	1.88	32	IE2
K320C-075P-4(-L1)(-C3)	0.52	0.80	1.35	1.06	1.42	2.10	1.67	2.23	32	IE2
K320C-090P-4(-L1)(-C3)	0.40	0.72	1.29	0.93	1.31	1.82	1.58	2.11	32	IE2
K320C-110P-4(-L1)(-C3)	0.42	0.69	1.20	0.84	0.98	1.67	1.27	1.72	35	IE2
K320C-132P-4(-L1)(-C3)	0.50	0.65	1.28	0.97	1.12	1.74	1.22	1.85	35	IE2
K320C-160P-4(-L1)	0.61	1.01	1.52	1.03	1.15	1.93	1.42	2.14	38	IE2
K320C-185P-4(-L1)	0.56	0.95	1.45	0.90	1.19	1.88	1.37	2.07	38	IE2
K320C-200P-4(-L1)	0.58	0.98	1.61	1.20	1.30	2.16	1.55	2.41	38	IE2
K320C-220P-4(-L*n*)	0.59	0.85	1.76	1.24	1.58	2.40	1.68	2.54	42	IE2
K320C-250P-4(-L*n*)	0.65	0.91	1.86	1.33	1.64	2.41	1.73	2.48	42	IE2
K320C-280P-4(-L*n*)	0.68	0.85	1.92	1.27	1.47	2.26	1.62	2.40	48	IE2
K320C-315P-4(-L*n*)	0.66	0.94	1.88	1.19	1.49	2.45	1.56	2.54	48	IE2
K320C-355P-4(-L*n*)	0.72	1.01	1.87	1.11	1.41	2.30	1.47	2.47	48	IE2
K320C-400P-4-L*n*	0.78	0.82	1.64	1.06	1.38	2.25	1.43	2.31	55	IE2
K320C-450P-4-L*n*	0.75	0.89	1.52	1.08	1.27	2.16	1.37	2.23	55	IE2
K320C-500P-4-L*n*	0.73	0.78	1.40	0.90	1.10	1.90	1.25	2.16	55	IE2

Note: *n* = 1 or 3

Table E–2 Rated specifications

Model	Apparent power (kVA)	Rated output power (kW)	Rated output current (A)	Max. working temperature (°C)	Rated power frequency (Hz)	Rated power voltage (V)
K320C-1R5P-4(-C2)	2.44	1.5	3.7	50°C Derate by 1% for every increase of 1°C when the temperature exceeds 40°C.	50/60Hz Allowed range: 47–63Hz	3PH 380V
K320C-003P-4(-C2)	3.98	2.2	5			
K320C-004P-4(-C2)	6.2	4	9.5			
K320C-5R5P-4(-C2)	8.6	5.5	13			
K320C-7R5P-4(-C2)	12.2	7.5	17			
K320C-011P-4(-L1/-C2)	16.5	11	25			
K320C-015P-4(-L1/-C2)	21	15	32			
K320C-018P-4(-L1/-C2)	24	18.5	38			
K320C-022P-4(-L1/-C2)	30	22	45			
K320C-030P-4(-L1)(-C3)	39.5	30	60			
K320C-037P-4(-L1)(-C3)	49	37	75			
K320C-045P-4(-L1)(-C3)	60	45	92			
K320C-055P-4(-L1)(-C3)	75.7	55	115			
K320C-075P-4(-L1)(-C3)	98.7	75	150			
K320C-090P-4(-L1)(-C3)	120	90	180			
K320C-110P-4(-L1)(-C3)	142	110	215			
K320C-132P-4(-L1)(-C3)	172	132	250			
K320C-160P-4(-L1)	200	160	305			
K320C-185P-4(-L1)	217	185	330			
K320C-200P-4(-L1)	250	200	380			
K320C-220P-4(-L*n*)	280	220	425			
K320C-250P-4(-L*n*)	316	250	460			
K320C-280P-4(-L*n*)	349	280	530			
K320C-315P-4(-L*n*)	395	315	600			
K320C-355P-4(-L*n*)	425	355	650			
K320C-400P-4-L*n*	474	400	720			
K320C-450P-4-L*n*	540	450	820			
K320C-500P-4-L*n*	566	500	860			

Note: *n* = 1 or 3

Appendix F Further information

F.1 Product and service queries

Should you have any queries about the product, contact the local Kruger office. Provide the model and serial number of the product you query about. You can visit www.krugerfan.com to find a list of Kruger offices.

F.2 Feedback on Kruger VFD manuals

Your comments on our manuals are welcome. Visit www.krugerfan.com, directly contact online service personnel or choose **Contact Us** to obtain contact information.

F.3 Documents on the Internet

You can find manuals and other product documents in the PDF format on the Internet. Visit www.krugerfan.com.

KRUGER

KRUGER Ventilation Group

THAILAND (Regional HQ)

KRUGER VENTILATION INDUSTRIES ASIA CO., LTD.
30/159 Moo 1, Sinsakorn Industrial Estate,
Chetsadawithi Road, Khok Kham Mueng, Samuthsakorn 74000,
Thailand Tel: +662 1054298 Fax: +662 0248256-9
Website: www.krugerfan.com

THAILAND

KRUGER VENTILATION IND. (THAILAND) CO., LTD.
30/105 Moo 1, Sinsakorn Industrial Estate,
Chetsadawithi Road, Khok Kham Mueng, Samuthsakorn 74000, Thailand
Tel: +662 1050399 Fax: +662 1050370-2
Email: mktg@kruger.co.th

INDIA

KRUGER VENTILATION INDUSTRIES (INDIA) PVT. LTD.
Kruger Centre, Mumbai-Nasik Highway,
Kalamgaon, Shahapur, Thane 421601, Maharashtra,
India Tel: +91 9960558899/9975577211
Email: sales@krugerindia.com

INDIA (NORTH)

KRUGER VENTILATION INDUSTRIES (NORTH INDIA) PVT. LTD.
Village Rohad, Tehsil Bahadurgarh, Jhajjar, Haryana-124507
Tel. +91-9958991652/9958991660/8586966303
Fax +91-1276-278096
Email: sales.kni@krugerindia.com, service@krugerindia.com

KOREA

NEOMATE CO., LTD.
2-1010, Ace High Tech City B/D, 775 Gyeongin-ro,
Yeongdeungpo-gu, Seoul, Korea. Postal Code 07299
Tel: +82-2-2679-2052 Fax: +82-2-2679-2174
Email: y7890@neomate.co.kr

MYANMAR

KRUGER VENTILATION (MYANMAR) CO., LTD.
Room No. F21, Thiri Yadanar Whole Sale Market, (Htawunbe)
Toe Chae Ward, North Okkalapa Township, Yangon.
Tel: +959 763141081/2/3
Email: htoon@krugermm.com

SINGAPORE

KRUGER ENGINEERING PTE. LTD.
2 Venture Drive #20-23, Vision Exchange,
Singapore 608526.
Tel: +65 68631191 Fax: +65 68631151
Email: mktg@krugerfan.com

AUSTRALIA

S&P KRUGER AUSTRALIA PTY. LTD.
2 Cunningham St, Moorebank N.S.W. 2170
Tel: +61 2-98227747
Fax: +61 2-98227757
Email: info@sandpkruger.com.au

DUBAI

KRUGER VENTILATION INDUSTRIES, GULF BRANCH.
Jebel Ali Free Zone Authority (JAFZA) P.O Box No. 262949,
Dubai, UAE
Tel: +971 4 8819188/8832017
Fax: +971 4 8832018
Email: jsereno@krugerfan.com

INDONESIA

P.T. KRUGER VENTILATION INDONESIA.
JL. Teuku Umar No.20,
Karawaci - Tangerang 15115, Indonesia
Tel: +62 21-5512288/5513557 Fax: +62 21-5513502
Email: mktg@krugerindo.co.id

CHINA (GUANGZHOU)

GUANGZHOU KRUGER VENTILATION CO., LTD.
No. 9 Huahui Road, Huashan, Huadu,
Guangzhou, P.R. China 510880
Tel: +86 20-66356635 Fax: +86 20-86786001/86786500
Email: gzkruger@krugergz.com

CHINA (TIANJIN)

TIANJIN KRUGER VENTILATION CO., LTD.
Jingjin Science and Technology Park
Wuqing District, Tianjin, China
Tel: +86 22-22143480/3481 Fax: +86 22-22143482
Email: krugertj@krugertj.com

CHINA (SHANGHAI)

SHANGHAI KRUGER VENTILATION CO., LTD.
No.500 Yuanguo Road, Anting, Jiading District,
Shanghai 201814, P.R. China
Tel: +86 21-69573266 Fax: +86 21-69573296
Email: shkruger@krugerchina.com

CHINA (WUHAN)

WUHAN KRUGER VENTILATION CO., LTD.
No. 805, Huian Ave, Dongxihu District, Wuhan, Hubei, P.R. China
430040 Tel: +86 27-83248840/83060522/83097505
Fax: +86 27-83261886
Email: whkruger@krugerwh.com

HONG KONG

KRUGER VENTILATION (HONG KONG) LIMITED.
Flat C, 9/F, Yeung Yiu Chung (No.8) Industrial Building,
20 Wang Hoi Road, Kowloon Bay, Kowloon, Hong Kong
Tel: +852 22469182 Fax: +852 22469187
Email: info@kruger.com.hk

TAIPEI

KRUGER VENTILATION (TAIWAN) CO., LTD.
No. 157, Ping-an Rd, Hengfeng Village,
Dayuan Shiang Taoyuan County 337, Taiwan
Tel: +886 3-3859119 Fax: +886 3-3859118
Email: sales@krugertwn.com.tw

MALAYSIA

KRUVENT INDUSTRIES (M) SDN. BHD.
Lot 850, Jalan Subang 7, Taman Perindustrian Subang,
47500, Subang Jaya, Selangor D.E.
Tel: +603 80743399 Fax: +603 80743388
Email: mktg@kruger.com.my

PHILIPPINES

KRUGER M & E INDUSTRIES CORPORATION
B3 Welborne Industrial Park
Bancal Carmona Cavite 4116, Philippines
Tel: +63-2-7 6223260 * +63-46 4129652
HP: +63 925 8018444
Email: mktg@krugerph.net

VIETNAM

KRUGER VENTILATION INDUSTRIES (VIETNAM) CO., LTD.
Lot A7. 2-4, C2 Road, Thanh Thanh Cong IZ,
Trang Bang Dist. Tay Ninh Province, Vietnam
Tel: +84-276 3585200/01/02 Fax: +84-276 3585199
Email: mktg@krugervn.com

Edition 2
Printed in June 2024



Kruger Ventilation Industries Asia Co., Ltd.
30/159 Moo 1, Sinsakorn Industrial Estate
Chetsadawithi Road, Khok Kham Mueng,
Samuthsakorn 74000, Thailand
Tel: +662 1054298 Fax: +662 0248256-9
Website: www.krugerfan.com