KRUGER

CPF Series

SMOKESPILL CABINET FAN



Smokespill Cabinet Fan - **CPF Series**

- *The CPF Series cabinet centrifugal fan with separate motor cabin is designed for smokespill, kitchen exhaust or other applications where the drive system must be outside the air stream.*
- *Incorporated with a belt driven, high efficiency, low noise level, double inlet forward (CPF-F) or backward (CPF-B) impeller. Cabinet is manufactured in galvanized sheet steel.*
- *Complete with inlet & outlet flange as standard.*
- *Penta post construction with Aluminum corner piece, column and reinforced galvanized sheet panel.*
- *Tested in accordance to standard BS EN 12101-3 : 2002, complies with the performance criteria for 400℃ at 2 hours and certified by 'TÜV SÜD PSB'.*
- *Acoustic lining is available upon request.*
- *Standard acoustic lining employs galvanized sheet facing. Perforated sheet facing is available upon request.*
- *Motor should be selected to handle air at ambient temperature based on specified air volume & pressure. This is to allow periodic testing of the fan.*

Dimension

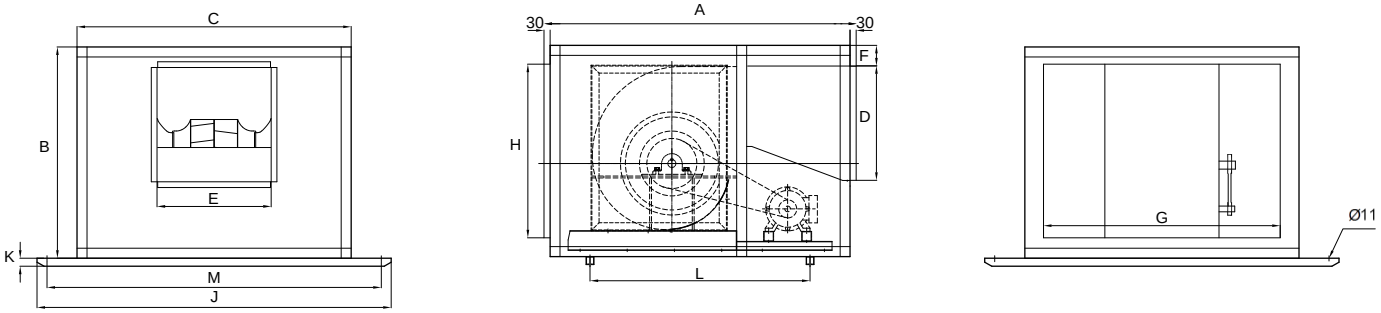

All Dimensions are in mm.

Model	A	B	C	D	E	F	G	H △	J	K	L	M	Weight* (kg)	Max. Motor Frame Size
CPF200	1060	736	810	322	322	123	620	546	1210	40	700	1110	61	D90
CPF225	1060	736	810	322	322	123	620	546	1210	40	700	1110	61	D90
CPF250	1060	736	810	322	322	123	620	546	1210	40	700	1110	61	D90
CPF280	1180	798	900	360	360	123	710	608	1300	40	820	1200	67	D112
CPF315	1260	871	1000	404	404	123	810	681	1400	40	900	1300	81	D112
CPF355	1360	954	1109	452	452	123	919	764	1509	40	940	1409	93	D132
CPF400	1460	954	1234	506	506	123	1044	764	1634	40	1040	1534	110	D132
CPF450	1560	1055	1371	568	568	123	1181	865	1771	40	1140	1671	129	D132
CPF500	1660	1175	1568	638	638	123	1348	955	1968	50	1240	1868	146	D160
CPF560	1760	1285	1742	714	714	123	1522	1065	2142	50	1340	2042	154	D160
CPF630	1960	1410	1940	800	800	123	1720	1190	2340	50	1540	2240	187	D180
CPF710	2160	1584	2164	898	898	123	1944	1364	2664	100	1700	2564	249	D180
CPF800	2300	1750	2413	1006	1006	123	2193	1530	2913	100	1840	2813	290	D225
CPF900	2590	1930	2681	1130	1130	123	2461	1710	3181	125	2170	3081	335	D250
CPF1000	2950	2090	3000	1266	1266	123	2780	1870	3500	150	2490	3400	389	D315

△ Dimension may vary. Please consult KRUGER.

* Weight without fan, motor and drive transmission.

The company is always improving and developing its products, therefore the company reserves the right of making changes to the illustrated products. Certified dimension can be provided upon request.

LEA043.E2 February 2018
Edition 6
Printed in February 2018

KRUGER VENTILATION INDUSTRIES ASIA CO LTD
- 30/159 Moo 1, Sinsakorn Industrial Estate, Chetsadawithi road, Khok Kham, Mueng, Samutsakorn 74000, Thailand
- Tel +662 1054298 - Fax+662 0248256-9
- www.krugerfan.com

A member of Soler&Palau Ventilation Group