KRUGER

KRA Series

Splitter Attenuator

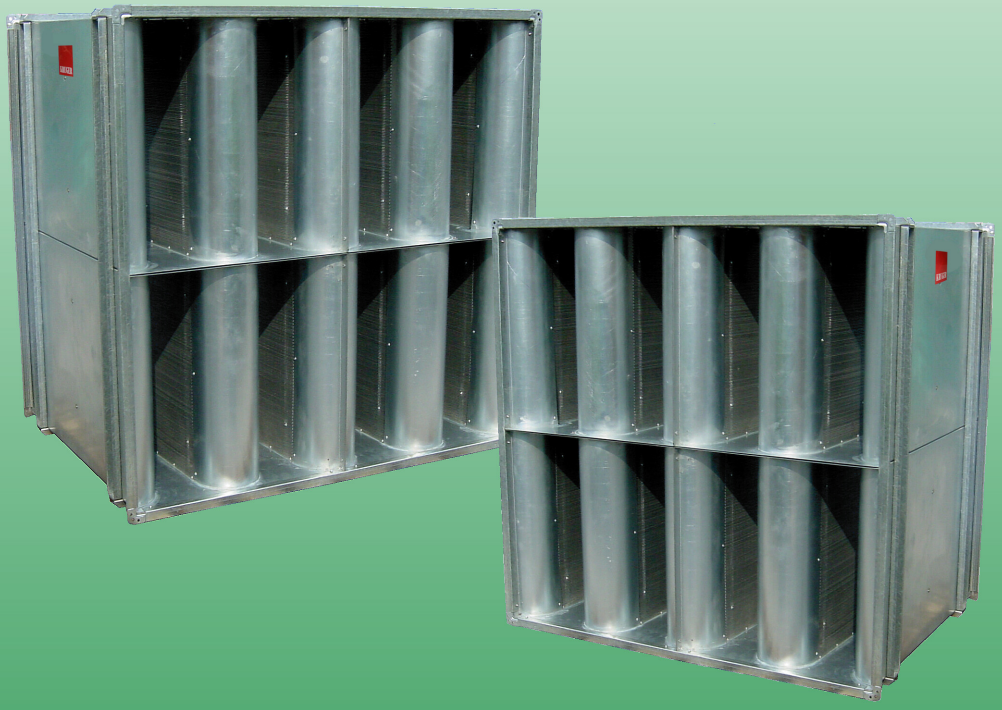



KRA Series
Splitter Attenuator

TEST METHOD

KRUGER Type KRA rectangular splitter attenuators have been tested in accordance with ISO 7235 – Measurement Procedures for Ducted Silencers. Test results are determined in a "duct-to-reverberation room" laboratory facility. Performance data shown include static and dynamic insertion loss, self generated airflow noise, and pressure loss in the direction of airflow.

Certified by TÜV SÜD which is a leading international service organization focusing on consulting, testing, certification and training. KRA series was tested in accordance with BS EN 12101-3:2002 and satisfies the performance criteria for Class F250, F300, F400.

Elbow attenuator is available, for more information, please contact your nearest Kruger office for details.

Insertion Loss

The static insertion (Airway velocity = 0m/s) was measured without airflow through the attenuators, while dynamic insertion (Airway velocity > 0m/s) was measured with airflow travelling in the direction of noise travel. Insertion loss is a measure of the noise reduction characteristics of an attenuator. Insertion loss test data is obtained from substitution method where the attenuator is being replaced by an exactly matching ductwork.

Regenerated Noise

Additional noise occurs when air passes over fixed duct elements such as splitters in attenuators. These noises are due to the changing cross sections in the attenuators. It is normally severe at high air velocities.

Pressure Drop

Pressure loss across the attenuator increases with attenuator's length and insertion loss. Attenuators with reduced airway area have higher insertion loss, however the higher flow restriction will induce a larger pressure drop.

CONSTRUCTION

Casings

The casings are constructed of high quality pre-galvanised steel sheets. The modular system allows KRA attenuators to be manufactured in an unlimited size to handle any specified airflow. The larger attenuators would normally be supplied in sections for ease of handling on site.

Flange Connections

Type KRA rectangular attenuators are complete with metal flanges as standard on all single units and multi-section units with mounting hole at each of the corners.

Acoustic Splitters

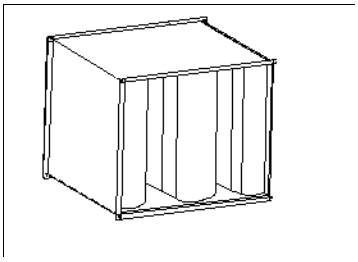

The acoustic splitters consist of a pre-galvanised steel framework into which is packed acoustic media. The media is consistently packed so as to negate voids. The splitter frames are fixed firmly into the attenuator casing. The method of splitter construction used on KRA attenuators provides an extremely stable and robust assembly.

The acoustic media in-fill is covered in a glass fibre facing to prevent the erosion of particles into the air-stream. As standard, the in-fill is then covered with pre-galvanised perforated sheet steel. Both ends of the splitter sections are fitted with bull-nose fairings in order to reduce pressure loss and give better re-entry conditions for the attenuated air.

Acoustic Media In-fill

The in-fill is mineral fibre which has Class 1 rating for surface spread of flame, as measured to BS476 and a non-combustible rating when exposed to BS476 Part 4. The splitters are suitable for air velocities up to 30 m/s.

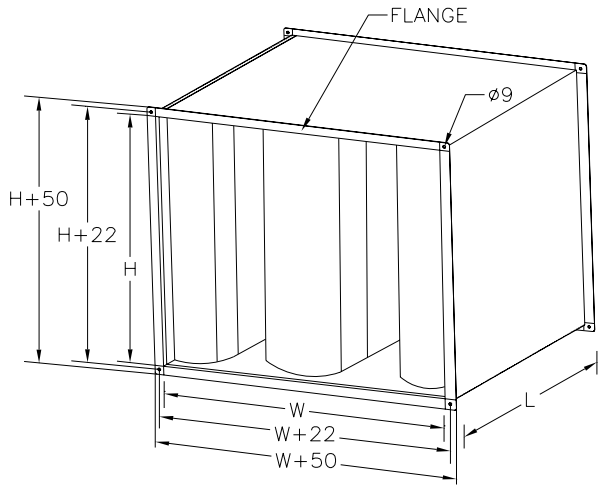

TYPE DESIGNATION

KRA 600-400 / M 500 / 1000 x 1200 x 1500

Model	Module	Width W (mm)	Height H (mm)	Length L (mm)

WEIGHT

Table 1 shows the weights of attenuator for height 600mm.

Model	Unit Module Width	Weight for attenuator lengths, L (kg)						
	W'	600	900	1200	1500	1800	2100	2400
KRA 400-150	275	30	36	49	63	76	86	102
KRA 400-200	300	30	37	50	64	76	87	103
KRA 400-300	350	31	38	51	65	79	90	106
KRA 400-350	375	32	39	53	66	80	92	108
KRA 600-200	400	32	42	57	73	89	104	120
KRA 600-300	450	33	43	59	75	90	106	122
KRA 600-400	500	34	44	60	76	92	109	125
KRA 600-500	550	34	45	61	78	94	111	127
KRA 600-600	600	35	46	62	79	96	113	130

Table 1 Attenuator Weight of Height 600mm

To determine the weight of other attenuator models, apply the equation as given:-

Required Attenuator Weight = Weight in Table. 1 x $\frac{H}{600}$ x $\frac{W}{w'}$ (kg)

Example:

Attenuator model - KRA600-600 / M600 / 1200 x 900 x 1500

Width of attenuator, W = 1200
Height of attenuator, H = 900

From Table 1:

Weight of KRA 600-600, L=1500, = 79 kg

Required Attenuator Weight = 79 x $\frac{900}{600}$ x $\frac{1200}{600}$ = 237 kg

SELECTION PROCEDURE

1. Select the recommended NC level for the type of area concerned. Table 4 of Recommended Indoor Design Criteria can be referred to as a general guide.

2. Calculate the attenuation required to reach the required NC level from the existing sound power level of the fan.

3. From tables of insertion loss, Table 5-6, select an attenuator type whose insertion loss is closest to but not less than the required at every frequency of the octave band to achieve the desired NC level.

4. From the required airflow Q, check for the values of actual Air way velocity and the complete model for the selected attenuator type from the Table 2 and 3 and the resulted pressure drop across the attenuator from pressure loss charts, Chart 1 and 2.

5. If both the pressure drop and the size of attenuator model are acceptable, proceed to step 6. If pressure drop is too high, repeat the attenuator selection with a larger model of the same attenuator type. If space is a constraint, reselect the attenuator type or remain the same attenuator type but select a smaller model size (smaller width and height), however a smaller model will induce a larger pressure drop. A compromise must be made between the allowable pressure drop and space constraint.

6. When placing the order, the selected attenuator model bears the designation indicated under the section of "Type Designation".

EXAMPLE OF SELECTION

1. Room Type: Gymnasium
   Required NC level: NC 45

2. Fan model: BSB 450, Q=1.2m³/s, Ps=700Pa.

Octave band mid frequency, Hz	**63**	**125**	**250**	**500**	**1k**	**2k**	**4k**	**8k**
NC level 45, dB	67	60	54	49	46	44	43	42
Fan sound power level, dB	79	78	80	76	73	69	65	61
Required attenuation	12	18	26	27	27	25	22	19

3. From tables of Insertion Loss,(Table 5 and 6)
   Attenuator Type KRA600-200/M400 of Length 1800, with insertion loss values at airway velocity =8m/s as shown below, is selected.

Type	**Length**	**Airway velocity (m/s)**	**One Octave Band Frequency (Hz)**							
			63	**125**	**250**	**500**	**1k**	**2k**	**4k**	**8k**
KRA 600-200 (Module 400)	1800	0	13	22	35	42	50	50	43	28
		4	12	21	35	41	50	50	44	29
		6	12	21	35	41	50	50	44	29
		8	12	21	34	41	50	50	44	29

4. From the table of Airflow Data of KRA 600 (Table 3) at the required airflow of 1.2m³/s, and for attenuator type KRA600-200 to have a Airway velocity=8m/s,
KRA600-200 of width 800mm and height 900mm or KRA600-200 of width 1200mm and height 600mm can be selected.
From interpolation, Actual Airway Velocity = 7 m/s

Airway Vel (m/s)			6	8	10	12	14	16
Type	**W**	**H**	**Airflow (m³/s)**					
KRA 600-200 (Module 400)	800	600	0.72	0.96	1.20	1.44	1.68	1.92
		900	1.08	1.44	1.80	2.16	2.52	2.88
		1200	1.44	1.92	2.40	2.88	3.36	3.84
		1500	1.80	2.40	3.00	3.60	4.20	4.80
	1200	600	1.08	1.44	1.80	2.16	2.52	2.88
		900	1.62	2.16	2.70	3.24	3.78	4.32
		1200	2.16	2.88	3.60	4.32	5.04	5.76
		1500	2.70	3.60	4.50	5.40	6.30	7.20
		1800	3.24	4.32	5.40	6.48	7.56	8.64

5. If KRA600-200, width 800mm, height 900mm, and length 1800mm is selected.

From chart 2, for KRA600-200, at velocity 7m/s,
Length 1500, Pressure Loss = 13 Pa.
Length 1800, factor = 1.07
Actual Pressure loss = 13 x 1.07
= 13.9 Pa

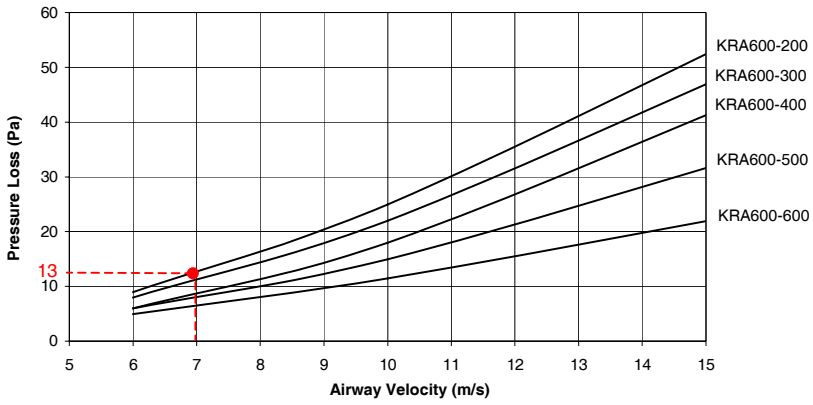

6. Designation of selected attenuator is KRA600-200/M400/800 x 900 x 1800

PRESSURE LOSS - Aerodynamic Performance Data

KRA 400

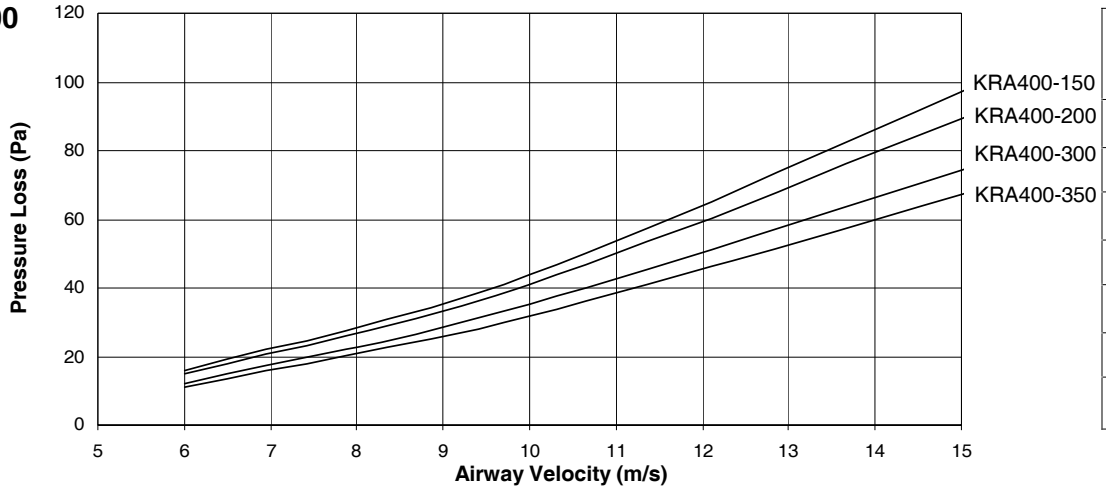

Length (mm)	Factor
600	0.93
900	0.94
1200	0.97
1500	1.0
1800	1.03
2100	1.06
2400	1.09

Chart 1 Pressure Drop Across Attenuators Vs Velocity (KRA400)

* The pressure loss curve above relates to attenuator length 1500mm. For other lengths, apply factors in the table on the right.

Airway Vel (m/s)			6	8	10	12	14	16
Type	W	H	Airflow (m³/s)					
KRA 400-150 (Module 275)	275	300	0.14	0.18	0.23	0.27	0.32	0.36
		450	0.20	0.27	0.34	0.41	0.47	0.54
		600	0.27	0.36	0.45	0.54	0.63	0.72
		750	0.34	0.45	0.56	0.68	0.79	0.90
		900	0.41	0.54	0.68	0.81	0.95	1.08
	550	450	0.41	0.54	0.68	0.81	0.95	1.08
		600	0.54	0.72	0.90	1.08	1.26	1.44
		750	0.68	0.90	1.13	1.35	1.58	1.80
		900	0.81	1.08	1.35	1.62	1.89	2.16
		1200	1.08	1.44	1.80	2.16	2.52	2.88
	825	600	0.81	1.08	1.35	1.62	1.89	2.16
		750	1.01	1.35	1.69	2.03	2.36	2.70
		900	1.22	1.62	2.03	2.43	2.84	3.24
		1200	1.62	2.16	2.70	3.24	3.78	4.32
		1500	2.03	2.70	3.38	4.05	4.73	5.40
	1100	600	1.08	1.44	1.80	2.16	2.52	2.88
		750	1.35	1.80	2.25	2.70	3.15	3.60
		900	1.62	2.16	2.70	3.24	3.78	4.32
		1200	2.16	2.88	3.60	4.32	5.04	5.76
		1500	2.70	3.60	4.50	5.40	6.30	7.20
	1375	750	1.69	2.25	2.81	3.38	3.94	4.50
		900	2.03	2.70	3.38	4.05	4.73	5.40
		1200	2.70	3.60	4.50	5.40	6.30	7.20
		1500	3.38	4.50	5.63	6.75	7.88	9.00
		1800	4.05	5.40	6.75	8.10	9.45	10.80
KRA 400-200 (Module 300)	300	300	0.18	0.24	0.30	0.36	0.42	0.48
		450	0.27	0.36	0.45	0.54	0.63	0.72
		600	0.36	0.48	0.60	0.72	0.84	0.96
		750	0.45	0.60	0.75	0.90	1.05	1.20
		900	0.54	0.72	0.90	1.08	1.26	1.44
	600	450	0.54	0.72	0.90	1.08	1.26	1.44
		600	0.72	0.96	1.20	1.44	1.68	1.92
		750	0.90	1.20	1.50	1.80	2.10	2.40
		900	1.08	1.44	1.80	2.16	2.52	2.88
		1200	1.44	1.92	2.40	2.88	3.36	3.84
	900	600	1.08	1.44	1.80	2.16	2.52	2.88
		750	1.35	1.80	2.25	2.70	3.15	3.60
		900	1.62	2.16	2.70	3.24	3.78	4.32
		1200	2.16	2.88	3.60	4.32	5.04	5.76
		1500	2.70	3.60	4.50	5.40	6.30	7.20
	1200	900	2.16	2.88	3.60	4.32	5.04	5.76
		1200	2.88	3.84	4.80	5.76	6.72	7.68
		1500	3.60	4.80	6.00	7.20	8.40	9.60
		1800	4.32	5.76	7.20	8.64	10.08	11.52
	1500	900	2.70	3.60	4.50	5.40	6.30	7.20
		1200	3.60	4.80	6.00	7.20	8.40	9.60
		1500	4.50	6.00	7.50	9.00	10.50	12.00
		1800	5.40	7.20	9.00	10.80	12.60	14.40
	1800	900	3.24	4.32	5.40	6.48	7.56	8.64
		1200	4.32	5.76	7.20	8.64	10.08	11.52
		1500	5.40	7.20	9.00	10.80	12.60	14.40
		1800	6.48	8.64	10.80	12.96	15.12	17.28

Airway Vel (m/s)			6	8	10	12	14	16
Type	W	H	Airflow (m³/s)					
KRA 400-300 (Module 350)	350	300	0.27	0.36	0.45	0.54	0.63	0.72
		450	0.41	0.54	0.68	0.81	0.95	1.08
		600	0.54	0.72	0.90	1.08	1.26	1.44
		750	0.68	0.90	1.13	1.35	1.58	1.80
		900	0.81	1.08	1.35	1.62	1.89	2.16
	700	600	1.08	1.44	1.80	2.16	2.52	2.88
		750	1.35	1.80	2.25	2.70	3.15	3.60
		900	1.62	2.16	2.70	3.24	3.78	4.32
		1200	2.16	2.88	3.60	4.32	5.04	5.76
		1500	2.70	3.60	4.50	5.40	6.30	7.20
	1050	600	1.62	2.16	2.70	3.24	3.78	4.32
		900	2.43	3.24	4.05	4.86	5.67	6.48
		1200	3.24	4.32	5.40	6.48	7.56	8.64
		1500	4.05	5.40	6.75	8.10	9.45	10.80
		1800	4.86	6.48	8.10	9.72	11.34	12.96
	1400	900	3.24	4.32	5.40	6.48	7.56	8.64
		1200	4.32	5.76	7.20	8.64	10.08	11.52
		1500	5.40	7.20	9.00	10.80	12.60	14.40
		1800	6.48	8.64	10.80	12.96	15.12	17.28
	1750	900	4.05	5.40	6.75	8.10	9.45	10.80
		1200	5.40	7.20	9.00	10.80	12.60	14.40
		1500	6.75	9.00	11.25	13.50	15.75	18.00
		1800	8.10	10.80	13.50	16.20	18.90	21.60
	2100	900	4.86	6.48	8.10	9.72	11.34	12.96
		1200	6.48	8.64	10.80	12.96	15.12	17.28
		1500	8.10	10.80	13.50	16.20	18.90	21.60
		1800	9.72	12.96	16.20	19.44	22.68	25.92
KRA 400-350 (Module 375)	375	300	0.32	0.42	0.53	0.63	0.74	0.84
		450	0.47	0.63	0.79	0.95	1.10	1.26
		600	0.63	0.84	1.05	1.26	1.47	1.68
		750	0.79	1.05	1.31	1.58	1.84	2.10
		900	0.95	1.26	1.58	1.89	2.21	2.52
	750	600	1.26	1.68	2.10	2.52	2.94	3.36
		900	1.89	2.52	3.15	3.78	4.41	5.04
		1200	2.52	3.36	4.20	5.04	5.88	6.72
		1500	3.15	4.20	5.25	6.30	7.35	8.40
	1125	600	1.89	2.52	3.15	3.78	4.41	5.04
		900	2.84	3.78	4.73	5.67	6.62	7.56
		1200	3.78	5.04	6.30	7.56	8.82	10.08
		1500	4.73	6.30	7.88	9.45	11.03	12.60
		1800	5.67	7.56	9.45	11.34	13.23	15.12
	1500	900	3.78	5.04	6.30	7.56	8.82	10.08
		1200	5.04	6.72	8.40	10.08	11.76	13.44
		1500	6.30	8.40	10.50	12.60	14.70	16.80
		1800	7.56	10.08	12.60	15.12	17.64	20.16
	1875	900	4.73	6.30	7.88	9.45	11.03	12.60
		1200	6.30	8.40	10.50	12.60	14.70	16.80
		1500	7.88	10.50	13.13	15.75	18.38	21.00
		1800	9.45	12.60	15.75	18.90	22.05	25.20
	2250	900	5.67	7.56	9.45	11.34	13.23	15.12
		1200	7.56	10.08	12.60	15.12	17.64	20.16
		1500	9.45	12.60	15.75	18.90	22.05	25.20
		1800	11.34	15.12	18.90	22.68	26.46	30.24

Table 2. Dimensions and Airflow Data of Attenuator KRA 400

KRA 600

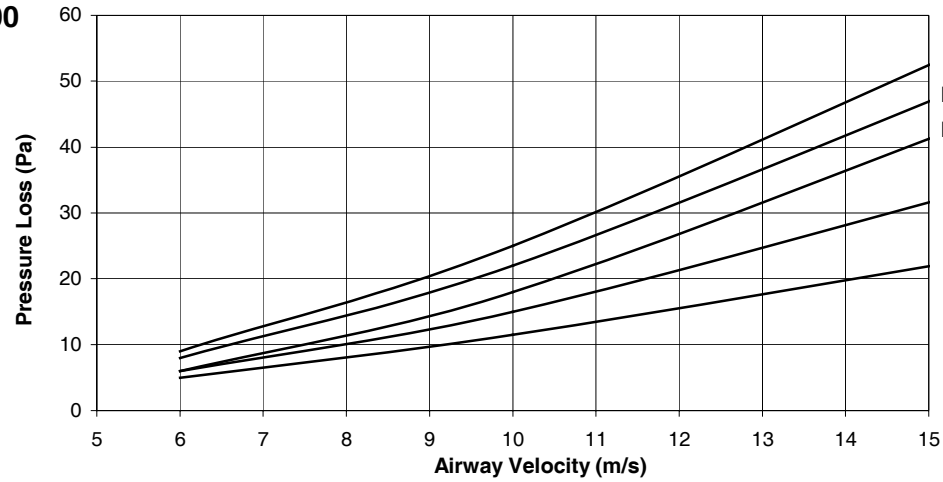

Length (mm)	Factor
600	0.87
900	0.88
1200	0.93
1500	1.0
1800	1.07
2100	1.13
2400	1.15

Chart 2 Pressure Drop Across Attenuators Vs Velocity (KRA600)

* The pressure loss curve above relates to attenuator length 1500mm. For other lengths, apply factors in the table on the right.

Airway Vel (m/s)			6	8	10	12	14	16
Type	W	H	Airflow (m³/s)					
KRA 600-200 (Module 400)	400	300	0.18	0.24	0.30	0.36	0.42	0.48
		450	0.27	0.36	0.45	0.54	0.63	0.72
		600	0.36	0.48	0.60	0.72	0.84	0.96
		750	0.45	0.60	0.75	0.90	1.05	1.20
		900	0.54	0.72	0.90	1.08	1.26	1.44
	800	600	0.72	0.96	1.20	1.44	1.68	1.92
		900	1.08	1.44	1.80	2.16	2.52	2.88
		1200	1.44	1.92	2.40	2.88	3.36	3.84
		1500	1.80	2.40	3.00	3.60	4.20	4.80
	1200	600	1.08	1.44	1.80	2.16	2.52	2.88
		900	1.62	2.16	2.70	3.24	3.78	4.32
		1200	2.16	2.88	3.60	4.32	5.04	5.76
		1500	2.70	3.60	4.50	5.40	6.30	7.20
		1800	3.24	4.32	5.40	6.48	7.56	8.64
	1600	900	2.16	2.88	3.60	4.32	5.04	5.76
		1200	2.88	3.84	4.80	5.76	6.72	7.68
		1500	3.60	4.80	6.00	7.20	8.40	9.60
		1800	4.32	5.76	7.20	8.64	10.08	11.52
	2000	900	2.70	3.60	4.50	5.40	6.30	7.20
		1200	3.60	4.80	6.00	7.20	8.40	9.60
		1500	4.50	6.00	7.50	9.00	10.50	12.00
		1800	5.40	7.20	9.00	10.80	12.60	14.40
	2400	900	3.24	4.32	5.40	6.48	7.56	8.64
		1200	4.32	5.76	7.20	8.64	10.08	11.52
		1500	5.40	7.20	9.00	10.80	12.60	14.40
		1800	6.48	8.64	10.80	12.96	15.12	17.28
KRA 600-300 (Module 450)	450	300	0.27	0.36	0.45	0.54	0.63	0.72
		450	0.41	0.54	0.68	0.81	0.95	1.08
		600	0.54	0.72	0.90	1.08	1.26	1.44
		750	0.68	0.90	1.13	1.35	1.58	1.80
		900	0.81	1.08	1.35	1.62	1.89	2.16
	900	450	0.81	1.08	1.35	1.62	1.89	2.16
		600	1.08	1.44	1.80	2.16	2.52	2.88
		900	1.62	2.16	2.70	3.24	3.78	4.32
		1200	2.16	2.88	3.60	4.32	5.04	5.76
		1500	2.70	3.60	4.50	5.40	6.30	7.20
	1350	600	1.62	2.16	2.70	3.24	3.78	4.32
		900	2.43	3.24	4.05	4.86	5.67	6.48
		1200	3.24	4.32	5.40	6.48	7.56	8.64
		1500	4.05	5.40	6.75	8.10	9.45	10.80
		1800	4.86	6.48	8.10	9.72	11.34	12.96
	1800	900	3.24	4.32	5.40	6.48	7.56	8.64
		1200	4.32	5.76	7.20	8.64	10.08	11.52
		1500	5.40	7.20	9.00	10.80	12.60	14.40
		1800	6.48	8.64	10.80	12.96	15.12	17.28
	2250	900	4.05	5.40	6.75	8.10	9.45	10.80
		1200	5.40	7.20	9.00	10.80	12.60	14.40
		1500	6.75	9.00	11.25	13.50	15.75	18.00
		1800	8.10	10.80	13.50	16.20	18.90	21.60
	2700	1500	8.10	10.80	13.50	16.20	18.90	21.60
		1800	9.72	12.96	16.20	19.44	22.68	25.92
KRA 600-400 (Module 500)	500	300	0.36	0.48	0.60	0.72	0.84	0.96
		450	0.54	0.72	0.90	1.08	1.26	1.44
		600	0.72	0.96	1.20	1.44	1.68	1.92
		750	0.90	1.20	1.50	1.80	2.10	2.40
		900	1.08	1.44	1.80	2.16	2.52	2.88

Airway Vel (m/s)			6	8	10	12	14	16
Type	W	H	Airflow (m³/s)					
KRA 600-400 (Module 500)	1000	600	1.44	1.92	2.40	2.88	3.36	3.84
		900	2.16	2.88	3.60	4.32	5.04	5.76
		1200	2.88	3.84	4.80	5.76	6.72	7.68
		1500	3.60	4.80	6.00	7.20	8.40	9.60
	1500	600	2.16	2.88	3.60	4.32	5.04	5.76
		900	3.24	4.32	5.40	6.48	7.56	8.64
		1200	4.32	5.76	7.20	8.64	10.08	11.52
		1500	5.40	7.20	9.00	10.80	12.60	14.40
		1800	6.48	8.64	10.80	12.96	15.12	17.28
	2000	900	4.32	5.76	7.20	8.64	10.08	11.52
		1200	5.76	7.68	9.60	11.52	13.44	15.36
		1500	7.20	9.60	12.00	14.40	16.80	19.20
		1800	8.64	11.52	14.40	17.28	20.16	23.04
	2500	900	5.40	7.20	9.00	10.80	12.60	14.40
		1200	7.20	9.60	12.00	14.40	16.80	19.20
		1500	9.00	12.00	15.00	18.00	21.00	24.00
		1800	10.80	14.40	18.00	21.60	25.20	28.80
KRA 600-500 (Module 550)	550	300	0.45	0.60	0.75	0.90	1.05	1.20
		450	0.68	0.90	1.13	1.35	1.58	1.80
		600	0.90	1.20	1.50	1.80	2.10	2.40
		750	1.13	1.50	1.88	2.25	2.63	3.00
		900	1.35	1.80	2.25	2.70	3.15	3.60
	1100	600	1.80	2.40	3.00	3.60	4.20	4.80
		900	2.70	3.60	4.50	5.40	6.30	7.20
		1200	3.60	4.80	6.00	7.20	8.40	9.60
		1500	4.50	6.00	7.50	9.00	10.50	12.00
	1650	900	4.05	5.40	6.75	8.10	9.45	10.80
		1200	5.40	7.20	9.00	10.80	12.60	14.40
		1500	6.75	9.00	11.25	13.50	15.75	18.00
		1800	8.10	10.80	13.50	16.20	18.90	21.60
	2200	900	5.40	7.20	9.00	10.80	12.60	14.40
		1200	7.20	9.60	12.00	14.40	16.80	19.20
		1500	9.00	12.00	15.00	18.00	21.00	24.00
		1800	10.80	14.40	18.00	21.60	25.20	28.80
	2750	900	6.75	9.00	11.25	13.50	15.75	18.00
		1200	9.00	12.00	15.00	18.00	21.00	24.00
		1500	11.25	15.00	18.75	22.50	26.25	30.00
		1800	13.50	18.00	22.50	27.00	31.50	36.00
KRA 600-600 (Module 600)	600	300	0.54	0.72	0.90	1.08	1.26	1.44
		450	0.81	1.08	1.35	1.62	1.89	2.16
		600	1.08	1.44	1.80	2.16	2.52	2.88
		750	1.35	1.80	2.25	2.70	3.15	3.60
		900	1.62	2.16	2.70	3.24	3.78	4.32
	1200	600	2.16	2.88	3.60	4.32	5.04	5.76
		750	2.70	3.60	4.50	5.40	6.30	7.20
		900	3.24	4.32	5.40	6.48	7.56	8.64
		1200	4.32	5.76	7.20	8.64	10.08	11.52
		1500	5.40	7.20	9.00	10.80	12.60	14.40
	1800	600	3.24	4.32	5.40	6.48	7.56	8.64
		750	4.05	5.40	6.75	8.10	9.45	10.80
		900	4.86	6.48	8.10	9.72	11.34	12.96
		1200	6.48	8.64	10.80	12.96	15.12	17.28
		1500	8.10	10.80	13.50	16.20	18.90	21.60
		1800	9.72	12.96	16.20	19.44	22.68	25.92
	2400	900	6.48	8.64	10.80	12.96	15.12	17.28
		1200	8.64	11.52	14.40	17.28	20.16	23.04
		1500	10.80	14.40	18.00	21.60	25.20	28.80
		1800	12.96	17.28	21.60	25.92	30.24	34.56

Table 3. Dimensions and Airflow Data of Attenuator KRA 600

INSERTION LOSS – Acoustic Performance Data

KRA 400

Insertion Loss (dB)										
Type	Length	Airway velocity (m/s)	One Octave Band Frequency (Hz)							
			63	125	250	500	1k	2k	4k	8k
KRA 400-150 (Module 275)	600	0	5	7	14	22	31	34	26	19
		4	5	6	14	22	31	34	26	19
		6	5	6	13	22	30	33	26	19
		8	3	6	13	22	30	33	26	19
	900	0	6	9	20	31	37	40	34	24
		4	6	9	20	31	37	40	33	24
		6	6	9	20	31	37	40	33	24
		8	5	9	19	30	37	40	33	24
	1200	0	7	10	26	38	42	43	41	28
		4	7	10	26	38	42	43	40	28
		6	7	10	26	38	42	43	40	28
		8	6	10	25	38	42	43	40	28
	1500	0	8	12	32	45	47	47	49	33
		4	8	12	32	45	47	47	47	33
		6	8	12	32	45	47	47	47	33
		8	8	12	31	44	47	47	47	33
	1800	0	9	13	36	48	49	49	51	36
		4	9	13	35	48	50	49	48	37
		6	9	13	35	48	50	49	48	37
		8	9	13	35	47	50	49	48	37
	2100	0	10	15	39	50	50	50	52	39
		4	10	15	38	50	50	50	48	40
		6	10	14	38	50	50	50	48	41
		8	10	14	38	50	50	50	48	41
	2400	0	11	16	43	51	52	50	54	43
		4	11	16	42	51	52	50	49	44
		6	11	16	41	51	52	50	49	45
		8	11	16	41	51	52	49	49	45
KRA 400-200 (Module 300)	600	0	5	7	14	22	28	29	22	17
		4	5	7	14	22	28	29	22	18
		6	5	6	14	22	28	29	22	18
		8	4	7	14	21	28	29	22	18
	900	0	7	8	20	28	34	34	28	21
		4	7	8	20	28	34	34	28	22
		6	7	8	19	28	34	34	28	22
		8	6	8	19	27	34	34	28	22
	1200	0	7	10	23	34	39	40	34	24
		4	7	10	23	34	39	40	34	25
		6	7	10	22	34	39	40	34	25
		8	7	10	22	33	39	40	34	25
	1500	0	8	11	29	40	44	44	41	26
		4	8	12	29	40	44	44	39	27
		6	8	11	28	40	44	44	39	27
		8	8	11	28	39	44	44	39	27
	1800	0	9	12	33	44	47	46	42	30
		4	9	13	32	44	47	47	40	31
		6	9	12	32	43	47	47	40	31
		8	8	12	32	43	47	47	40	31
	2100	0	9	16	37	48	50	48	46	33
		4	9	14	35	47	50	49	42	33
		6	9	13	35	47	50	49	42	33
		8	9	13	34	47	50	49	42	34
	2400	0	11	15	39	50	51	50	49	36
		4	11	15	38	50	51	50	45	36
		6	11	15	37	50	51	50	45	36
		8	10	14	37	50	51	50	45	37

Insertion Loss (dB)										
Type	Length	Airway velocity (m/s)	One Octave Band Frequency (Hz)							
			63	125	250	500	1k	2k	4k	8k
KRA 400-300 (Module 350)	600	0	5	6	12	17	23	22	15	10
		4	5	6	12	17	22	22	15	10
		6	5	6	11	17	22	22	15	10
		8	4	6	11	16	22	22	15	10
	900	0	6	7	15	21	28	27	18	12
		4	6	7	15	21	28	27	18	12
		6	6	7	15	21	28	27	18	12
		8	5	7	14	20	28	27	18	12
	1200	0	6	9	18	26	33	33	22	14
		4	6	9	18	26	33	33	22	14
		6	6	9	17	26	33	33	22	14
		8	6	9	17	25	33	33	22	15
	1500	0	7	10	21	30	39	38	25	15
		4	7	10	20	30	38	38	25	15
		6	7	10	20	30	38	38	25	15
		8	6	10	20	29	38	38	25	16
	1800	0	8	11	25	35	43	42	28	17
		4	8	11	24	35	43	42	28	17
		6	8	11	24	34	43	42	28	17
		8	7	11	24	34	43	42	28	18
	2100	0	8	14	28	40	49	46	31	18
		4	9	12	27	40	47	46	29	18
		6	9	12	27	39	47	46	29	19
		8	8	12	27	39	47	46	30	19
	2400	0	10	12	31	43	50	50	31	20
		4	10	12	30	43	50	50	31	20
		6	10	12	30	43	49	50	31	21
		8	10	12	30	42	49	50	31	21
KRA 400-350 (Module 375)	600	0	6	6	10	12	19	18	13	11
		4	6	5	10	12	19	18	13	11
		6	6	5	10	12	19	18	13	11
		8	6	5	9	12	19	18	13	11
	900	0	6	7	13	17	25	24	15	12
		4	6	7	13	17	25	24	15	11
		6	6	7	13	16	25	24	15	12
		8	5	7	12	16	24	24	15	12
	1200	0	6	8	16	22	31	29	17	12
		4	6	8	15	22	30	29	17	12
		6	6	8	15	21	30	29	17	12
		8	5	8	15	21	30	29	17	12
	1500	0	6	10	19	27	36	34	19	13
		4	6	9	18	26	36	34	19	13
		6	6	9	18	26	36	34	19	13
		8	5	9	18	26	35	34	19	13
	1800	0	7	10	22	32	41	40	20	14
		4	7	10	21	31	41	40	20	14
		6	7	10	21	31	40	40	20	14
		8	7	10	21	31	40	40	21	14
	2100	0	7	12	25	36	47	44	22	13
		4	8	11	24	35	46	45	22	15
		6	8	11	24	35	45	45	22	15
		8	8	11	24	35	45	45	22	15
	2400	0	9	11	27	40	50	49	23	15
		4	9	11	27	39	50	49	24	15
		6	9	11	26	39	49	49	24	15
		8	9	11	26	39	49	49	24	15

Table 5. Dynamic Insertion Loss Ratings KRA 400 Series

* The static insertion loss performance figures published in this catalogue must not be used for special clean air projects. Please contact nearest Kruger office for further details.

KRA 600

Insertion Loss (dB)										
Type	Length	Airway velocity (m/s)	One Octave Band Frequency (Hz)							
			63	125	250	500	1k	2k	4k	8k
KRA 600-200 (Module 400)	600	0	7	10	16	20	27	30	22	16
		4	7	9	15	20	27	29	22	16
		6	7	9	15	20	27	29	22	16
		8	7	9	15	20	26	29	22	16
	900	0	9	13	22	27	35	37	28	20
		4	8	13	21	26	34	37	29	20
		6	8	13	21	26	34	37	29	20
		8	8	13	21	26	34	37	29	20
	1200	0	10	17	28	33	42	45	34	23
		4	9	17	27	32	42	45	35	24
		6	9	16	27	32	42	45	35	24
		8	9	16	27	32	42	45	35	24
	1500	0	12	20	32	39	50	50	40	27
		4	10	20	31	39	50	50	41	27
		6	10	20	31	38	49	50	41	27
		8	10	20	31	38	49	50	41	27
	1800	0	13	22	35	42	50	50	43	28
		4	12	21	35	41	50	50	44	29
		6	12	21	35	41	50	50	44	29
		8	12	21	34	41	50	50	44	29
	2100	0	16	23	37	45	51	50	46	29
		4	15	22	37	44	51	52	44	30
		6	15	22	37	44	51	52	44	30
		8	15	22	36	44	50	52	44	31
	2400	0	15	24	40	48	53	50	49	31
		4	15	24	39	47	53	52	50	32
		6	15	23	39	47	53	52	50	32
		8	15	23	39	47	53	52	50	33
KRA 600-300 (Module 450)	600	0	7	8	13	17	22	23	16	13
		4	7	8	13	17	22	23	17	13
		6	7	8	13	17	22	23	17	13
		8	7	8	13	16	22	23	17	13
	900	0	8	11	18	22	29	28	21	16
		4	8	11	18	22	29	28	22	16
		6	8	11	18	22	29	28	22	16
		8	7	11	18	22	29	28	22	16
	1200	0	9	14	23	27	36	33	25	19
		4	8	14	23	27	36	33	26	19
		6	8	14	22	27	36	33	26	19
		8	8	14	22	27	36	33	26	19
	1500	0	10	17	27	33	43	40	30	21
		4	9	17	27	32	43	40	31	21
		6	9	17	26	32	43	40	31	21
		8	9	17	26	32	43	40	31	21
	1800	0	11	19	30	35	46	43	31	22
		4	10	19	30	35	46	43	32	22
		6	10	19	29	34	45	43	32	22
		8	10	19	29	34	45	43	32	22
	2100	0	13	20	31	37	48	46	33	22
		4	13	20	31	37	48	46	34	22
		6	13	19	30	36	48	46	34	23
		8	12	19	30	36	48	46	34	23
	2400	0	14	21	32	39	50	48	34	22
		4	14	20	32	39	50	48	35	23
		6	14	20	32	39	50	48	35	23
		8	14	20	32	38	49	48	35	23

Insertion Loss (dB)										
Type	Length	Airway velocity (m/s)	One Octave Band Frequency (Hz)							
			63	125	250	500	1k	2k	4k	8k
KRA 600-400 (Module 500)	600	0	6	7	11	13	17	16	11	9
		4	6	7	10	13	17	16	12	10
		6	6	7	10	13	17	16	12	10
		8	6	7	10	13	17	16	12	10
	900	0	7	10	15	18	24	21	14	11
		4	7	10	14	18	24	21	14	11
		6	7	10	14	18	24	22	14	11
		8	7	10	14	17	24	21	15	11
	1200	0	8	12	19	22	30	26	17	14
		4	8	12	19	22	30	26	17	13
		6	8	12	18	22	30	26	17	13
		8	7	12	18	22	30	26	17	13
	1500	0	10	14	23	26	36	31	19	16
		4	10	14	23	26	36	31	20	15
		6	10	14	22	26	36	31	20	15
		8	9	14	22	26	36	32	20	15
	1800	0	11	16	24	28	40	36	19	15
		4	11	16	24	28	39	37	20	15
		6	11	16	23	27	39	37	20	15
		8	10	16	23	27	39	37	20	15
	2100	0	13	17	25	29	43	39	19	14
		4	13	17	24	29	43	40	20	15
		6	13	17	24	29	42	40	21	15
		8	12	16	24	28	42	40	21	15
	2400	0	13	17	25	31	46	42	19	14
		4	13	17	25	30	46	43	21	14
		6	13	17	25	30	45	43	21	15
		8	12	16	25	30	45	43	21	15
KRA 600-500 (Module 550)	600	0	5	7	10	13	15	13	10	8
		4	5	7	9	12	15	14	11	9
		6	5	7	9	12	15	14	11	9
		8	4	7	9	12	15	14	11	9
	900	0	6	9	13	16	20	17	12	10
		4	6	9	12	15	20	17	12	10
		6	6	9	12	15	20	17	12	10
		8	4	9	12	15	20	17	12	10
	1200	0	7	12	16	19	25	20	14	11
		4	7	12	15	19	25	20	14	11
		6	7	12	15	19	25	20	14	11
		8	5	12	15	18	25	20	14	11
	1500	0	8	14	19	22	30	24	15	13
		4	8	14	19	22	30	24	16	12
		6	8	14	18	22	30	24	16	13
		8	5	13	18	22	30	24	16	13
	1800	0	9	14	20	24	34	28	16	13
		4	9	14	20	23	34	28	16	12
		6	9	14	20	23	33	28	16	13
		8	7	14	19	23	33	28	16	13
	2100	0	10	15	21	26	37	31	16	12
		4	10	15	21	25	37	31	17	12
		6	10	14	21	25	37	31	17	13
		8	9	14	21	25	37	32	17	13
	2400	0	11	15	23	27	41	34	16	12
		4	11	15	22	27	41	34	17	12
		6	11	15	22	27	40	34	17	13
		8	11	15	22	26	40	35	17	13

Table 6. Dynamic Insertion Loss Ratings KRA 600

* The static insertion loss performance figures published in this catalogue must not be used for special clean air projects. Please contact nearest Kruger office for further details.

KRA 600

Insertion Loss (dB)										
Type	Length	Airway velocity (m/s)	One Octave Band Frequency (Hz)							
			63	125	250	500	1k	2k	4k	8k
KRA 600-600 (Module 600)	600	0	4	6	9	9	11	9	9	7
		4	3	6	9	9	11	9	9	8
		6	3	6	9	9	11	9	9	8
		8	3	6	9	9	11	9	10	8
	900	0	5	8	11	14	17	12	10	8
		4	4	7	10	13	17	12	10	8
		6	4	7	10	13	17	12	10	9
		8	3	7	10	13	17	12	10	9
	1200	0	6	10	13	16	21	14	10	9
		4	6	9	12	15	20	14	11	9
		6	5	9	12	15	20	14	11	9
		8	3	9	12	15	20	14	11	10
	1500	0	7	11	15	18	25	17	11	10
		4	7	10	14	17	24	17	11	10
		6	6	10	14	17	24	17	12	10
		8	3	10	14	17	24	17	12	11
	1800	0	7	12	17	20	28	19	12	10
		4	7	11	16	19	28	19	12	10
		6	6	11	16	19	28	19	12	10
		8	4	11	16	19	28	19	12	11
	2100	0	8	13	18	22	32	22	13	10
		4	8	12	18	21	32	22	13	10
		6	7	12	17	21	31	22	13	10
		8	6	12	17	21	31	22	13	11
	2400	0	8	14	20	24	36	24	13	11
		4	8	13	19	23	35	24	13	10
		6	8	13	19	23	35	24	14	11
		8	8	13	19	23	35	25	14	11

Table 6. Dynamic Insertion Loss Ratings KRA 600

* The static insertion loss performance figures published in this catalogue must not be used for special clean air projects. Please contact nearest Kruger office for further details.

Regenerated Sound Power Level at 7 m/s										
Type	One Octave Band Frequency (Hz)									
	Length	63	125	250	500	1k	2k	4k	8k	10k
KRA 400-150 (Module 275)	600	48	42	31	22	17	11	13	17	31
	900	48	41	32	22	16	10	13	18	29
	1200	48	40	32	22	15	10	13	18	27
	1500	48	39	32	23	13	9	12	19	25
	1800	47	38	32	23	12	8	12	20	22
	2100	47	37	32	23	11	7	12	21	20
	2400	47	37	32	24	9	6	11	21	18
KRA 400-200 (Module 300)	600	49	41	31	22	18	13	15	17	32
	900	49	40	31	22	17	12	14	18	29
	1200	48	39	32	22	16	11	14	18	27
	1500	48	39	32	23	14	11	13	19	25
	1800	48	38	32	23	13	10	13	20	23
	2100	47	37	32	23	12	9	13	21	21
	2400	47	36	32	24	10	8	12	21	19
KRA 400-300 (Module 350)	600	50	40	31	22	20	16	17	17	33
	900	50	40	31	22	18	15	16	18	31
	1200	49	39	32	23	17	15	16	18	28
	1500	49	38	32	23	16	14	16	19	26
	1800	49	37	32	23	14	13	15	20	24
	2100	49	36	32	24	13	12	15	21	22
	2400	48	35	32	24	12	11	15	21	20
KRA 400-350 (Module 375)	600	51	40	31	22	21	18	18	17	33
	900	50	39	31	22	19	17	17	18	31
	1200	50	38	31	23	18	16	17	18	29
	1500	50	38	32	23	17	15	17	19	27
	1800	49	37	32	23	15	15	16	20	25
	2100	49	36	32	24	14	14	16	21	22
	2400	49	35	32	24	13	13	16	21	20
KRA 600-200 (Module 400)	600	49	43	31	22	19	17	18	21	31
	900	49	42	31	22	18	16	18	21	28
	1200	48	41	31	23	17	15	18	22	26
	1500	48	40	31	23	15	14	17	23	24
	1800	48	39	32	23	14	13	17	23	22
	2100	47	38	32	24	13	13	17	24	20
	2400	47	38	32	24	11	12	16	25	17
KRA 600-300 (Module 450)	600	49	42	31	22	19	16	18	20	29
	900	48	42	31	22	19	16	18	21	28
	1200	48	41	32	22	18	16	18	21	26
	1500	47	41	32	23	17	16	17	22	24
	1800	46	40	32	23	16	15	17	23	22
	2100	45	40	32	23	16	15	17	23	20
	2400	44	39	32	23	15	15	17	24	19
KRA 600-400 (Module 500)	600	50	42	31	21	19	16	18	20	28
	900	48	42	32	22	19	16	18	20	27
	1200	47	42	32	22	19	17	18	21	25
	1500	45	41	32	22	19	17	18	21	24
	1800	44	41	32	22	19	17	18	22	23
	2100	42	41	33	23	19	17	17	22	21
	2400	41	41	33	23	18	18	17	23	20
KRA 600-500 (Module 550)	600	50	45	33	24	22	20	21	22	30
	900	50	44	33	24	21	19	20	22	28
	1200	50	44	33	23	20	17	19	22	27
	1500	50	43	32	23	19	16	17	22	25
	1800	50	43	32	23	18	15	16	22	23
	2100	50	42	32	23	17	14	14	22	21
	2400	50	42	32	22	16	12	13	22	19
KRA 600-600 (Module 600)	600	51	48	35	26	25	24	24	24	32
	900	52	47	34	25	23	21	22	24	30
	1200	54	46	33	25	21	18	19	23	28
	1500	55	45	33	24	20	16	17	23	26
	1800	57	44	32	23	18	13	14	22	23
	2100	58	44	31	23	16	10	12	22	21
	2400	60	43	30	22	15	7	9	22	19

Table 7. Regenerated Sound at 7m/s

RECOMMENDED INDOOR DESIGN CRITERIA FOR HVAC SYSTEMS

Room Type	NC	RC(N)	NCB	dB(A)	PNC
Residences, Apartments, Condominiums	25-35	25-35			25-40
Hotels/Motels					
Individual rooms or suites	30-35	30-35	28-38	25-35	30-40
Meeting/banquet rooms	25-30	25-35	25-35		25-35
Halls, corridors, lobbies	35-40	35-40	38-43	45-55	35-45
Service/support areas	40-45	35-45	38-48	45-55	35-45
Offices					
Executive	25-30	25-35	25-30		25-40
Large conference rooms	25-30		25-30	25-35	25-40
Small conference rooms	30-35		30-35	25-35	30-40
Teleconference rooms		≤25			
Private	30-35	30-35	30-35		30-40
Open-plan areas	35-40	30-40	35-40		30-40
Business machines/computers	40-45	40-45	38-43	45-55	35-45
General secretarial areas			38-43		
Public circulations	40-45	40-45	38-48	45-55	35-45
Hospitals and Clinics					
Private rooms	25-30	25-35	25-30	25-30	25-40
Wards	30-35	30-40	30-35	30-35	30-40
Operating rooms	35-40	25-35	25-30		35-45
Laboratories	30-35	30-35	33-43		30-40
Corridors	35-40	30-40	33-43		35-45
Public areas	35-40	30-40	38-43	45-55	35-45
Auditoriums					
Large auditoriums, large drama theaters and large churches (for very good speech articulation)			15-20	25-30	
Concerts and recital halls		15-20	15-20	25-30	10-20
Music teaching studios		≤25			
Music practice rooms		≤35			
Legitimate theaters		20-25	20-25	25-30	
Movie theaters	30-35	30-35	27-37	25-30	30-40
Recording studios		15-20		25-30	
TV studios	25-30	20-25	15-25	25-30	25-35
Churches					
Sanctuaries	25-30	25-30	30-35	25-30	25-35
Schools					
Lecture and classrooms	30-35	25-30	25-30	25-35	30-40
Open-plan classrooms	30-35	35-40	33-37		30-40
Large lecture rooms, without amplification		≤35		25-35	
Laboratories (with fume hoods)					
Testing/research, minimal speech communication		45-55		45-55	
Research, extensive telephone use, speech communication		40-50		45-55	
Group teaching		35-45			
Public Building					
Public Libraries	35-40	30-40	33-37		35-45
Courtrooms	25-30	35-40	33-37	40-45	25-35
Restaurants	35-40	40-45	38-43	45-55	35-45
Shops, garages			50-60	45-55	
Indoor stadiums, Gymnasiums					
Gymnasiums and natatoriums	35-45	40-50		45-55	
Large seating-capacity spaces with speech amplification		45-55		45-55	
Manufacturing Areas					
Light machinery	45-55				
Heavy machinery	50-65				

Table 4 Recommended Indoor Design Criteria

* Note: Above represents general limits of acceptability for typical indoor environment. The values are based on mere judgment and experience without any quantitative evaluates of human reactions.

NOTES

KRUGER GROUP (VENTILATION)

- **THAILAND (Regional HQ)**

KRUGER VENTILATION INDUSTRIES ASIA CO. LTD.
30/159 Moo 1, Sinsakorn Industrial Estate,
Chetsadawithi Road, Khok Kham Mueng, Samuthsakorn 74000, Thailand
Tel. +662 1054298 - Fax +662 0248256 to 9
Website: www.krugerfan.com

- **CHINA (BEIJING)**

BEIJING KRUGER VENTILATION CO. LTD
Level 7, A Block, Rising International Building, 29 JingHai San Road, BDA,
Beijing, P.R.China 100176
Tel. +86 10-67881366 - Fax +86 10-67880566
Email: krugertj@krugertj.com

- **CHINA (SHANGHAI)**

SHANGHAI KRUGER VENTILATION CO. LTD
No. 500 Yuanguo Road, Anting, Jiading,
Shanghai 201814 P.R. China
Tel. +86 21-69573266 - Fax +86 21-69573296
Email: shkruger@krugerchina.com

- **CHINA (WUHAN)**

WUHAN KRUGER VENTILATION CO. LTD
No. 805, Huian Ave, Dongxihu District, Wuhan, Hubei, P.R. China 430000
Tel. +86 27- 83248840/83060522/83097505
Fax +86 27- 83261886
Email: whkruger@krugerwh.com

- **HONG KONG**

KRUGER VENTILATION (HONG KONG) LIMITED
Flat C, 9/F, Yeung Yiu Chung (No.8) Industrial Building,
20 Wang Hoi Road, Kowloon Bay, Kowloon, Hong Kong
Tel. +852 22469182 - Fax +852 22469187
Email: info@kruger.com.hk

- **INDIA (NORTH)**

KRUGER VENTILATION INDUSTRIES (NORTH INDIA) PVT LTD
Plot No. - 191, Sector - 59, Ballabgarh, Faridabad - 121 004, Haryana, India
Tel. +91-9958991660/9717449696
Fax. +91-1294135820
Email: sales.kni@krugerindia.com

- **KOREA**

NEOMATE CO. LTD
2-1010, Ace High Tech City B/D, 775 Gyeongin-ro,
Yeongdeungpo-gu, Seoul, Korea. Postal Code 07299
Tel. +82-2-2679-2052 - Fax. +82-2-2679-2174
Email: y7890@neomate.co.kr

- **MYANMAR**

KRUGER VENTILATION (MYANMAR) CO.LTD
Room No. F21, Thiri Yadanar Whole Sale Market, (Htawunbe)
Toe Chae Ward, North Okkalapa Township, Yangon.
Tel. +959 763141081/2/3
Email: htoon@krugermm.com

- **SINGAPORE**

KRUGER ENGINEERING PTE LTD
No. 10 Buroh Street #06-06, West Connect Building,
Singapore 627564
Tel. +65 68631191 - Fax +65 68631151
Email: mktg@krugerasia.com

- **THAILAND**

KRUGER VENTILATION IND. (THAILAND) CO. LTD
30/105 Moo 1, Sinsakorn Industrial Estate,
Chetsadawithi Road, Khok Kham Mueng, Samuthsakorn 74000, Thailand
Tel. +662 1050399 - Fax + 662 1050370-2
Email: mktg@kruger.co.th

- **AUSTRALIA**

S&P-KRUGER AUSTRALIA PTY LTD
2 Cunningham St, Moorebank N.S.W. 2170
Tel. +61 2-98227747
Fax. +61 2-98227757
Email: info@sandpkruger.com.au

- **CHINA (GUANGZHOU)**

GUANGZHOU KRUGER VENTILATION CO. LTD
No. 9 Huahui Road, Huashan, Huadu,
Guangzhou, P.R. China 510880
Tel. +86 20-66356635 - Fax +86 20-86786001/86786500
Email: gzkruger@krugergz.com

- **CHINA (TIANJIN)**

TIANJIN KRUGER VENTILATION CO. LTD
No.168 Anyuan Road, Jingjin Science and Technology Park
Wuqing District, Tianjin, China
Tel. +86 22-22143480/3481 - Fax +86 22-22143482
Email: krugertj@krugertj.com

- **DUBAI**

KRUGER VENTILATION INDUSTRIES, GULF BRANCH
Jebel Ali Free Zone Area (JAFZA) P.O. Box No. 262949, Dubai, UAE
Tel. +971 4 8819188/8832017
Fax. +971 4 8832018
Email: johncs@krugerasia.com

- **INDIA**

KRUGER VENTILATION INDUSTRIES (INDIA) PVT LTD
Kruger Centre, Mumbai-Nasik Highway,
Kalamgaon, Shahapur, Thane 421601, Maharashtra, India
Tel. +91 9960558899/9975577211 - Fax +91 2527 240075
Email: sales@krugerindia.com

- **INDONESIA**

P.T. KRUGER VENTILATION INDONESIA
JL. Teuku Umar No.20,
Karawaci - Tangerang 15115, Indonesia
Tel. +62 21-5512288/5513557 - Fax +62 21-5513502
Email: mktg@krugerindo.co.id

- **MALAYSIA**

KRUVENT INDUSTRIES (M) SDN BHD
Lot 850, Jalan Subang 7, Taman Perindustrian Subang,
47500, Subang Jaya, Selangor D.E.
Tel. +603 80743399 - Fax +603 80743388
Email: mktg@kruger.com.my

- **PHILIPPINES**

KRUGER M&E INDUSTRIES CORPORATION
FAPI Compound, E. Rodriguez Ave.
Tunasan, Muntinlupa City 1773, Philippines
Tel. +63 2-8622892/4/6/7, 5534059 - Fax +63 2-8622891
Email: mktg@krugerph.net

- **TAIPEI**

KRUGER VENTILATION (TAIWAN) CO. LTD
No. 157, Ping-an Rd, Hengfeng Village,
Dayuan Shiang Taoyuan County 337, Taiwan
Tel. +886 3-3859119 - Fax +886 3-3859118
Email: sales@krugertwn.com.tw

- **VIETNAM**

KRUGER VENTILATION INDUSTRIES (VIETNAM) CO. LTD
Lot A7. 2-4, C2 Road, Thanh Thanh Cong IZ,
Trang Bang Dist. Tay Ninh Province, Vietnam
Tel. +84-276 3585200/01/02 - Fax +84-276 3585199
Email: mktg@krugervn.com

The company is always improving and developing its products, therefore the company reserves the right of making changes to the illustrated products.
Certified dimension can be provided upon request.

Edition 7
Printed in May 2019

Kruger Ventilation Industries Asia Co., Ltd
30/159 Moo 1, Sinsakorn Industrial Estate
Chetsadawithi Road, Khok Kham Mueng,
Samuthsakorn 74000, Thailand
Tel. +662 1054298 - Fax. +662 0248256-9
Website:www.krugerfan.com

CNo. – CAT014.E1 May 2019

A member of
Soler&Palau Ventilation Group